PHOTOFACT* Folder

*TRADE MARK

# ADMIRAL CHASSIS 22A3, A, AZ, Z, 22B3AZ, Z, 22G2, Z, 22N2

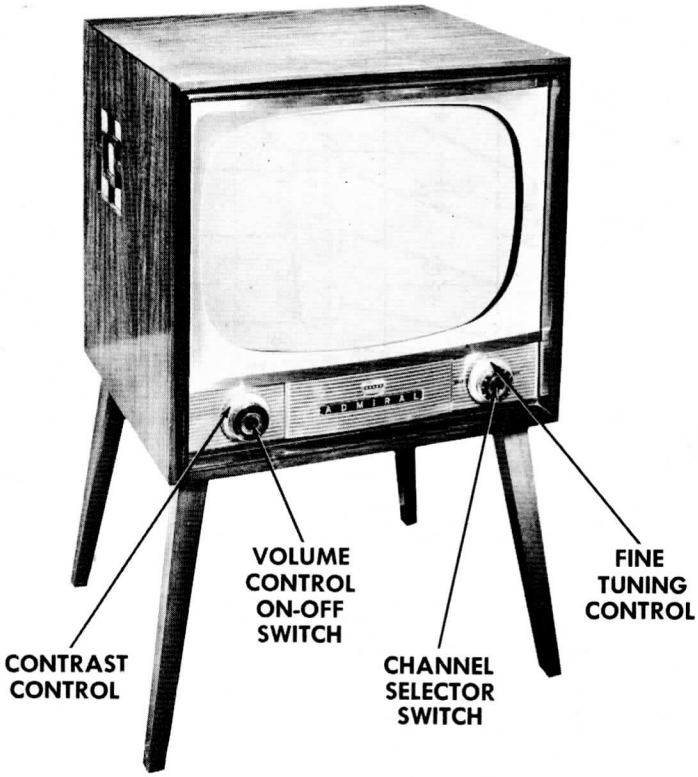


ADMIRAL MODEL T2236Z

| TRADE NAME | Admiral | MODELS | CHASSIS |
|---|---|---|---|
| | | CU2225Z, CU2226Z, CU2227Z | 22B3Z |
| | | C2225Z, C2226Z, C2227Z | 22A3Z |
| | | FU2216Z, FU2217Z, FU2218Z | 22B3Z |
| | | FU2216Z, F2217Z, F2218Z | 22A3Z |
| | | TU2232 | 22G2 |
| | | TU2232Z | 22G2Z |
| | | TU2236Z, TU2237Z | 22B2Z |
| | | T2236Z | 22A3Z or 22A3AZ |
| | | T2237Z, T2239Z | 22A3Z |
| | | | 22A3 |
| | | | 22A3AZ |
| | | | 22B3AZ |
| | | | 22N2 |

| | |
|---|---|
| MANUFACTURER | Admiral Corp., 3800 W. Cortland St., Chicago 47, Ill. |
| TYPE SET | Television Receiver |
| TUBES | Twenty-two |
| POWER SUPPLY | 110-120 Volts AC-60 Cycles RATING 1.72 Amp. @ 117 Volts AC |
| TUNING RANGE | Channels 2 thru 13 VHF, 14 thru 83 UHF, Video IF 25.75MC, Sound IF 21.25MC (Intercarrier) |

## INDEX


Alignment Instructions ..... 6, 7
Disassembly Instructions ..... 18
Horizontal Sweep Circuit Adjustments ..... 11
Parts List and Descriptions ..... 13 thru 16
Photographs
- Cabinet-Rear View ..... 11
- Capacitor Identification ..... 4, 9
- Chassis-Top View ..... 3
- RF Tuner ..... 10
- Resistor Identification ..... 19, 20

Photographs (Cont)
- Trans., Inductor & Alignment Identification ..... 16

Resistance Measurements ..... 8
Servicing in the Field ..... 18
Schematic (TV) ..... 2
Schematic (UHF Tuner) ..... 17
Trouble Shooting Aids ..... 12, 17
Tube Failure Check Chart ..... 5
Tube Placement Chart (Bottom View) ..... 8
Tube Placement Chart (Top View) ..... 5



**HOWARD W. SAMS & CO., INC. • Indianapolis 5, Indiana**



"The listing of any available replacement part herein does not constitute in any case a recommendation, warranty or guaranty by Howard W. Sams & Co., Inc., as to the quality and suitability of such replacement part. The numbers of these parts have been compiled from information furnished to Howard W. Sams & Co., Inc., by the manufacturers of the particular type of replacement part listed." "Reproduction or use, without express permission, of editorial or pictorial content, in any manner, is prohibited. No patent liability is assumed with respect to the use of the information contained herein. Copyright 1954 by Howard W. Sams & Co., Inc., Indianapolis 5, Indiana, U. S. of America. Copyright under International Copyright Union. All rights reserved under Inter-American Copyright Union (1910) by Howard W. Sams & Co., Inc." Printed in U. S. of America



DATE 12-54 SET 260 FOLDER 2



ADMIRAL CHASSIS 22A3, A, AZ, Z, 22B3AZ, Z, 22G2, Z, 22N2

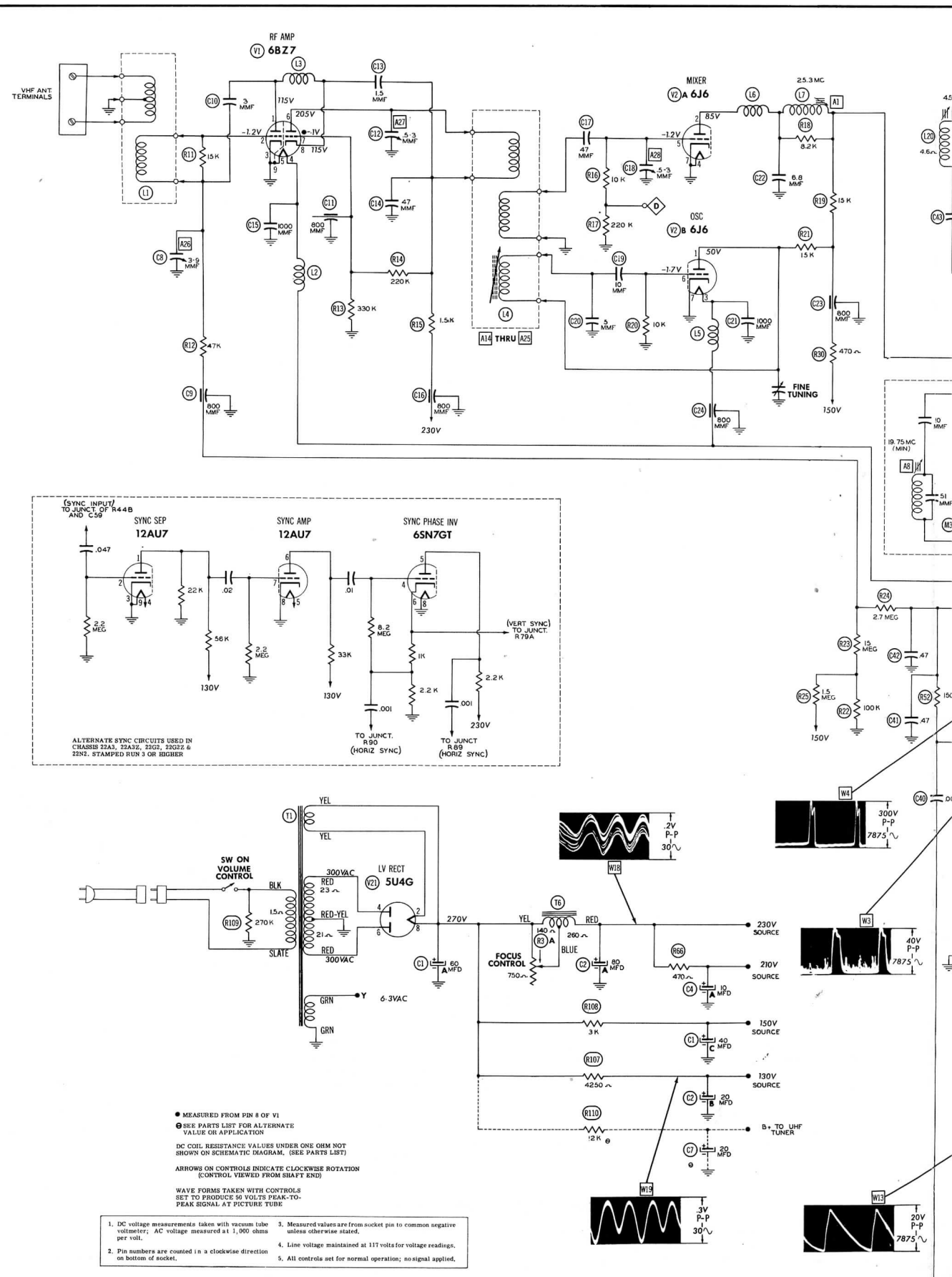


A PHOTOFACT STANDARD NOTATION SCHEMATIC

© Howard W. Sams & Co., Inc. 1954

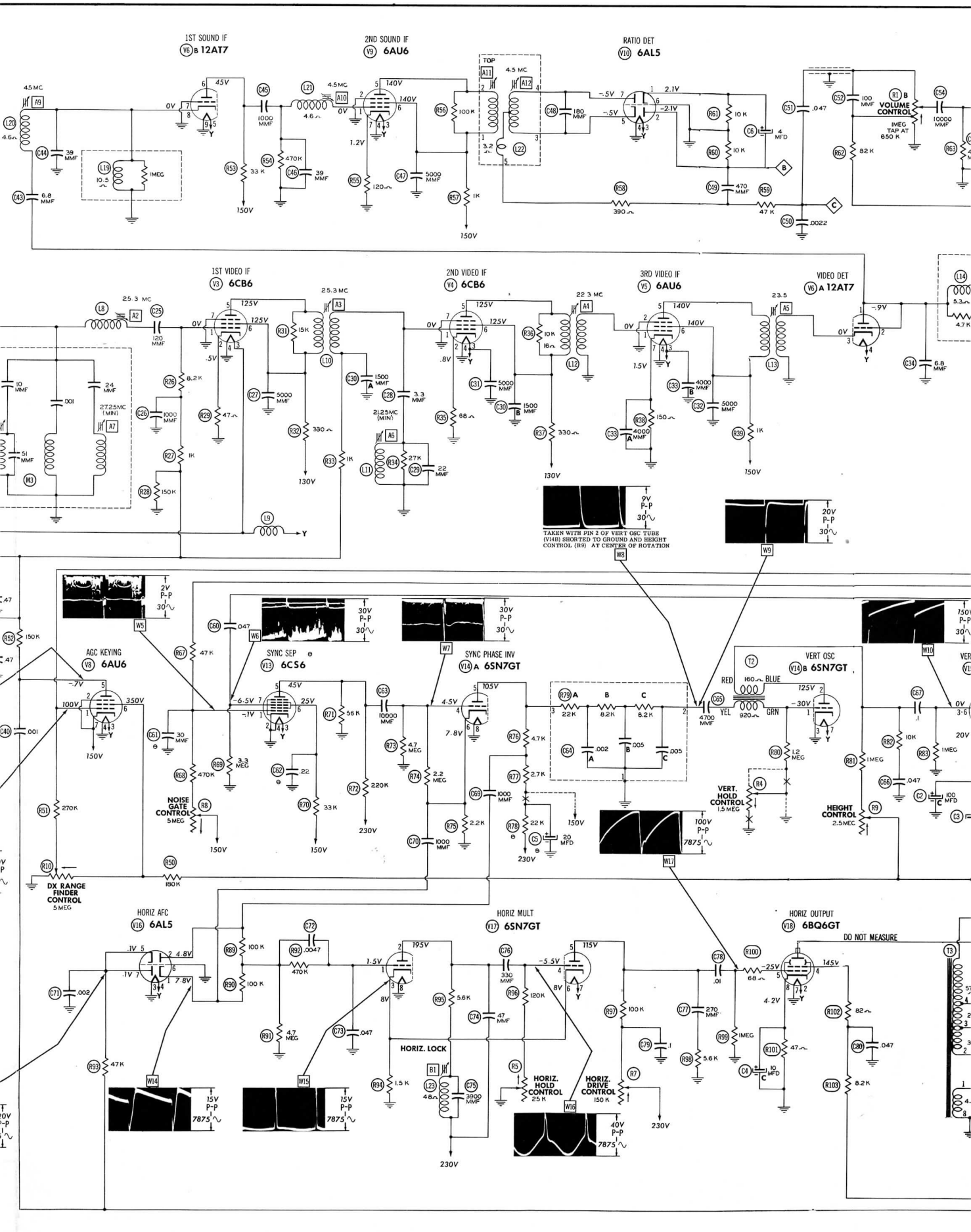
1ST SOUND IF
V6 B 12AT7
2ND SOUND IF
V9 6AU6
RATIO DET
V10 6AL5
VOLUME CONTROL
1ST VIDEO IF
V3 6CB6
2ND VIDEO IF
V4 6CB6
3RD VIDEO IF
V5 6AU6
VIDEO DET
V6 A 12AT7
TAKEN WITH PIN 2 OF VERT OSC TUBE (V14B) SHORTED TO GROUND AND HEIGHT CONTROL (R9) AT CENTER OF ROTATION
AGC KEYING
V8 6AU6
SYNC SEP
V13 6CS6
SYNC PHASE INV
V14 A 6SN7GT
VERT OSC
V14 B 6SN7GT
NOISE GATE CONTROL
DX RANGE FINDER CONTROL
VERT. HOLD CONTROL
HEIGHT CONTROL
HORIZ AFC
V16 6AL5
HORIZ MULT
V17 6SN7GT
HORIZ OUTPUT
V18 6BQ6GT
DO NOT MEASURE
HORIZ. LOCK
HORIZ. HOLD CONTROL
HORIZ. DRIVE CONTROL

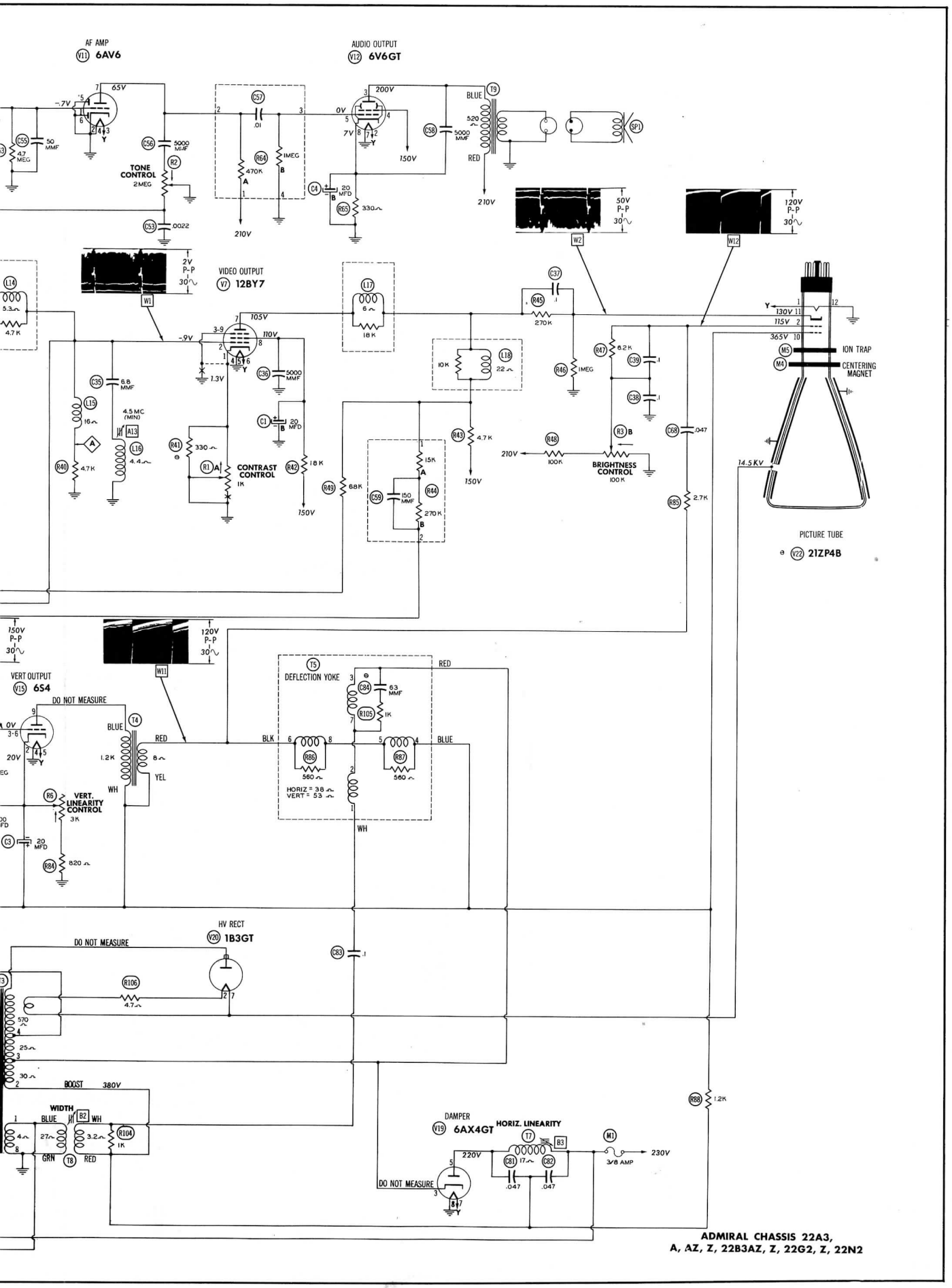


ADMIRAL CHASSIS 22A3,
A, AZ, Z, 22B3AZ, Z, 22G2, Z, 22N2

## CHASSIS TOP VIEW

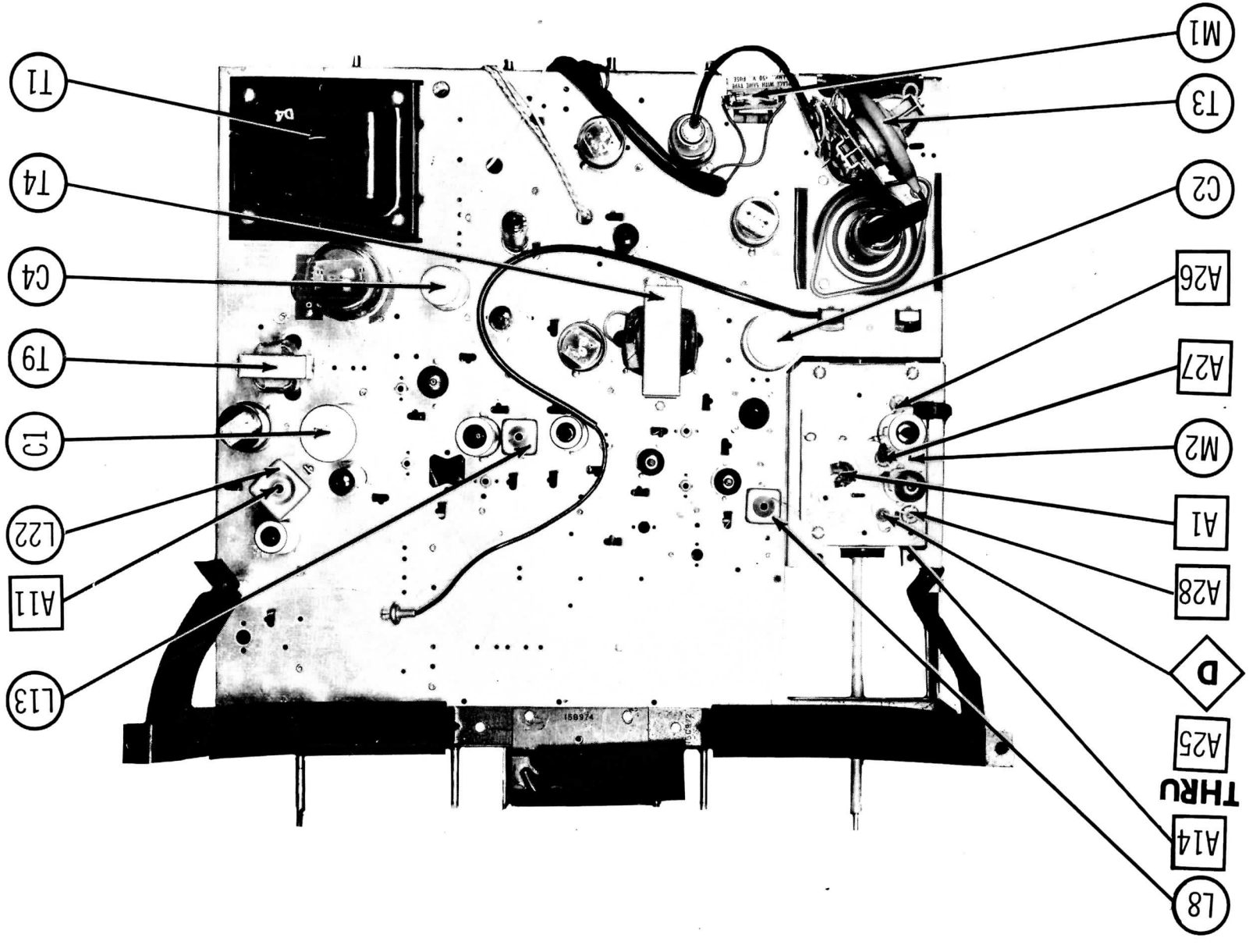

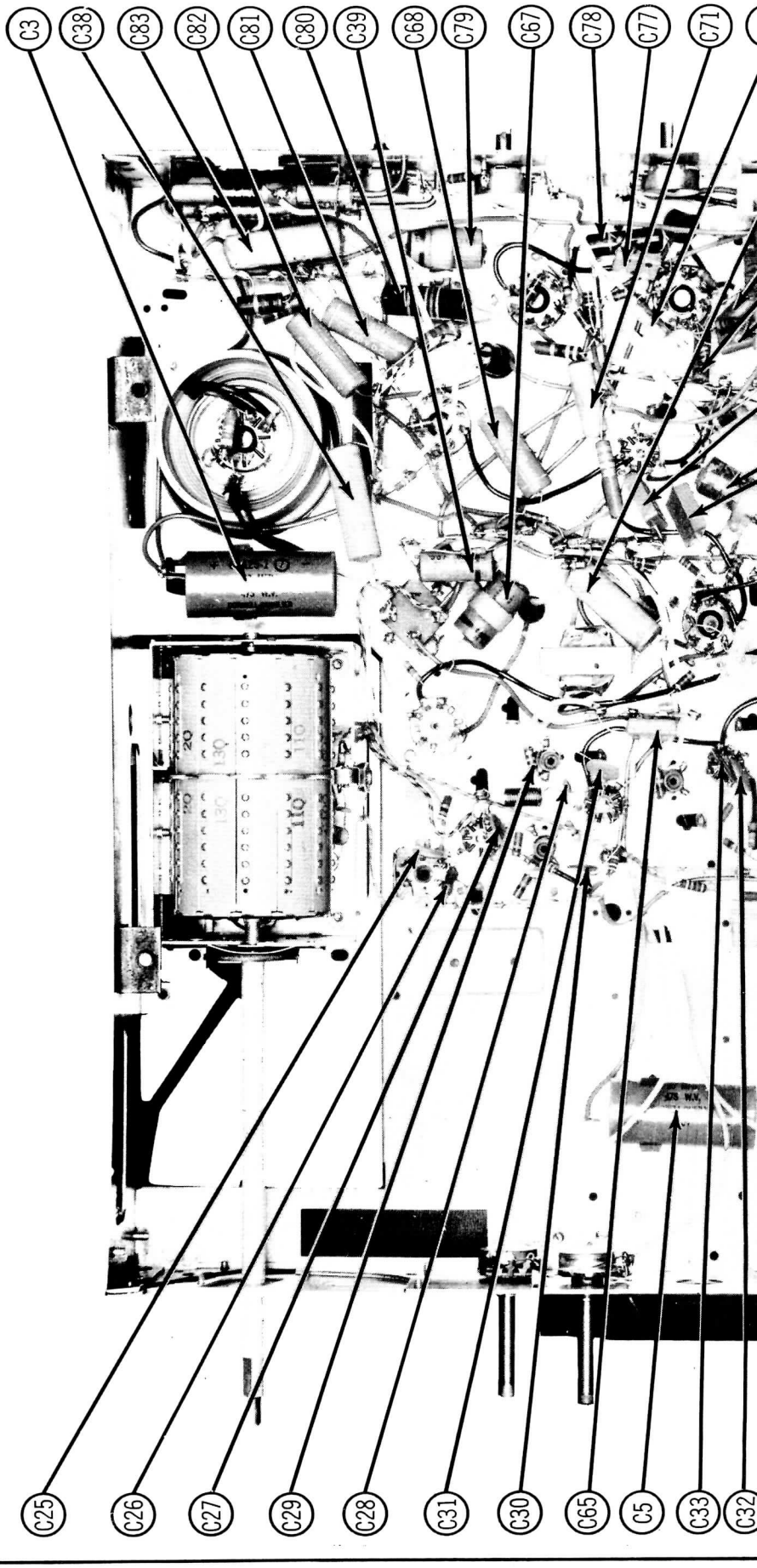
C3
C38
C83
C82
C81
C80
C39
C68
C79
C67
C78
C77
C71
C25
C26
C27
C29
C28
C31
C30
C65
C5
C33
C32

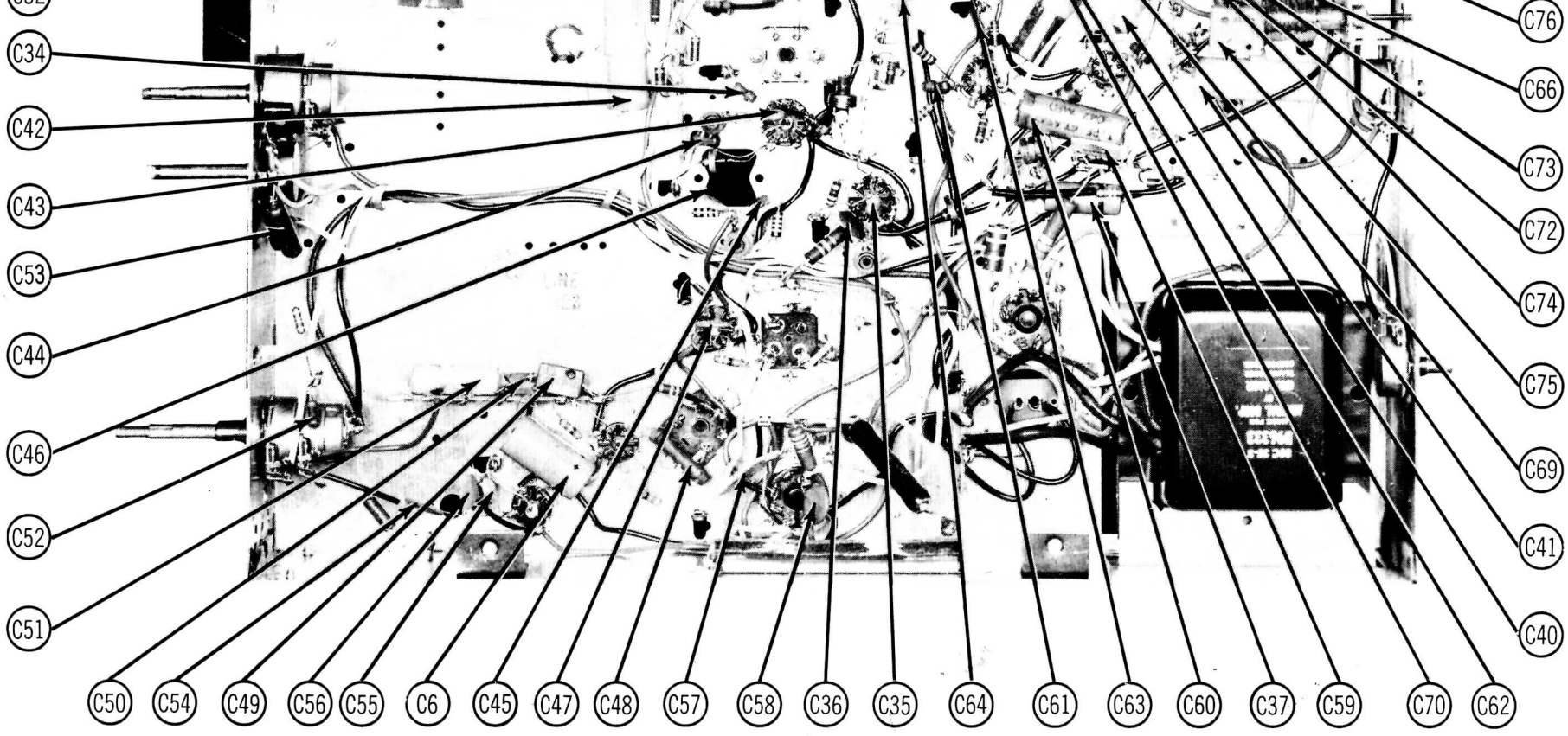


CHASSIS BOTTOM VIEW-CAPACITOR IDENTIFICATION

ADMIRAL
CHASSIS 22A3, A, AZ, Z, 22B3AZ, Z, 22G2, Z, 22N2

# TUBE PLACEMENT CHART

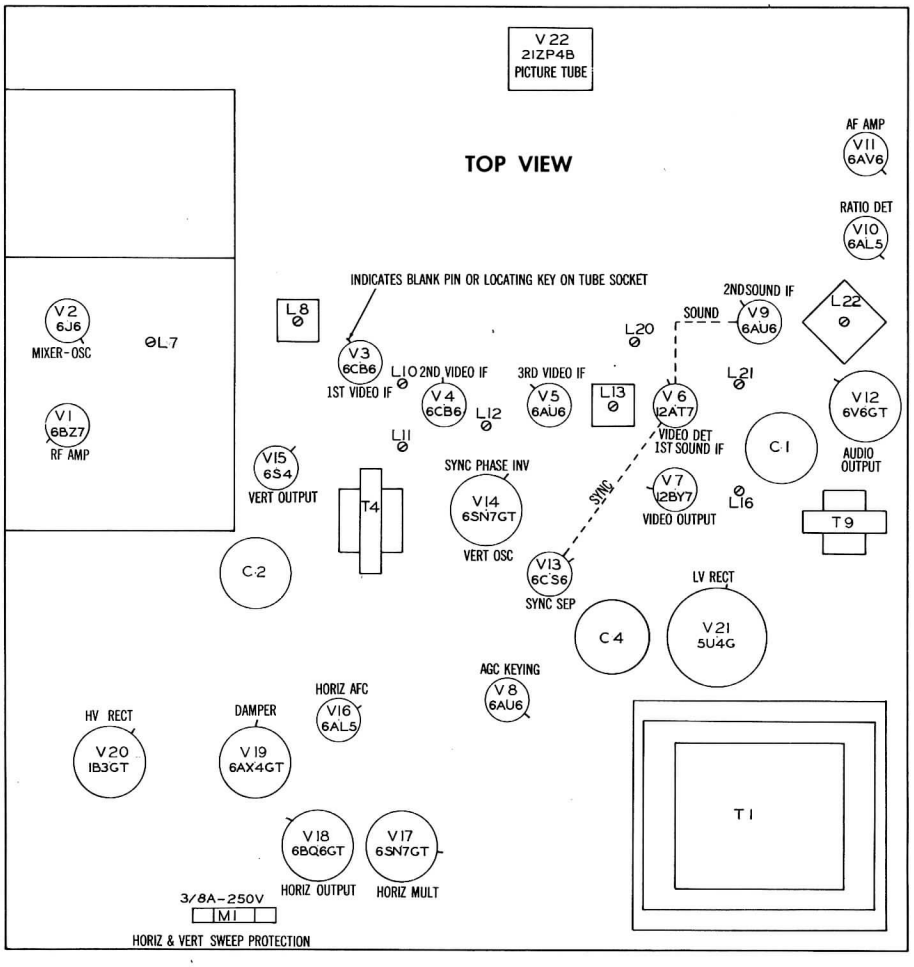


# TUBE FAILURE CHECK CHART

The following chart lists tubes whose failures are most likely to produce the indicated symptoms. Refer to tube placement chart for location and type of tube.

POWER SUPPLY FAILURE
No raster, no sound - V21

LOSS OF PICTURE OR SOUND
No pic, no sound, has raster - V2, V3, V4, V5, V6
No pic, no sound, has snow - V1, V2, V3
No pic, has sound, has raster - V7, V8, V22
Has pic, no sound - V6, V9, V10, V11, V12
Overloaded picture - V8

SYNC FAILURE
No vert. sync - V14
No horiz. sync - V14, V16, V17
No vert. or horiz. sync - V13, V14

SWEEP FAILURE
No raster, has sound - V17, V18, V19, V20, V22, Fuse (M1)
No vertical deflection - V14, V15
Poor vert. linearity or foldover - V14, V15
Poor horiz. linearity or foldover - V17, V18, V19
Narrow picture - V17, V18, V19, V20, V21
Vert. off freq. - V14
Horiz. off freq. - V14, V16, V17

# ALIGNMENT INSTRUCTIONS

**ALIGNMENT INSTRUCTIONS—READ CAREFULLY BEFORE ATTEMPTING ALIGNMENT**

The high voltage lead should be securely taped and kept away from the chassis. Do not remove the horizontal oscillator tube (V17) to disable the high voltage. Allow a 15 minute warm-up period for receiver and test equipment.

**VIDEO IF ALIGNMENT**

Remove the converter tube (V2) from its socket and replace with a 6J6 which has pin 1 removed. This will disable the local oscillator and reduce the possibility of erroneous indications.
Connect the negative lead of a 4.5 volt bias supply to the ungrounded side of C42. Connect the positive lead to chassis.
Disconnect the antenna and short the antenna terminals with a short jumper wire.
Set the contrast control for minimum contrast.

| | DUMMY ANTENNA | SIGNAL GENERATOR COUPLING | SIGNAL GENERATOR FREQUENCY | CHANNEL | CONNECT VTVM | ADJUST | REMARKS |
|---|---|---|---|---|---|---|---|
| 1. | Direct | High side to an ungrounded tube shield floating over dummy converter tube. Low side to chassis. | 25.3MC (Unmod) | Any unused high band channel | DC probe thru decoupling filter (Fig.1) to point Ⓐ. Common to chassis. | A1, A2, A3 | Attenuate generator output to maintain not more than 1 volt at VTVM. Adjust for maximum deflection. |
| 2. | " | " | 22.3MC | " | " | A4 | " |
| 3. | " | " | 23.5MC | " | " | A5 | " |
| 4. | " | " | 21.25MC | " | " | A6 | Adjust for MINIMUM deflection. |
| 5. | " | " | 27.25MC | " | " | A7 | Reduce bias from 4.5 volts to 1.5 volts. Adjust for MINIMUM deflection. |
| 6. | " | " | 19.75MC | " | " | A8 | " |
| 7. | " | " | 25.3MC | " | " | | Increase bias to 4.5 volts. Retouch A1, A2 and A3 for maximum deflection. |

**OVERALL VIDEO IF RESPONSE CHECK**

Connect 4.5 volt bias battery as under "Video IF Alignment". Set contrast control for minimum contrast.
Connect the synchronized sweep voltage from the sweep generator to the horizontal input of the oscilloscope for horizontal deflection.

| | DUMMY ANTENNA | SWEEP GENERATOR COUPLING | SWEEP GENERATOR FREQUENCY | MARKER GENERATOR FREQUENCY | CHANNEL | CONNECT SCOPE | ADJUST | REMARKS |
|---|---|---|---|---|---|---|---|---|
| 8. | Direct | High side to an ungrounded tube shield floating over dummy converter tube. Low side to chassis. | 24MC (10MC Swp) | 21.25MC<br>22.0MC<br>24.3MC<br>25.0MC<br>25.75MC | Any Unused High Band Channel | Vert. Amp. thru decoupling filter (Fig.1) to point Ⓐ. Low side to chassis. | | Use only enough sweep generator output to provide usable pattern on scope. Check for response curve similar to Fig. 2. If necessary, retouch A1 thru A5 to obtain desired response. |

**SOUND IF ALIGNMENT USING AM SIGNAL GENERATOR AND VTVM**

| | DUMMY ANTENNA | SIGNAL GENERATOR COUPLING | SIGNAL GENERATOR FREQUENCY | CHANNEL | CONNECT VTVM | ADJUST | REMARKS |
|---|---|---|---|---|---|---|---|
| 9. | .01MFD | High side to pin 1 (plate) of 12AT7 (V6A). Low side to chassis. | 4.5MC (Unmod) | Any | DC probe to point Ⓑ. Common to chassis. | A9, A10, A11 | Attenuate generator output to maintain 1 volt at VTVM. Adjust for maximum deflection. |
| 10. | " | " | " | " | DC probe to point Ⓒ. Common to chassis. | A12 | Adjust for zero reading. A positive and negative reading will be obtained on either side of the correct setting. Final adjustment of A12 may be made by tuning in a TV station and adjusting A12 for clearest sound and minimum buzz. |

**SOUND IF ALIGNMENT USING FM SIGNAL GENERATOR AND OSCILLOSCOPE**

Use frequency modulated signal with 60~ modulation and 450KC sweep. Use 120~ sawtooth voltage in scope for horizontal deflection.

| | DUMMY ANTENNA | SWEEP GENERATOR COUPLING | SWEEP GENERATOR FREQUENCY | MARKER GENERATOR FREQUENCY | CHANNEL | CONNECT SCOPE | ADJUST | REMARKS |
|---|---|---|---|---|---|---|---|---|
| 9. | .01MFD | High side to pin 1 (plate) of 12AT7 (V6A). Low side to chassis. | 4.5MC (450KC Swp) | 4.5MC | Any | Vert. Amp. to point Ⓑ. Low side to chassis. | A9, A10, A11 | Disconnect stabilizing capacitor C6. Adjust for curve of maximum amplitude and symmetry similar to Fig. 3. |
| 10. | " | " | " | " | " | Vert. Amp. to point Ⓒ. Low side to chassis. | A12 | Reconnect stabilizing capacitor C6. Adjust so that 4.5MC occurs at center of crossover lines as in Fig. 4. SLIGHTLY retouch A11 for maximum amplitude and straightness of crossover lines. |

**4.5MC TRAP ALIGNMENT**

Connect a 10MFD capacitor from the plate of the video amplifier (V7) to the cathode of the first sound IF amplifier (V6B).

| | DUMMY ANTENNA | SIGNAL GENERATOR COUPLING | SIGNAL GENERATOR FREQUENCY | CHANNEL | CONNECT VTVM | ADJUST | REMARKS |
|---|---|---|---|---|---|---|---|
| 11. | .01MFD | High side to pin 1 (plate) of 12AT7 (V6A) Low side to chassis. | 4.5MC (Unmod) | Any | DC probe to point Ⓑ. Common to chassis. | A13 | Adjust for MINIMUM deflection. Remove 10MFD capacitor from plate of V7 to cathode of V6B. |

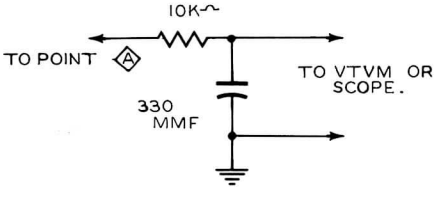


FIG.1

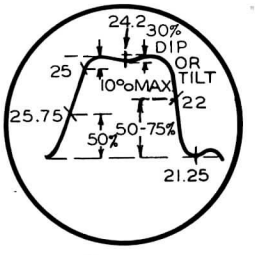


FIG. 2

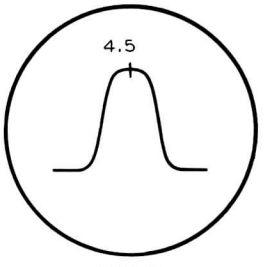


FIG. 3

# ALIGNMENT INSTRUCTIONS (cont)

ALTERNATE 4.5MC TRAP ALIGNMENT

Tune in a TV station and adjust A13 for minimum 4.5MC beat interference in the picture.

VHF OSCILLATOR ALIGNMENT

Remove the dummy converter tube and replace the original 6J6 in its socket.
The channel oscillator adjustment screws are reached through a hole just to the right of the channel switch shaft. The correct adjustment screw is accessible through this hole as the channel switch is turned to each channel. Leave the bias battery connected as under "Overall Video IF Response Check".
Connect the synchronized sweep voltage from the sweep generator to the horizontal input of the oscilloscope for horizontal deflection.
The sweep generator output lead should be terminated with its characteristic impedance, usually 50 ohms.
Set the fine tuning control to the mid-position of its range.

| | DUMMY ANTENNA | SWEEP GENERATOR COUPLING | SWEEP GENERATOR FREQUENCY | MARKER GENERATOR FREQUENCY | CHANNEL | CONNECT SCOPE | ADJUST | REMARKS |
|---|---|---|---|---|---|---|---|---|
| 12. | Two 120Ω Carbon Resistors | Across antenna terminals with 120Ω in each lead. | 213MC (10MC Swp) | 211.25MC 215.75MC | 13 | Vert. Amp. thru decoupling filter (Fig 1) to point Ⓐ. Low side to chassis. | A14 | Adjust to place sound marker in trap notch as in Fig. 4. Video marker should be at 50%. |
| | | | 207MC (10MC Swp) | 205.25MC 209.75MC | 12 | | A15 | |
| | | | 201MC (10MC Swp) | 199.25MC 203.75MC | 11 | | A16 | |
| | | | 195MC (10MC Swp) | 193.25MC 197.75MC | 10 | | A17 | |
| | | | 189MC (10MC Swp) | 187.25MC 191.75MC | 9 | | A18 | |
| | | | 183MC (10MC Swp) | 181.25MC 185.75MC | 8 | | A19 | |
| | | | 177MC (10MC Swp) | 175.25MC 179.75MC | 7 | | A20 | |
| | | | 85MC (10MC Swp) | 83.25MC 87.75MC | 6 | | A21 | |
| | | | 79MC (10MC Swp) | 77.25MC 81.75MC | 5 | | A22 | |
| | | | 69MC (10MC Swp) | 67.25MC 71.75MC | 4 | | A23 | |
| | | | 63MC (10MC Swp) | 61.25MC 65.75MC | 3 | | A24 | |
| | | | 57MC (10MC Swp) | 55.25MC 59.75MC | 2 | | A25 | |

VHF RF AND MIXER ALIGNMENT

Leave the bias battery connected as under "Overall Video IF Response Check". If a usable indication cannot be obtained on the scope, remove the bias battery and short the ungrounded side of C42 to chassis with a short jumper.
Connect the synchronized sweep voltage from the sweep generator to the horizontal input of the oscilloscope for horizontal deflection.
The sweep generator output lead should be terminated with its characteristic impedance, usually 50 ohms.

| | DUMMY ANTENNA | SWEEP GENERATOR COUPLING | SWEEP GENERATOR FREQUENCY | MARKER GENERATOR FREQUENCY | CHANNEL | CONNECT SCOPE | ADJUST | REMARKS |
|---|---|---|---|---|---|---|---|---|
| 13 | Two 120Ω carbon resistors | Across antenna terminals with 120Ω in each lead | 195MC (10MC Swp) | 193.25MC 197.75MC | 10 | Vert. amp. thru 10KΩ to point Ⓓ. Low side to tuner chassis. | A26, A27, A28 | Adjust for response curve similar to Fig 6 with markers above 90% |
| 14 | " | " | 213MC (10MC Swp) | 211.25MC 215.75MC | 13 | " | | Check for response similar to Fig 6 if markers fall below 70% on any channel. Make compromise adjustments of A26, A27 and A28 with channel switch set to that channel. Recheck all other channels to see that they have not been seriously affected. |
| | | | 207MC (10MC Swp) | 205.25MC 209.75MC | 12 | | | |
| | | | 201MC (10MC Swp) | 199.25MC 203.75MC | 11 | | | |
| | | | 189MC (10MC Swp) | 187.25MC 191.75MC | 9 | | | |
| | | | 183MC (10MC Swp) | 181.25MC 185.75Mc | 8 | | | |
| | | | 177MC (10MC Swp) | 175.25MC 179.75MC | 7 | | | |
| | | | 85MC (10MC Swp) | 83.25MC 87.75MC | 6 | | | |
| | | | 79MC (10MC Swp) | 77.25MC 81.75Mc | 5 | | | |
| | | | 69MC (10MC Swp) | 67.25MC 71.75MC | 4 | | | |
| | | | 63MC (10Mc Swp) | 61.25MC 65.75MC | 3 | | | |
| | | | 57MC (10MC Swp) | 55.25MC 59.75MC | 2 | | | |

UHF TUNER ALIGNMENT

The UHF tuner portion of this receiver has been properly aligned at factory and is very stable. If major repair or alignment of the UHF tuner becomes necessary the entire UHF tuner should be returned to the factory service department.

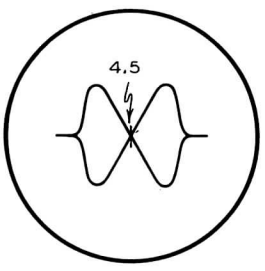


FIG. 4

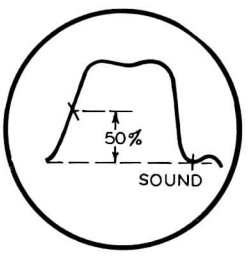


FIG. 5

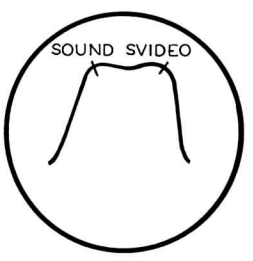


FIG. 6

# TUBE PLACEMENT CHART

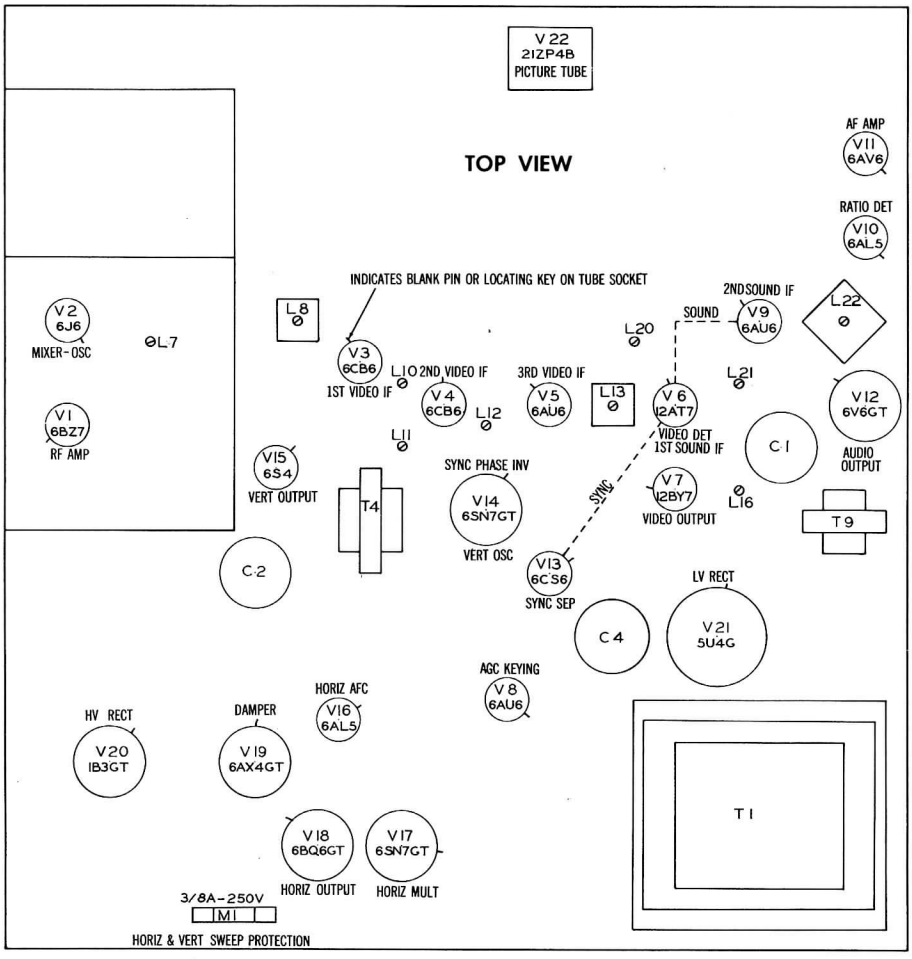


# TUBE FAILURE CHECK CHART

The following chart lists tubes whose failures are most likely to produce the indicated symptoms. Refer to tube placement chart for location and type of tube.

POWER SUPPLY FAILURE
No raster, no sound - V21

LOSS OF PICTURE OR SOUND
No pic, no sound, has raster - V2, V3, V4, V5, V6
No pic, no sound, has snow - V1, V2, V3
No pic, has sound, has raster - V7, V8, V22
Has pic, no sound - V6, V9, V10, V11, V12
Overloaded picture - V8

SYNC FAILURE
No vert. sync - V14
No horiz. sync - V14, V16, V17
No vert. or horiz. sync - V13, V14

SWEEP FAILURE
No raster, has sound - V17, V18, V19, V20, V22, Fuse (M1)
No vertical deflection - V14, V15
Poor vert. linearity or foldover - V14, V15
Poor horiz. linearity or foldover - V17, V18, V19
Narrow picture - V17, V18, V19, V20, V21
Vert. off freq. - V14
Horiz. off freq. - V14, V16, V17

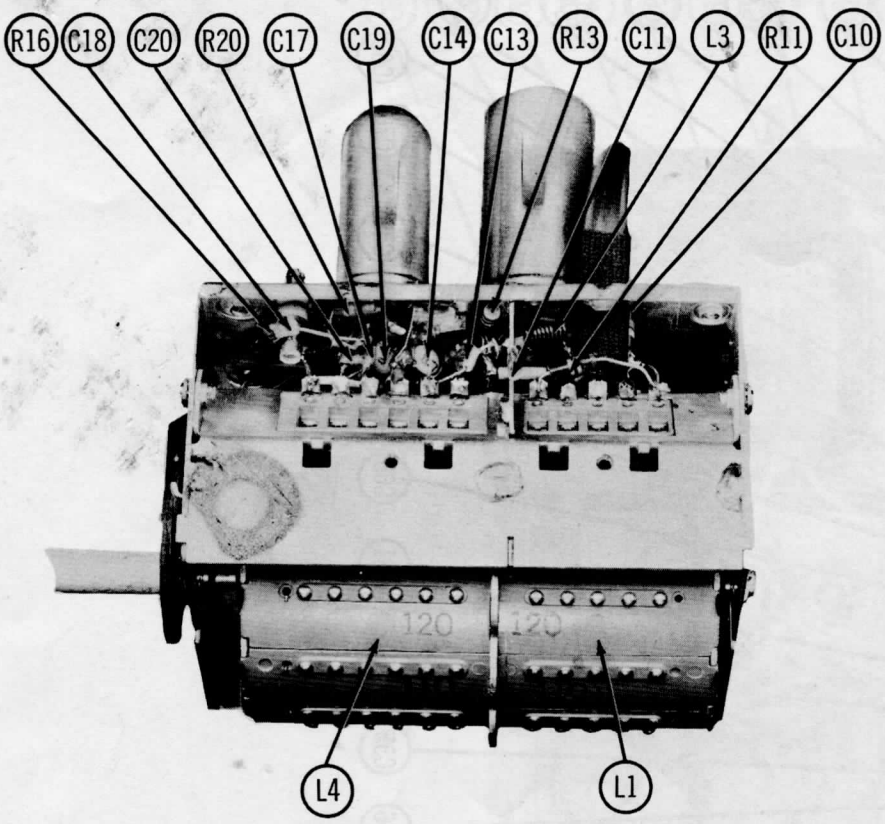


**RF TUNER-RIGHT SIDE**

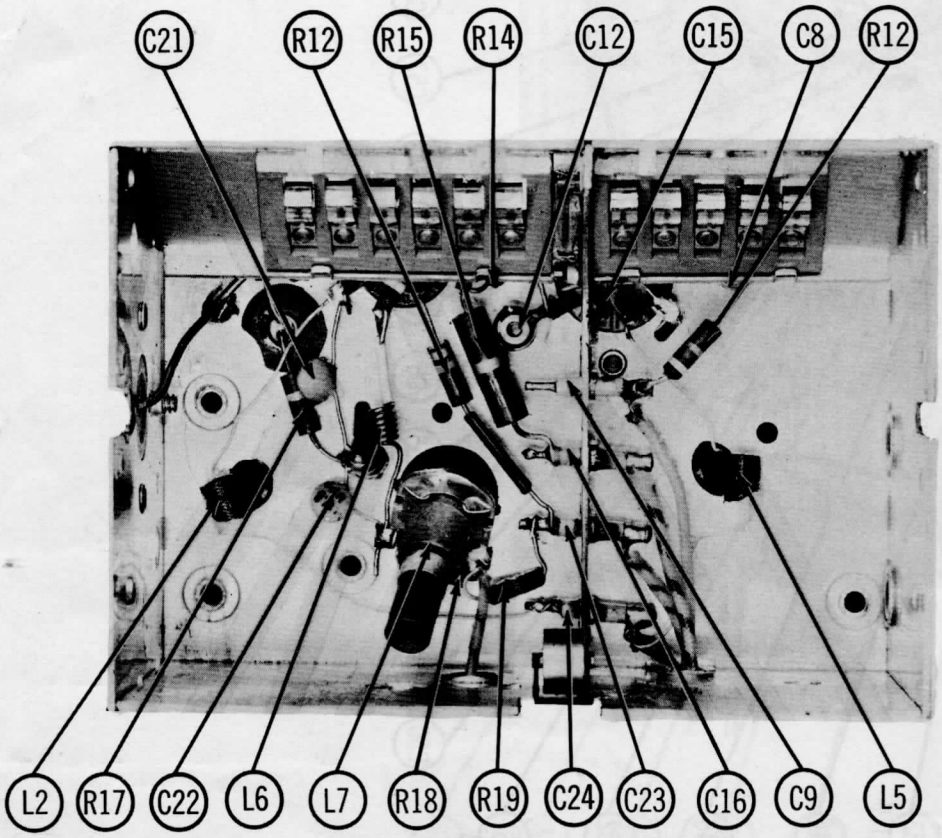


**RF TUNER-BOTTOM VIEW**

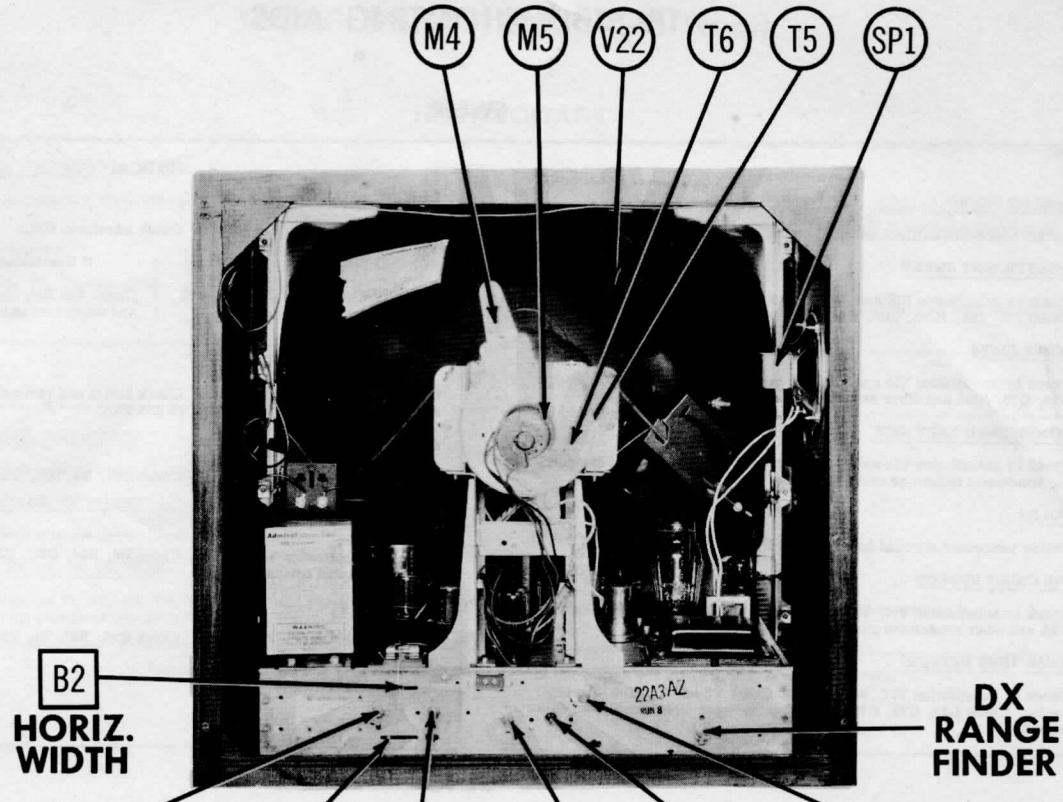


## CABINET—REAR VIEW

## HORIZONTAL SWEEP CIRCUIT ADJUSTMENTS

1. Turn the set on and tune in a TV station, preferably a test pattern. Set the DX range finder control as near the "zero" position as possible consistent with satisfactory pictures.
2. Set the brightness control below average setting. Turn contrast control and horizontal hold control fully counter clockwise.
3. Turn the horizontal drive control fully clockwise.
4. Turn the horizontal lock slug (B1) clockwise until the picture loses sync. It may be necessary to switch off channel, then back again for picture to lose sync.
5. Turn B1 slowly counter clockwise until picture just falls into sync.
6. Switch to an unused channel. If vertical white line (S) appear near the center of screen slowly rotate the horizontal drive control counter clockwise until the white line (S) just disappear.
7. If in step 6 the horizontal drive control was readjusted tune in a station and repeat steps 4 and 5.
8. To check for satisfactory operation slowly rotate the horizontal hold control in either direction while interrupting the signal by switching off channel, then back. The picture should fall into sync thru at least half the range of the horizontal hold control.
9. Adjust the width slug (B2) for a picture slightly wider than necessary to fill the picture mask horizontally.
10. Adjust the horizontal linearity slug (B3) for a picture that is symmetrical from left to right.

# TROUBLE SHOOTING AIDS

## SWEEP

### HORIZONTAL

LOSS OF SWEEP

Follow procedure outlined under "Loss of High Voltage".

INSUFFICIENT SWEEP

Check by substitution V18 and V19. Check adjustments R7, B2 and B3. Check T3, T5A, R103, R101, C4C, C80 and other associated components.

DRIVE LINES

Check by substitution V18 and V19. Check adjustments R7 and B3. Check C78, C76, R103 and other associated components.

COMPRESSED LEFT SIDE

Check by substitution V18 and V19. Check horizontal output and damper stages for component failure or change of value.

FOLDS

Follow procedure outlined under "Drive Lines".

PIE CRUST EFFECT

Check by substitution V17, V18 and V19. Check C73 for open. Check T3, T5A and other associated components.

XMAS TREE EFFECT

Check by substitution V17, V18 and V19. Check T3 and T5A for internal arcing. Check L23, C75, C76, C74, R95, R97 and other associated components.

### VERTICAL

LOSS OF SWEEP

Check by substitution V14 and V15. Check waveform W10.

| If Satisfactory | If Unsatisfactory |
|---|---|
| Check T4, T5B, R88, R84, R6, C68 C2C and other associated components. | Check T2, R81, R9, C67, C65 and other associated components. |

INSUFFICIENT SWEEP

Check by substitution V14 and V15. Check height and vertical linearity controls for proper operation. Check T3 and T5B.

COMPRESSED AT BOTTOM

Check by substitution V14 and V15. Check C67, R9, R81, T2 and other associated components.

COMPRESSED AT TOP

Check by substitution V14 and V15. Check R6, R84, C2C, C3, T4, T5B and other associated components.

FOLDS

Check by substitution V14 and V15. Check C66, R82, T4, T5A and other associated components.

## SYNC

LOSS OF VERTICAL AND HORIZONTAL SYNC

Check by substitution V13 and V14. Check C60, C63, C62, R72, R78, R77, R76 and other associated components.

LOSS OF VERTICAL SYNC-HORIZONTAL SYNC SATISFACTORY

Substitute V14. Check waveform W8.

| If Satisfactory | If Unsatisfactory |
|---|---|
| Check T2, R4, R80, C65 and other associated components. | Check vertical integrator network. Check video IF for overloading. |

LOSS OF HORIZONTAL SYNC-VERTICAL SYNC SATISFACTORY

Check by substitution V16 and V17. Check C69, C70, C71, C76 R89, R90, R96 and other associated components.

HORIZONTAL BENDING

Check by substitution V8, V9, V13, V14 and V16. Check horizontal AFC network.

## VIDEO

LOSS OF VIDEO

Substitute V7. Check R42, R43, C37, C36, C1B and other associated components.

SOUND BARS(4.5 MC BEAT)

Adjust tuner fine tuning for best sound and picture. Check adjustment A13. Check video IF alignment.

POOR CONTRAST

Substitute V7. Check L17, C37, R45, contrast control, picture tube and other associated components.

NEGATIVE PICTURE

Substitute V7. Check video detector network. Check picture tube, R43 and other associated components.

SMEAR

Substitute V7. Check L14, L15, L17, L18, C37 and other associated components.

WIDE BLACK BAR ACROSS PICTURE

Check by substitution V1, V3, V4, V5, V6 and V7 for heater to cathode leakage.

## AUDIO

WEAK OR NO SOUND

Check by substitution V6, V9, V10, V11 and V12. Check stages V11 and V12 using audio signal generator. Apply audio signal across R1B.

| If Satisfactory | If Unsatisfactory |
|---|---|
| Check ratio detector and audio IF stages for component failure or change of value. | Check C54, C57, C58, R66, R64A, R65, T9, speaker and other associated components. |

BUZZ

Adjust tuner fine tuning for best sound and picture. Check adjustment A12 for minimum buzz. If still unsatisfactory, check audio IF alignment.

DISTORTED

Follow procedure outlined under "Weak or No Sound".

## POWER

DEAD SET

If filaments fail to light, check AC interlock assembly. Check switch on volume control and T1. If filaments light, substitute V21. Check B+ filter and decoupling network.

SMALL AND/OR DIM PICTURE

Substitute V21. Check B+ filter and decoupling network.

# TROUBLE SHOOTING AIDS (cont)

## HIGH VOLTAGE

**LOSS OF HIGH VOLTAGE**

Check by substitution V17, V18, V19 and V20. Check M1 fuse. Check waveform W17.

| If Satisfactory | If Unsatisfactory |
|---|---|
| Check T3, T5A, T6, T7, C81, C82, C80, C4C, R103 and other associated components. | Check L23, C75, C76, C78, R97, R95, and other associated components. |

**INSUFFICIENT HIGH VOLTAGE**

Check by substitution V18, V19, V20 and V21. Check C78, C4C, R103 and R101. Check adjustments R7, B2 and B3. Check components associated with V18.

**BLOOMING**

Check by substitution V18, V19, V20 and V21. Check B+ filter and decoupling network.

## GENERAL

**RASTER, SOUND, NO PICTURE**

Follow procedure outlined under "Loss of Video".

**RASTER, PICTURE, NO SOUND**

Follow procedure outlined under "Weak or No Sound".

**RASTER, NO SOUND, NO PICTURE**

Check by substitution V1, V2, V3, V4, V5, V6, V7 and V8. Check video IF components for failure or change of value.

**NO RASTER, NO SOUND**

Follow procedure outlined under "Dead Set".

**KEYSTONE EFFECT**

Check T5 and its associated components.

**INTERMITTENT STREAKS**

Check high voltage section for corona dischage and arcing.

Symptoms shown are assumed and are not indicative of the quality and workmanship of this equipment.

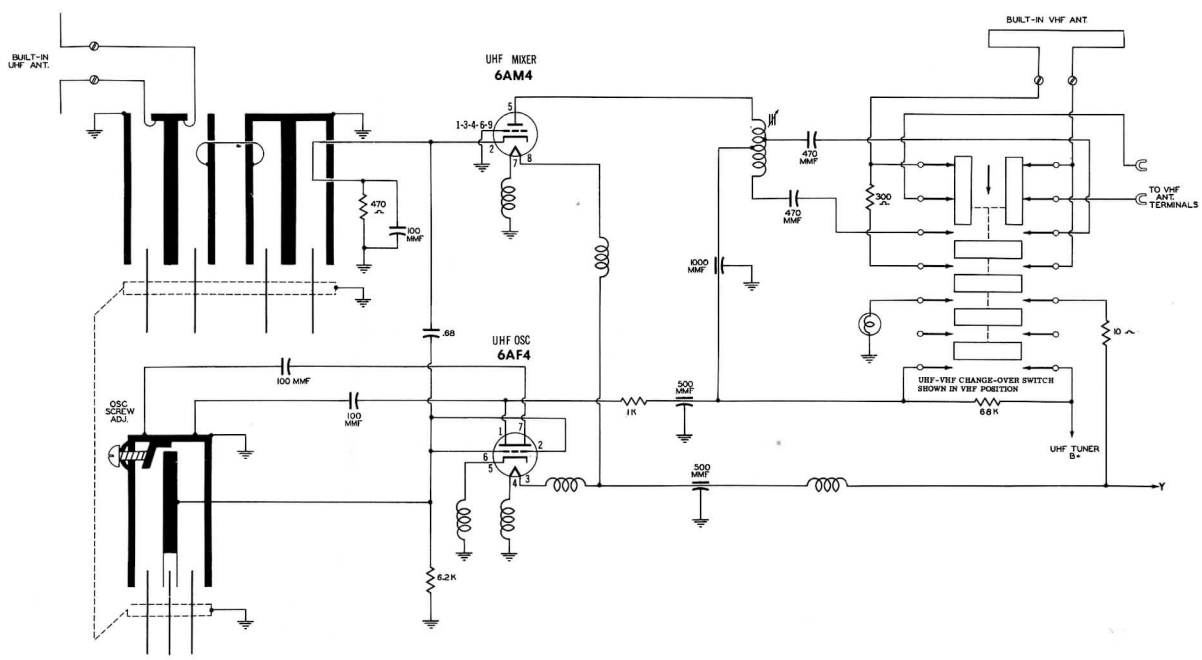


A PHOTOFACT STANDARD NOTATION SCHEMATIC
© Howard W. Sams & Co., Inc. 1954

UHF TUNER PART NO. A4000 USED WITH CHASSIS 22G2 22G2Z AND 22N2 STAMPED RUN 3 OR HIGHER

# UHF TUNER SCHEMATIC

# PARTS LIST AND DESCRIPTIONS

## TUBES (SYLVANIA, GENERAL ELECTRIC, WESTINGHOUSE)

| ITEM No. | USE | REPLACEMENT DATA: ADMIRAL PART No. | REPLACEMENT DATA: STANDARD REPLACEMENT | RETMA BASE TYPE | NOTES |
|---|---|---|---|---|---|
| V1 | RF Amplifier | 6BZ7 | 6BZ7 | 9AJ | |
| V2 | Mixer - Osc. | 6J6 | 6J6 | 7BF | |
| V3 | 1st. Video IF Amp. | 6CB6 | 6CB6 | 7CM | |
| V4 | 2nd. Video IF Amp. | 6CB6 | 6CB6 | 7CM | |
| V5 | 3rd. Video IF Amp. | 6AU6 | 6AU6 | 7BK | |
| V6 | Video Detector-1st. Sound IF Amp. | 12AT7 | 12AT7 | 9A | |
| V7 | Video Output | 12BY7 | 12BY7 | 9BF | |
| V8 | AGC Keying | 6AU6 | 6AU6 | 7BK | |
| V9 | 2nd. Sound IF Amp. | 6AU6 | 6AU6 | 7BK | |
| V10 | Ratio Detector | 6AL5 | 6AL5 | 6BT | |
| V11 | AF Amplifier | 6AV6 | 6AV6 | 7BT | |
| V12 | Audio Output | 6V6GT | 6V6GT | 7S | |
| V13 | Sync Separator | 6CS6 | 6CS6 | 7CH | In Ch. 22A3, 22A3Z, 22G2, 22G2Z, & 22N2 uses a 12AU7. |
| V14 | Sync Phase Inv-Vert. Oscillator | 6SN7GT | 6SN7GT | 8BD | |
| V15 | Vert. Output | 6S4 | 6S4 | 9AC | |
| V16 | Horiz. AFC | 6AL5 | 6AL5 | 6BT | |
| V17 | Horiz. Mult. | 6SN7GT | 6SN7GT | 8BD | |
| V18 | Horiz. Output | 6BQ6GT | 6BQ6GT | 6AM | |
| V19 | Damper | 6AX4GT | 6AX4GT | 4CG | |
| V20 | HV Rectifier | 1B3GT | 1B3GT | 3C | |
| V21 | LV Rectifier | 5U4G | 5U4G | 5T | |

## CATHODE-RAY TUBE

| ITEM No. | REPLACEMENT DATA: ADMIRAL PART No. | CBS-HYTRON PART No. | GENERAL ELECTRIC PART No. | SYLVANIA PART No. | WESTINGHOUSE PART No. | RETMA BASE TYPE | NOTES |
|---|---|---|---|---|---|---|---|
| V22 | 21ZP4B | 21ZP4B | 21ZP4B | 21ZP4B | 21ZP4B | 12N | ① Circuit changes necessary |
| | 21ZP4A | 21ZP4A | 21ZP4A | 21ZP4A | 21ZP4A | 12N | |
| | | | | 21ZP4 ① | | 12D | |
| | 21EP4A | 21EP4A | 21EP4A | 21EP4A | 21EP4A | 12N | |
| | | 21EP4B | | | 21EP4B | 12N | |
| | | | | 21EP4 ① | | 12D | |

## CAPACITORS

**Capacity values given in the rating column are in mfd. for Electrolytic and Paper Capacitors, and in mmfd. for Mica and Ceramic Capacitors.**

| ITEM No. | RATING: CAP. | RATING: VOLT | REPLACEMENT DATA: ADMIRAL PART No. | AEROVOX PART No. | CENTRALAB PART No. | CORNELL-DUBILIER PART No. | ERIE PART No. | MALLORY PART No. | SPRAGUE PART No. | NOTES |
|---|---|---|---|---|---|---|---|---|---|---|
| C1A | ▰60 | 450 | 67C15-27 | AFH4-93 | | C168 | | FP375.6 | TVL-2770 | |
| B | ▲20 | 350 | | | | | | | TVA-1608 | |
| C | ■40 | 350 | | | | | | | | |
| C2A | ▰80 | 400 | 67C15-28 | AFH4-87 | | C164 | | FP368.3 | TVL-3757 | |
| B | ■20 | 350 | | | | | | | | |
| C | ▲100 | 50 | | | | | | | | |
| C3 | 20 | 475 | 67A25-1 | PRS500/8 | | BR2050 | | TC83 | TVA-1804 | |
| C4A | ■10 | 450 | 67C15-19 | AFH3-125 | | C166 | | FP345.2 | TVL-3719 | |
| B | ▲20 | 25 | | | | | | | | |
| C | 10 | 25 | | | | | | | | |
| C5 | 20 | 475 | 67A25-1 | PRS500/20 | | BR2050 | | TC83 | TVA-1804 | Note 1 |
| C6 | 4 | 50 | 67A4-9 | PRS150/4 | | BR550 | | TC30 | TVA-1303 | |
| C7 | 20 | 475 | 67A25-1 | PRS500/20 | | BR2050 | | TC83 | TVA-1804 | Note 2 |
| C8 | 3-9 | | 98A45-96 | | 829-10 | | | | | |
| C9 | 800 | | 94C37-90 | EF-001 | MFT-1000 | | | | 503C-D1 | |
| C10 | 3 | | 94D47-54 | SI3NP0 | TCZ-3 | Z007 | NP0K-030 | ZT-5533 | 5TCCB-V33 | |
| C11 | 800 | | 94C37-90 | EF-001 | MFT-1000 | | | | 503C-D1 | |
| C12 | .5-3 | | 98A45-23 | | 829-3 | | 3115-01-0R5 | CT565A | | |
| C13 | 1.5 | | | SI1.5NP0 | TCZ-1.5 | Z004 | NP0K-1R5 | ZT-5515 | 5TCCB-V15 | |
| C14 | 47 | | 94D47-50 | BPD-000047 | D6-470 | G033 | 801-470 | UC-5447 | 5GA-Q47 | |
| C15 | 1000 | | 98A45-24 | BPD-001 | DD-102 | K069 | 801-001 | DC-521 | 5HK-D1 | |
| C16 | 800 | | 94C37-90 | EF-001 | MFT-1000 | | | | 503C-D1 | |
| C17 | 47 | | 94D47-50 | BPD-000047 | D6-470 | G033 | 801-470 | UC-5447 | 5GA-Q47 | |
| C18 | .5-3 | | 98A45-23 | | 829-3 | | 3115-01-0R5 | CT565A | | |
| C19 | 10 | | 94D47-51 | SI10NP0 | TCZ-10 | Z018 | NP0K-100 | ZT-541 | 5TCC-Q1 | |
| C20 | 5 | | 94D47-52 | | | | | | | |
| C21 | 1000 | | | BPD-001 | DD-102 | K069 | 801-001 | DC-521 | 5HK-D1 | |
| C22 | 6.8 | | 94D47-53 | SI6.8NP0 | TCZ-6.8 | Z013 | NP0K-6R8 | ZT-5568 | 5TCCB-V68 | |
| C23 | 800 | | 94C37-90 | EF-001 | MFT-1000 | | | | 503C-D1 | |
| C24 | 800 | | 94C37-90 | EF-001 | MFT-1000 | | | | 503C-D1 | |
| C25 | 120 | | 65B1-10 | SI120 | D6-121 | TP35 | GP2K-121 | UC-5312 | 5GA-T12 | |
| C26 | 1000 | | | SI1000 | D6-102 | TP52 | GP2L-102 | UC-521 | 5HK-D1 | |
| C27 | 5000 | | | BPD-005 | DD-502 | K080 | 811-005 | DC-525 | 5HK-D5 | |
| C28 | 3.3 | | | SI3.3NP0 | TCZ-3.3 | Z008 | NP0K-3R3 | ZT-5533 | 5TCCB-V33 | |
| C29 | 22 | | | SI22NP0 | TCZ-22 | TZ14 | NP0K-220 | ZT-5422 | 5TCC-Q22 | |
| C30A | 1500 | | | BPD-2X0015 | DD2-152 | DK071 | 812-0015 | DCD-5215 | 5HK-D15 | |
| B | 1500 | | | | | | | | | |
| C31 | 5000 | | | BPD-005 | DD-502 | K080 | 811-005 | DC-525 | 5HK-D5 | |
| C32 | 5000 | | | BPD-005 | DD-502 | K080 | 811-005 | DC-525 | 5HK-D5 | |
| C33A | 4000 | | | BPD-2X004 | D6-402 | DK078 | 822-004 | DCD-524 | 5HK-2D4 | |
| B | 4000 | | | | D6-402 | | | | | |
| C34 | 6.8 | | | SI6.8NP0 | TCZ-6.8 | TZ08 | NP0K-6R8 | ZT-5568 | 5TCCB-V68 | |
| C35 | 6.8 | | 65C6-71 | SI6.8NP0 | TCZ-6.8 | Z013 | NP0K-6R8 | ZT-5568 | 5TCCB-V68 | |
| C36 | 5000 | | | BPD-005 | DD-502 | K080 | 811-005 | DC-525 | 5HK-D5 | |
| C37 | .1 | 400 | | P488-1 | DF-104 | CUB4P1 | | PT401 | 4TM-P1 | |
| C38 | .1 | 400 | | P488-1 | DF-104 | CUB4P1 | | PT401 | 4TM-P1 | |
| C39 | .1 | 400 | | P488-1 | DF-104 | CUB4P1 | | PT401 | 4TM-P1 | |
| C40 | .001 | 600 | | P688-001 | D6-102 | CUB6D1 | GP2L-102 | PT621 | 6TM-D1 | |
| C41 | .47 | 100 | | P288-47 | | CUB2P47 | | PT4047 | 2TM-P47 | |
| C42 | .47 | 100 | | P288-47 | | CUB2P47 | | PT4047 | 2TM-P47 | |
| C43 | 6.8 | | 65C6-71 | SI6.8NP0 | TCZ-6.8 | Z013 | NP0K-6R8 | ZT-5568 | 5TCCB-V68 | |
| C44 | 39 | | | SI39NP0 | TCZ-39 | TZ20 | NP0K-390 | ZT-5439 | 5TCC-Q39 | |
| C45 | 1000 | | | BPD-001 | DD-102 | K069 | 801-001 | DC-521 | 5HK-D1 | |
| C46 | 39 | | | SI39NP0 | TCZ-39 | TZ20 | NP0K-390 | ZT-5439 | 5TCC-Q39 | |
| C47 | 5000 | | | BPD-005 | DD-502 | K080 | 811-005 | DC-525 | 5HK-D5 | |
| C48 | 180 | | 65C6-59 | | | | | | | |
| C49 | 470 | 500 | | 1469-0005 | | 5R5T47 | | MCB245 | MS-35 | |
| C50 | .0022 | 600 | | P688-0022 | D6-222 | CUB6D22 | GP2-333-222 | PT622 | 6TM-D22 | |
| C51 | .047 | 200 | | P288-047 | DF-503 | CUB2S47 | | PT4147 | 4TM-S47 | |
| C52 | 100 | | | SI100 | D6-101 | TP34 | GP1K-101 | UC-531 | 5GA-T1 | |

## CAPACITORS (cont)

| ITEM No. | RATING CAP. | RATING VOLT | REPLACEMENT DATA ADMIRAL PART No. | AEROVOX PART No. | CENTRALAB PART No. | CORNELL-DUBILIER PART No. | ERIE PART No. | MALLORY PART No. | SPRAGUE PART No. | NOTES |
|---|---|---|---|---|---|---|---|---|---|---|
| C53 | .0022 | 600 | | P688-0022 | D6-222 | CUB6D22 | GP2-333-222 | PT6222 | 6TM-D22 | |
| C54 | 10000 | | | BPD-01 | DD-103 | K082 | 811-01 | DC-511 | 5HK-S1 | |
| C55 | 50 | | | SI50 | D6-500 | TP30 | GP1K-500 | UC-545 | 5GA-Q5 | |
| C56 | 5000 | | | BPD-005 | DD-502 | K080 | 811-005 | DC-525 | 5HK-D5 | |
| C57 | .01 | | †63B6-5 | †PA-139 | DD-103 | K082 | 811-01 | DC-521 | 5HK-S1 | |
| C58 | 5000 | 1000 | | HVD15-00047 | DD16-502 | | 1R5KV-472 | | 10HK-D47 | |
| C59 | 150 | | ‡63B6-4 | ‡PA-172 | ‡PC-178 | TP36 | GP2K-151 | UC-5315 | 5GA-T15 | |
| C60 | .047 | 600 | | P688-047 | DF-503 | CUB6S47 | | PT6147 | 6TM-S47 | |
| C61 | 30 | | | | | | | | | Note 3 |
| C62 | .22 | 400 | | P488-22 | | CUB4P22 | | PT4022 | 4TM-P22 | Note 3 |
| C63 | 10000 | | | BPD-01 | DD-103 | K082 | 811-01 | DC-511 | 5HK-S1 | |
| C64A | .002 | | | | | | | PT622 | | |
| B | .005 | | ♦63B6-2 | ♦PA-110 | ♦PC-100 | ♦115TM1 | ♦1405-01 | PT625 | ♦V-1 | |
| C | .005 | | | | | | | PT625 | | |
| C65 | 4700 | 500 | | 1464-005 | | 1R5D47 | | MCB465 | MS-25 | |
| C66 | .047 | 600 | 64A2-14 | | | | | | | |
| C67 | .1 | 600 | | P688-1 | DF-104 | CUB6P1 | | PT601 | 6TM-P1 | |
| C68 | .047 | 600 | | P688-047 | DF-503 | CUB6S47 | | PT6147 | 6TM-S47 | |
| C69 | 1000 | 500 | | 1468-001 | D6-102 | 1W5D1 | GP2L-102 | MC255 | 1FM-21 | |
| C70 | 1000 | 500 | | 1468-001 | D6-102 | 1W5D1 | GP2L-102 | MC255 | 1FM-21 | |
| C71 | .002 | 600 | | P688-002 | D6-202 | CUB6D2 | GP2-333-202 | PT622 | 6TM-D2 | |
| C72 | .0047 | 600 | | P688-0047 | D6-472 | CUB6D47 | GP2-333-472 | PT6247 | 6TM-D47 | |
| C73 | .047 | 400 | | P488-047 | DF-503 | CUB4S47 | | PT4147 | 4TM-S47 | |
| C74 | 47 | 500 | | 1469-00005 | | 22R5Q47 | | MCB225 | MS-45 | |
| C75 | 3900 | 500 | 65B1-63 | 1464-004 | | 1R5D39 | | MCB463 | MS-24 | |
| C76 | 330 | 500 | | 1469-00035 | | 5R5T33 | | | | |
| C77 | 270 | 500 | | 1469-0003 | | 22R5T27 | | MCB241 | MS-33 | |
| C78 | .01 | 600 | | P688-01 | D6-103 | CUB6S1 | GP2-333-103 | PT611 | 6TM-S1 | |
| C79 | .1 | 600 | | P688-1 | DF-104 | CUB6P1 | | PT601 | 6TM-P1 | |
| C80 | .047 | 600 | | P688-047 | DF-503 | CUB6S47 | | PT6147 | 6TM-S47 | |
| C81 | .047 | 600 | | P688-047 | DF-503 | CUB6S47 | | PT6147 | 6TM-S47 | |
| C82 | .047 | 600 | | P688-047 | DF-503 | CUB6S47 | | PT6147 | 6TM-S47 | |
| C83 | .1 | 400 | | P488-1 | DF-104 | CUB4P1 | | PT401 | 4TM-P1 | |
| C84 | 63 | 2000 | | | | | | | | Note 4 |

Note 1. Not used in all versions
Note 2. Used only in versions with UHF tuner.
Note 3. Not used when V13 is a 12AU7.
Note 4. Some versions may use 47MMF in this application (part #65B1-64).
Note 5. Not used when V13 is a 6CS6.
♦ Items C64A, C64B, C64C, R79A, R79B, R79C are combined in one unit.
† Items C57, R64A, R64B are combined in one unit.
‡ Items C59, R44A, R44B are combined in one unit.

## CONTROLS

| ITEM No. | RATING RESISTANCE | RATING WATTS | REPLACEMENT DATA ADMIRAL PART No. | IRC PART No. | CLAROSTAT PART No. | CENTRALAB PART No. | MALLORY PART No. | INSTALLATION NOTES |
|---|---|---|---|---|---|---|---|---|
| R1A | 1000Ω | ½ | 75B11-22 | *QJ-442 | RTV-404 | SBBT-732-S | | Contrast - Panel |
| B | 1Meg | ½ | | | | | | Volume and switch tapped at 650KΩ-rear |
| R2A | 2Meg | ½ | 75B13-22 | Q11-139 | A47-2Meg-S | AB-75 | U-56 | Tone |
| B | Shaft | | Not Req. | Not Req. | KSS-3 | AK-4 | Not Req. | Attach to R2A |
| R3A | 750Ω | 2 | 75B17-1 | ♦QJ-425 | | | WK751 | Focus - Panel wire wound |
| B | 100KΩ | ½ | | | | | UR15L | Brightness - Rear |
| R4A | 1.5Meg | ½ | 75B13-26 | Q11-138 | A47-1.5Meg-S | AB-75 | U-155 | Vert. Hold |
| B | Shaft | | Not Req. | Not Req. | KSS-3 | AK-4 | Not Req. | Attach to R4A |
| R5A | 25KΩ | ½ | 75B13-28 | Q11-120 | A47-25K-S | AB-26 | U-29 | Horiz. Hold |
| B | Shaft | | Not Req. | Not Req. | KSS-3 | AK-4 | Not Req. | Attach to R5A |
| R6A | 3000Ω | ½ | 75C13-7 | Q11-112 | A47-3000-S | AB-8 | U-8 | Vert. Linearity |
| B | Shaft | | Not Req. | Not Req. | FKS-1/4 | AK-1 | Not Req. | Attach to R6A |
| R7A | 150KΩ | ½ | 75B13-29 | Q11-129 | A47-150K-S | AB-46 | U-43 | Horiz. Drive |
| B | Shaft | | Not Req. | Not Req. | FKS-1/4 | AK-1 | Not Req. | Attach to R7A |
| R8A | 5Meg | ½ | 75C1-54 | Q11-141 | A47-5Meg-S | AB-87 | U-67 | Noise Gate |
| B | Shaft | | Not Req. | Not Req. | FKS-1/4 | AK-3 | Not Req. | Attach to R8A |
| R9A | 2.5Meg | ½ | 75B13-3 | Q11-239 | A47-2.5Meg-S | AB-83 | SU-565 | Height |
| B | Shaft | | Not Req. | Not Req. | FKS-1/4 | AK-1 | Not Req. | Attach to R9A |
| R10A | 5Meg | ½ | 75C1-54 | Q11-141 | A47-5Meg-S | AB-87 | U-67 | DX Range finder |
| B | Shaft | | Not Req. | Not Req. | FKS-1/4 | AK-3 | Not Req. | Attach to R10A |

* CONCENTRIKIT EQUIVALENT KIT-K-2 BASE ELEMENTS AND SHAFTS B17-108 and P1-126 (Panel)
B19-137X and R2-212 (rear)
and SWITCH 76-1

♦ CONCENTRIKIT EQUIVALENT KIT-K-3 BASE ELEMENTS AND SHAFTS W13-105 AND P3-121 (panel)
B11-128 AND R12-131 (rear)

## RESISTORS

| ITEM No. | RATING OHMS | RATING WATT | REPLACEMENT DATA ADMIRAL PART No. | IRC PART No. | NOTES |
|---|---|---|---|---|---|
| R11 | 15KΩ | ½ | | BTS-15K | |
| R12 | 47KΩ | ½ | | BTS-47K | |
| R13 | 330KΩ | ½ | | BTS-330K | |
| R14 | 220KΩ | ½ | | BTS-220K | |
| R15 | 1500Ω | 1 | | BTA-1500 | |
| R16 | 10KΩ | ½ | | BTS-10K | |
| R17 | 220KΩ | ½ | | BTS-220K | |
| R18 | 8200Ω | ½ | | BTS-8200 | |
| R19 | 15KΩ | ½ | | BTS-15K | |
| R20 | 10KΩ | ½ | | BTS-10K | |
| R21 | 15KΩ | ½ | | BTS-15K | |
| R22 | 100KΩ | ½ | | BTS-100K | |
| R23 | 15Meg | ½ | | BTS-15Meg | |
| R24 | 2.7Meg | ½ | | BTS-2.7Meg | |
| R25 | 1.5Meg | ½ | | BTS-1.5Meg | |
| R26 | 8200Ω 5% | ½ | | BTS-8200 5% | |
| R27 | 1000Ω | ½ | | BTS-1000 | |
| R28 | 150KΩ | ½ | | BTS-150K | |
| R29 | 47Ω | ½ | | BTS-47 | |
| R30 | 470Ω | ½ | | BTS-470 | |
| R31 | 15KΩ 5% | ½ | | BTS-15K 5% | |
| R32 | 330Ω | ½ | | BTS-330 | |
| R33 | 1000Ω | ½ | | BTS-1000 | |
| R34 | 27KΩ | ½ | | BTS-27K | |
| R35 | 68Ω | ½ | | BTS-68 | |
| R36 | 10KΩ 5% | ½ | | BTS-10K 5% | |
| R37 | 330Ω | ½ | | BTS-330 | |
| R38 | 150Ω | ½ | | BTS-150 | |
| R39 | 1000Ω | ½ | | BTS-1000 | |
| R40 | 4700Ω 5% | ½ | | BTS-4700 5% | |
| R41 | 330Ω | ½ | | BTS-330 | Note 1 |
| R42 | 18KΩ | 1 | | BTA-18K | |
| R43 | 4700Ω | 2 | | | |
| R44A | 15KΩ | ½ | ‡63B6-4 | BTS-15K | |
| B | 270KΩ | ½ | | BTS-270K | |
| R45 | 270KΩ | ½ | | BTS-270K | |
| R46 | 1Meg | ½ | | BTS-1Meg | |
| R47 | 6200Ω 5% | ½ | | BTS-6200 5% | |
| R48 | 100KΩ | ½ | | BTS-100K | |
| R49 | 6800Ω | ½ | | BTS-6800 | |
| R50 | 180KΩ | ½ | | BTS-180K | |
| R51 | 270KΩ | ½ | | BTS-270K | |
| R52 | 150KΩ | ½ | | BTS-150K | |
| R53 | 33KΩ | ½ | | BTS-33K | |
| R54 | 470KΩ | ½ | | BTS-470K | |
| R55 | 120Ω | ½ | | BTS-120 | |
| R56 | 100KΩ | ½ | | BTS-100K | |
| R57 | 1000Ω | ½ | | BTS-1000 | |

# PARTS LIST AND DI

## RESI

| ITEM No. | RATING OHMS | RATING WATT | REPLACEMENT DATA ADMIRAL PART No. | IRC PART No. | NOT |
|---|---|---|---|---|---|
| R58 | 390Ω | ½ | | BTS-390 | |
| R59 | 47KΩ | ½ | | BTS-47K | |
| R60 | 10KΩ | ½ | | BTS-10K | |
| R61 | 10KΩ | ½ | | BTS-10K | |
| R62 | 82KΩ | ½ | | BTS-82K | |
| R63 | 4.7Meg | ½ | | BTS-4.7Meg | |
| R64A | 470KΩ | ½ | †63B6-5 | BTS-470K | |
| B | 1Meg | ½ | | BTS-1Meg | |
| R65 | 330Ω | 1 | | BTA-330 | |
| R66 | 470Ω | 2 | | BTB-470 | |
| R67 | 47KΩ | ½ | | BTS-47K | |
| R68 | 470KΩ | ½ | | BTS-470K | |
| R69 | 3.3Meg | ½ | | BTS-3.3Meg | |
| R70 | 33KΩ | 2 | | BTB-33K | |
| R71 | 56KΩ | ½ | | BTS-56K | |
| R72 | 220KΩ | ½ | | BTS-220K | |
| R73 | 4.7Meg | ½ | | BTS-4.7Meg | |
| R74 | 2.2Meg | ½ | | BTS-2.2Meg | |
| R75 | 2200Ω | ½ | | BTS-2200 | |
| R76 | 4700Ω | ½ | | BTS-4700 | |
| R77 | 2700Ω | ½ | | BTS-2700 | |
| R78 | 22KΩ | 2 | | BTB-22K | Note |
| R79A | 22KΩ | ½ | ♦63B6-2 | BTS-22K | |
| B | 8200Ω | ½ | | BTS-8200 | |
| C | 8200Ω | ½ | | BTS-8200 | |
| R80 | 1.2Meg | ½ | | BTS-1.2Meg | |
| R81 | 1Meg | ½ | | BTS-1Meg | |
| R82 | 10KΩ 5% | ½ | 60B7-103 | BTS-10K 5% | |

Note 1. Some versions may us
Note 2. Not used in all versi
♦ Items R79A, R79B, R79C,
† Items R64A, R64B, C57 ar
‡ Items R44A, R44B, C59 ar

## TRANSFO

| ITEM No. | RATING PRI. | RATING SEC. 1 | RATING SEC. 2 | ADMIRAL PART No. | |
|---|---|---|---|---|---|
| T1 | 117VAC @1.72A | 604VCT .240ADC | 5VAC @3A | 80C35-3 | P- |
| | SEC. 3 | SEC. 4 | SEC. 5 | | |
| | 6.3VAC @9.4A | | | | |

① Drill new mounting holes.
② Parallel and phase 6.3V windings for Sec. #3.

## TRANSFORMER

| ITEM No. | USE | ADMIRAL PART No. | |
|---|---|---|---|
| T2 | Vert.Osc. Trans. | 79A18-4 | A |
| T3 | Horiz.Output Trans. | 79D41-2 | A |
| T4 | Vert.Output Trans. | 79B40-3<br>79B40-2 ③ | A |
| T5A | Yoke-Horiz.(20MH) | 94C51-1 | D |
| B | Vert.(40MH) | | |
| T6 | Focus Coil | 69D117-12<br>69D117-11④ | |
| T7 | Horiz.Linearity(1.5-10MH) | 94A50-1 | W |
| T8 | Width-(1.2-2.1MH)<br>(4-28MH) | 94A50-2 | |

① Drill one new mounting hole.
② Drill new mounting holes.
③ Alternate vertical output transformer
④ Alternate focus coil.
⑤ Drill new mounting hole or use original slider and core
⑥ Connect to coded black and orange terminals.
⑦ Connect to coded blue and red terminals.
⑧ Connect to coded #3 and #4 terminals.

## *HORIZONTAL OUTPUT

Use Original Width

| | ORIGINAL TERMINAL CONNECTIONS | Stancor Replacement Connections | Repl Con |
|---|---|---|---|
| | 4 | 4 | |
| | 3 | 3 | |
| | 2 | 2 | |
| | 8 | 6 | |
| | 1 | 7 | |
| Connect Width Coil Across → | 8 & 1 | 6 & 7 | |
| Special Notes → | | ⑨ | |

⑨ If picture is out of phase, reverse AFC
⑩ If picture is out of phase, reverse pri
⑪ Remove original width coil and R104 fr

# PARTS LIST AND DESCRIPTIONS (Continued)

| ALLORY ART No. | SPRAGUE PART No. | NOTES |
|---|---|---|
| 6222 | 6TM-D22 | |
| -511 | 5HK-S1 | |
| -545 | 5GA-Q5 | |
| -525 | 5HK-D5 | |
| -521 | 5HK-S1 | |
| | 10HK-D47 | |
| -5315 | 5GA-T15 | |
| 6147 | 6TM-S47 | |
| | | Note 3 |
| 4022 | 4TM-P22 | Note 3 |
| -511 | 5HK-S1 | |
| 622 } | ♦V-1 | |
| 625 } | | |
| 625 } | | |
| B465 | MS-25 | |
| 601 | 6TM-P1 | |
| 6147 | 6TM-S47 | |
| 255 | 1FM-21 | |
| 255 | 1FM-21 | |
| 622 | 6TM-D2 | |
| 6247 | 6TM-D47 | |
| 4147 | 4TM-S47 | |
| B225 | MS-45 | |
| B463 | MS-24 | |
| B241 | MS-33 | |
| 611 | 6TM-S1 | |
| 601 | 6TM-P1 | |
| 6147 | 6TM-S47 | |
| 6147 | 6TM-S47 | |
| 6147 | 6TM-S47 | |
| 401 | 4TM-P1 | |
| | | Note 4 |

| INSTALLATION NOTES |
|---|
| Contrast - Panel |
| Volume and switch tapped at 650KΩ-rear |
| Tone |
| Attach to R2A |
| Focus - Panel wire wound |
| Brightness - Rear |
| Vert. Hold |
| Attach to R4A |
| Horiz. Hold |
| Attach to R5A |
| Vert. Linearity |
| Attach to R6A |
| Horiz. Drive |
| Attach to R7A |
| Noise Gate |
| Attach to R8A |
| Height |
| Attach to R9A |
| DX Range finder |
| Attach to R10A |

5 (Panel)
212 (rear)

21 (panel)
31 (rear)

| PLACEMENT DATA IRAL T No. | IRC PART No. | NOTES |
|---|---|---|
| | BTS-68 | |
| | BTS-10K 5% | |
| | BTS-330 | |
| | BTS-150 | |
| | BTS-1000 | |
| | BTS-4700 5% | |
| | BTS-330 | Note 1 |
| | BTA-18K | |
| -4 | BTS-15K | |
| | BTS-270K | |
| | BTS-270K | |
| | BTS-1Meg | |
| | BTS-6200 5% | |
| | BTS-100K | |
| | BTS-6800 | |
| | BTS-180K | |
| | BTS-270K | |
| | BTS-150K | |
| | BTS-33K | |
| | BTS-470K | |
| | BTS-120 | |
| | BTS-100K | |
| | BTS-1000 | |

## RESISTORS (cont)

| ITEM No. | RATING OHMS | RATING WATT | REPLACEMENT DATA ADMIRAL PART No. | REPLACEMENT DATA IRC PART No. | NOTES |
|---|---|---|---|---|---|
| R58 | 390Ω | ½ | | BTS-390 | |
| R59 | 47KΩ | ½ | | BTS-47K | |
| R60 | 10KΩ | ½ | | BTS-10K | |
| R61 | 10KΩ | ½ | | BTS-10K | |
| R62 | 82KΩ | ½ | | BTS-82K | |
| R63 | 4. 7Meg | ½ | | BTS-4. 7Meg | |
| R64A | 470KΩ | ½ | †63B6-5 | BTS-470K | |
| B | 1Meg | ½ | | BTS-1Meg | |
| R65 | 330Ω | 1 | | BTA-330 | |
| R66 | 470Ω | 2 | | BTB-470 | |
| R67 | 47KΩ | ½ | | BTS-47K | |
| R68 | 470KΩ | ½ | | BTS-470K | |
| R69 | 3. 3Meg | ½ | | BTS-3. 3Meg | |
| R70 | 33KΩ | 2 | | BTB-33K | |
| R71 | 56KΩ | ½ | | BTS-56K | |
| R72 | 220KΩ | ½ | | BTS-220K | |
| R73 | 4. 7Meg | ½ | | BTS-4. 7Meg | |
| R74 | 2. 2Meg | ½ | | BTS-2. 2Meg | |
| R75 | 2200Ω | ½ | | BTS-2200 | |
| R76 | 4700Ω | ½ | | BTS-4700 | |
| R77 | 2700Ω | ½ | | BTS-2700 | |
| R78 | 22KΩ | 2 | | BTB-22K | Note 2 |
| R79A | 22KΩ | ½ | ♦63B6-2 | BTS-22K | |
| B | 8200Ω | ½ | | BTS-8200 | |
| C | 8200Ω | ½ | | BTS-8200 | |
| R80 | 1. 2Meg | ½ | | BTS-1. 2Meg | |
| R81 | 1Meg | ½ | | BTS-1Meg | |
| R82 | 10KΩ 5% | ½ | 60B7-103 | BTS-10K 5% | |

| ITEM No. | RATING OHMS | RATING WATT | REPLACEMENT DATA ADMIRAL PART No. | REPLACEMENT DATA IRC PART No. | NOTES |
|---|---|---|---|---|---|
| R83 | 1Meg | ½ | | BTS-1Meg | |
| R84 | 820Ω | ½ | | BTS-820 | |
| R85 | 2700Ω | ½ | | BTS-2700 | |
| R86 | 560Ω | ½ | | BTS-560 | |
| R87 | 560Ω | ½ | | BTS-560 | |
| R88 | 1200Ω | 2 | | BTB-1200 | |
| R89 | 100KΩ 5% | ½ | | BTS-100K 5% | |
| R90 | 100KΩ 5% | ½ | | BTS-100K 5% | |
| R91 | 4. 7Meg | ½ | | BTS-4. 7Meg | |
| R92 | 470KΩ | ½ | | BTS-470K | |
| R93 | 47KΩ | 2 | | BTB-47K | |
| R94 | 1500Ω | ½ | | BTS-1500 | |
| R95 | 5600Ω | ½ | | BTS-5600 | |
| R96 | 120KΩ | ½ | | BTS-120K | |
| R97 | 100KΩ | ½ | | BTS-100K | |
| R98 | 5600Ω | ½ | | BTS-5600 | |
| R99 | 1Meg | ½ | | BTS-1Meg | |
| R100 | 68Ω | ½ | | BTS-68 | |
| R101 | 47Ω | 1 | | | |
| R102 | 82Ω | ½ | | BTS-82 | |
| R103 | 8200Ω | 2 | | BTB-8200 | |
| R104 | 1000Ω | 2 | | BTB-1000 | |
| R105 | 1000Ω | ½ | | BTS-1000 | |
| R106 | 4. 7Ω | ½ | | | |
| R107 | 4250Ω | 10 | | | |
| R108 | 3000Ω | 15 | | | |
| R109 | 270KΩ 5% | 1 | | | |
| R110 | 12KΩ | 5 | | | Note 2 |

Note 1. Some versions may use a 100Ω resistor in this application.
Note 2. Not used in all versions
♦ Items R79A, R79B, R79C, C64A, C64B, C64C are combined in one unit.
† Items R64A, R64B, C57 are combined in one unit.
‡ Items R44A, R44B, C59 are combined in one unit.

## TRANSFORMER (POWER)

| ITEM No. | RATING PRI. | RATING SEC. 1 | RATING SEC. 2 | ADMIRAL PART No. | Stancor PART No. | Merit PART No. | Triad PART No. | RCA TYPE No. | Halldorson PART No. | Thordarson PART No. |
|---|---|---|---|---|---|---|---|---|---|---|
| T1 | 117VAC @1.72A | 604VCT .240ADC | 5VAC @3A | 80C35-3 | P-8331①② | P-3077 | | | P9733 | |
| | SEC. 3 | SEC. 4 | SEC. 5 | | | | | | | |
| | 6.3VAC @9.4A | | | | | | | | | |

① Drill new mounting holes.
② Parallel and phase 6.3V windings for Sec. #3.

## TRANSFORMERS (SWEEP CIRCUITS)

| ITEM No. | USE | ADMIRAL PART No. | Stancor PART No. | Merit PART No. | Triad PART No. | RCA TYPE No. | Halldorson PART No. | Thordarson PART No. |
|---|---|---|---|---|---|---|---|---|
| T2 | Vert.Osc. Trans. | 79A18-4 | A-8125 | A-3003 | A-97X | 209T1 ① | B6702 | 24A87 ① |
| T3 | Horiz.Output Trans. | 79D41-2 | A-8135 * | HV0-22* | D-22 * & WC-11② | 232T1 * & 214R1 ② | FB411 * & RF800② | FLY-14* & WC-20 ② |
| T4 | Vert.Output Trans. | 79B40-3 79B40-2 ③ | A-8123 ① | A-3037① | A-102X ① | 222T1 ① | Z1804 ① | 26S52 ① |
| T5A | Yoke-Horiz. (20MH) | 94C51-1 | DY-11A | MDF-73 | Y-22-1 | 222D1 | DF605 | Y-9 |
| B | Vert. (40MH) | | | | | | | |
| T6 | Focus Coil | 69D117-12 69D117-11④ | | | | | | |
| T7 | Horiz. Linearity (1.5-10MH) | 94A50-1 | WC-5⑤⑥ | MWC-6⑤ | WC-12⑤⑦ | 213R1 ⑤ | RF800⑤⑧ | WC-18 ⑤ |
| T8 | Width-(1.2-2.1MH) (4-28MH) | 94A50-2 | | | | | | |

① Drill one new mounting hole.
② Drill new mounting holes.
③ Alternate vertical output transformer
④ Alternate focus coil.
⑤ Drill new mounting hole or use original slider and core.
⑥ Connect to coded black and orange terminals.
⑦ Connect to coded blue and red terminals.
⑧ Connect to coded #3 and #4 terminals.

## *HORIZONTAL OUTPUT TRANSFORMER CONNECTION DATA

Use Original Width Coil Unless Replacement Type Is Listed

| | ORIGINAL TERMINAL CONNECTIONS | Stancor Replacement Connections | Merit Replacement Connections | Triad Replacement Connections | RCA Replacement Connections | Halldorson Replacement Connections | Thordarson Replacement Connections |
|---|---|---|---|---|---|---|---|
| | 4 | 4 | 4 | 9 | 10 | 9 | 9 |
| | 3 | 3 | 3 | 8 & 1 | 8 | 8 | 8 & 7 |
| | 2 | 2 | 1 | 1 | 3 | 1 | 1 |
| | 8 | 6 | 6 | WC-11 (orange term) | 1 | RF800 (#4 Term) | WC-20 (#1 Term) |
| | 1 | 7 | 7 | WC-11 (black term) | 2 | RF800 (#3 Term) | WC-20 (#2 Term) |
| Connect Width Coil Across → | 8 & 1 | 6 & 7 | 6 & 7 | WC-11 Red & Blue Terms T & 1 | 212R1 1 & 2 | RF800 #1 & #2 terms T & 1 | WC-20 #3 & #4 terms T & 1 |
| Special Notes → | | ⑨ | ⑨ | ⑩ ⑪ | ⑪ | ⑩ ⑪ | ⑩ ⑪ |

⑨ If picture is out of phase, reverse AFC winding.
⑩ If picture is out of phase, reverse primary or secondary of replacement width coil.
⑪ Remove original width coil and R104 from circuit. Connect yoke return to terminal #3.

TRA

| ITEM No. | IMPEDANCE PRI. | IMPEDANCE SEC. | ADMIRAL PART No. |
|---|---|---|---|
| T9 | 5.1KΩ | 3Ω | 79B49-2 |

| ITEM No. | RATINGS SIZE | RATINGS FIELD | RATINGS V. C. IMP. |
|---|---|---|---|
| SP1 | 5" | PM | 3Ω |

| ITEM No. | USE | DC RES. PRI. | DC RES. SEC. |
|---|---|---|---|
| L1A | Ant. Coil | 0Ω CT | 0Ω |
| B | Ant. Coil | 0Ω CT | 0Ω |
| C | Ant. Coil | 0Ω CT | 0Ω |
| D | Ant. Coil | 0Ω CT | 0Ω |
| E | Ant. Coil | 0Ω CT | 0Ω |
| F | Ant. Coil | 0Ω CT | 0Ω |
| G | Ant. Coil | 0Ω CT | 0Ω |
| H | Ant. Coil | 0Ω CT | 0Ω |
| I | Ant. Coil | 0Ω CT | 0Ω |
| J | Ant. Coil | 0Ω CT | 0Ω |
| K | Ant. Coil | 0Ω CT | 0Ω |
| L | Ant. Coil | 0Ω CT | 0Ω |
| L2 | Fil. Choke | 0Ω | |
| L3 | Neutr.Coil | 0Ω | |
| L4A | RF, Mixer Grid & Osc. Coil | 0Ω | |
| B | RF, Mixer Grid & Osc. Coil | 0Ω | |
| C | RF, Mixer Grid & Osc. Coil | 0Ω | |
| D | RF, Mixer Grid & Osc. Coil | 0Ω | |
| E | RF, Mixer Grid & Osc. Coil | 0Ω | |
| F | RF, Mixer Grid & Osc. Coil | 0Ω | |
| G | RF, Mixer Grid & Osc. Coil | 0Ω | |
| H | RF, Mixer Grid & Osc. Coil | 0Ω | |
| I | RF, Mixer Grid & Osc. Coil | 0Ω | |
| J | RF, Mixer Grid & Osc. Coil | 0Ω | |
| K | RF, Mixer Grid & Osc. Coil | 0Ω | |
| L | RF, Mixer Grid & Osc. Coil | 0Ω | |
| L5 | Fil. Choke | 0Ω | |
| L6 | RF Coil | 0Ω | |
| L7 | Conv.Plate | .5Ω | |
| L8 | 1st.Video IF | .2Ω | |
| L9 | Fil. Choke | 0Ω | |
| L10 | 2nd.Video IF | .4Ω | .4Ω |
| L11 | 21.25MC Trap | .1Ω | |
| L12 | 3rd.Video IF | .4Ω | .4Ω |
| L13 | 4th.Video IF | .3Ω | .3Ω |
| L14 | Series Peaking Coil | 5.3Ω | |
| L15 | Shunt Peaking Coil | 16Ω | |
| L16 | 4.5MC Trap | 4.4Ω | |
| L17 | Series Peaking Coil | 6Ω | |
| L18 | Shunt Peaking Coil | 22Ω | |
| L19 | RF Choke | 10.5Ω | |
| L20 | 1st.Sound IF | 4.6Ω | |
| L21 | 2nd.Sound IF | 4.6Ω | |
| L22 | Ratio Det. | 3.2Ω | .2ΩCT |
| L23 | Horiz. Osc. | 48Ω | |

* Detune trap
■ Enlarge mounting hole.
▲ Parallel with 4.7KΩ resistor.
♦ Disconnect capacitor in paralle
▲ Parallel with 18KΩ resistor.
¶ Parallel with 1Meg resistor.
† Disconnect capacitor.
†† Use adaptor plate and disconn

## TIONS (Continued)

ont)

| RATING | | REPLACEMENT DATA | | NOTES |
|---|---|---|---|---|
| OHMS | WATT | ADMIRAL PART No. | IRC PART No. | |
| Meg | ½ | | BTS-1Meg | |
| 20Ω | ½ | | BTS-820 | |
| 700Ω | ½ | | BTS-2700 | |
| 60Ω | ½ | | BTS-560 | |
| 60Ω | ½ | | BTS-560 | |
| 200Ω | 2 | | BTB-1200 | |
| 00KΩ 5% | ½ | | BTS-100K 5% | |
| 00KΩ 5% | ½ | | BTS-100K 5% | |
| . 7Meg | ½ | | BTS-4. 7Meg | |
| 70KΩ | ½ | | BTS-470K | |
| 7KΩ | 2 | | BTB-47K | |
| 500Ω | ½ | | BTS-1500 | |
| 600Ω | ½ | | BTS-5600 | |
| 20KΩ | ½ | | BTS-120K | |
| 00KΩ | ½ | | BTS-100K | |
| 600Ω | ½ | | BTS-5600 | |
| Meg | ½ | | BTS-1Meg | |
| 8Ω | ½ | | BTS-68 | |
| .7Ω | 1 | | | |
| 2Ω | ½ | | BTS-82 | |
| 200Ω | 2 | | BTB-8200 | |
| 000Ω | 2 | | BTB-1000 | |
| 000Ω | ½ | | BTS-1000 | |
| . 7Ω | ½ | | | |
| 250Ω | 10 | | | |
| 000Ω | 15 | | | |
| 70KΩ 5% | 1 | | | |
| 2KΩ | 5 | | | Note 2 |

or in this application.

C64C are combined in one unit.
one unit.
one unit.

## OWER)

| PLACEMENT DATA | | | | |
|---|---|---|---|---|
| it No. | Triad PART No. | RCA TYPE No. | Halldorson PART No. | Thordarson PART No. |
| 77 | | | P9733 | |

## P CIRCUITS)

| PLACEMENT DATA | | | | |
|---|---|---|---|---|
| rit No. | Triad PART No. | RCA TYPE No. | Halldorson PART No. | Thordarson PART No. |
| 03 | A-97X | 209T1 ① | B6702 | 24A87 ① |
| 22* | D-22 * & WC-11② | 232T1 * & 214R1 ② | FB411 * & RF800② | FLY-14* & WC-20 ② |
| 37① | A-102X ① | 222T1 ① | Z1804 ① | 26S52 ① |
| -73 | Y-22-1 | 222D1 | DF605 | Y-9 |
| -6⑤ | WC-12⑤⑦ | 213R1 ⑤ | RF800⑤⑧ | WC-18 ⑤ |

## MER CONNECTION DATA

acement Type Is Listed

| iad cement ections | RCA Replacement Connections | Halldorson Replacement Connections | Thordarson Replacement Connections |
|---|---|---|---|
| 9 | 10 | 9 | 9 |
| 3 & 1 | 8 | 8 | 8 & 7 |
| | 3 | 1 | 1 |
| 11 e term) | 1 | RF800 (#4 Term) | WC-20 (#1 Term) |
| 11 term) | 2 | RF800 (#3 Term) | WC-20 (#2 Term) |
| -11 & Blue rms & 1 | 212R1 1 & 2 | RF800 #1 & #2 terms T & 1 | WC-20 #3 & #4 terms T & 1 |
| ⑩ ⑪ | ⑪ | ⑩ ⑪ | ⑩ ⑪ |

ry of replacement width coil.
nect yoke return to terminal #3.

## TRANSFORMER (AUDIO OUTPUT)

| ITEM No. | IMPEDANCE | | REPLACEMENT DATA | | | | | | NOTES |
|---|---|---|---|---|---|---|---|---|---|
| | PRI. | SEC. | ADMIRAL PART No. | Stancor PART No. | Merit PART No. | Triad PART No. | Halldorson PART No. | Thordarson PART No. | |
| T9 | 5.1KΩ | 3Ω | 79B49-2 | A-3877 | A-3026 | S-6X | Z1000 | 24S51 ① | ① Drill one new mounting hole. |

## SPEAKER

| ITEM No. | RATINGS | | | REPLACEMENT DATA | | | NOTES |
|---|---|---|---|---|---|---|---|
| | SIZE | FIELD | V. C. IMP. | ADMIRAL PART No. | JENSEN PART No. | QUAM PART No. | |
| SP1 | 5" | PM | 3Ω | 78B39-3 | ST-105 Mod. P5-X | 5A1 | |

## COILS (RF-IF)

| ITEM No. | USE | DC RES. | | REPLACEMENT DATA | | | | NOTES |
|---|---|---|---|---|---|---|---|---|
| | | PRI. | SEC. | ADMIRAL PART No. | MEISSNER PART No. | MERIT PART No. | MILLER PART No. | |
| L1A | Ant. Coil | 0Ω CT | 0Ω | 94D46-52 | | | | Channel 2 |
| B | Ant. Coil | 0Ω CT | 0Ω | 94D46-53 | | | | Channel 3 |
| C | Ant. Coil | 0Ω CT | 0Ω | 94D46-54 | | | | Channel 4 |
| D | Ant. Coil | 0Ω CT | 0Ω | 94D46-55 | | | | Channel 5 |
| E | Ant. Coil | 0Ω CT | 0Ω | 94D46-56 | | | | Channel 6 |
| F | Ant. Coil | 0Ω CT | 0Ω | 94D46-57 | | | | Channel 7 |
| G | Ant. Coil | 0Ω CT | 0Ω | 94D46-58 | | | | Channel 8 |
| H | Ant. Coil | 0Ω CT | 0Ω | 94D46-59 | | | | Channel 9 |
| I | Ant. Coil | 0Ω CT | 0Ω | 94D46-60 | | | | Channel 10 |
| J | Ant. Coil | 0Ω CT | 0Ω | 94D46-61 | | | | Channel 11 |
| K | Ant. Coil | 0Ω CT | 0Ω | 94D46-62 | | | | Channel 12 |
| L | Ant. Coil | 0Ω CT | 0Ω | 94D46-63 | | | | Channel 13 |
| L2 | Fil. Choke | 0Ω | | 98A45-13 | | | | |
| L3 | Neutr. Coil | 0Ω | | 94C37-89 | | | | |
| L4A | RF, Mixer Grid & Osc. Coil | 0Ω | | 94D46-72 | | | | Channel 2 |
| B | RF, Mixer Grid & Osc. Coil | 0Ω | | 94D46-73 | | | | Channel 3 |
| C | RF, Mixer Grid & Osc. Coil | 0Ω | | 94D46-74 | | | | Channel 4 |
| D | RF, Mixer Grid & Osc. Coil | 0Ω | | 94D46-75 | | | | Channel 5 |
| E | RF, Mixer Grid & Osc. Coil | 0Ω | | 94D46-76 | | | | Channel 6 |
| F | RF, Mixer Grid & Osc. Coil | 0Ω | | 94D46-77 | | | | Channel 7 |
| G | RF, Mixer Grid & Osc. Coil | 0Ω | | 94D46-78 | | | | Channel 8 |
| H | RF, Mixer Grid & Osc. Coil | 0Ω | | 94D46-79 | | | | Channel 9 |
| I | RF, Mixer Grid & Osc. Coil | 0Ω | | 94D46-80 | | | | Channel 10 |
| J | RF, Mixer Grid & Osc. Coil | 0Ω | | 94D46-81 | | | | Channel 11 |
| K | RF, Mixer Grid & Osc. Coil | 0Ω | | 94D46-82 | | | | Channel 12 |
| L | RF, Mixer Grid & Osc. Coil | 0Ω | | 94D46-83 | | | | Channel 13 |
| L5 | Fil. Choke | 0Ω | | 98A45-14 | | | | |
| L6 | RF Coil | 0Ω | | | | | | |
| L7 | Conv. Plate | .5Ω | | 98A45-77 | | | | |
| L8 | 1st. Video IF | .2Ω | | 72B109-1 | 17-1001 * | TV-100 * | 6186 * | |
| L9 | Fil. Choke | 0Ω | | 73A2-5 | 19-3001 | TV-189 | 4604 | .6 Microhenry |
| L10 | 2nd. Video IF | .4Ω | .4Ω | 72C96-29 | 17-1062 | | 6250 | |
| L11 | 21.25MC Trap | .1Ω | | 72C96-30 | 19-1020 ■ | TV-112 ■ | 6171 ■ | |
| L12 | 3rd. Video IF | .4Ω | .4Ω | 72D111-1 | 17-1066 | | 6249 | |
| L13 | 4th. Video IF | .3Ω | .3Ω | 72B110-1 | | | | |
| L14 | Series Peaking Coil | 5.3Ω | | 73A5-15 | 19-3180 ▲ | TV-184 ▲ | 6180 ▲ | 190 Microhenries, wound on 4.7KΩ resistor |
| L15 | Shunt Peaking Coil | 16Ω | | 73A5-7 | 19-3500 | TV-188 | 6174 | 500 Microhenries |
| L16 | 4.5MC Trap | 4.4Ω | | 72B99-3 | 20-1005 ♦ | TV-151 | 1470 | |
| L17 | Series Peaking Coil | 6Ω | | 73A5-14 | 19-3250 ◓ | TV-185 ◓ | 6181 ◓ | 250 Microhenries, wound on 18KΩ resistor |
| L18 | Shunt Peaking Coil | 22Ω | | 73A11-1 | | | | 790 Microhenries wound on 10KΩ resistor |
| L19 | RF Choke | 10.5Ω | | 73A5-2 | | | 4630 ¶ | 58 Microhenries, wound on 1Meg resistor |
| L20 | 1st. Sound IF | 4.6Ω | | 72B99-4 | 17-3400 | TV-151 | 1470 | |
| L21 | 2nd. Sound IF | 4.6Ω | | 72B99-4 | 17-3400 | TV-151 | 1470 | |
| L22 | Ratio Det. | 3.2Ω | .2ΩCT | 72B68-2 | 17-1033 † | TV-110 † | 1468 or 6205 †† | Tertiary winding -.9Ω |
| L23 | Horiz. Osc. | 48Ω | | 79A18-4 | 19-1576 | TV-163 | 6210 | |

* Detune trap
■ Enlarge mounting hole.
▲ Parallel with 4.7KΩ resistor.
♦ Disconnect capacitor in parallel.
◓ Parallel with 18KΩ resistor.
¶ Parallel with 1Meg resistor.
† Disconnect capacitor.
†† Use adaptor plate and disconnect capacitor.

# PARTS LIST AND DESCRIPTIONS (Continued)

## FUSES

| ITEM No. | TYPE | RATING | REPLACEMENT DATA | | | | | |
|---|---|---|---|---|---|---|---|---|
| | | | ADMIRAL PART No. | | LITTELFUSE PART No. | | BUSS PART No. | |
| | | | FUSE | HOLDER | FUSE | HOLDER | FUSE | HOLDER |
| M1 | 8AG | 3/8A 250V | 84A43 | 84A5-1 | 362.375 (3/8A-8AG) | 387001 | AGX 3/8 | 4520 |

## MISCELLANEOUS

| ITEM No. | PART NAME | ADMIRAL PART No. | NOTES |
|---|---|---|---|
| M2 | Tuner | 94D61-1 | VHF-All chassis |
| | Tuner | A4000 | UHF-Chassis 22G2, 22G2Z, 22N2 |
| M3 | Trap | 73C12-1 | Adjacent channel assembly. |
| M4 | Centering Magnet | | Part of focus coil (T6) |
| M5 | Ion trap | 94A15-3 | |

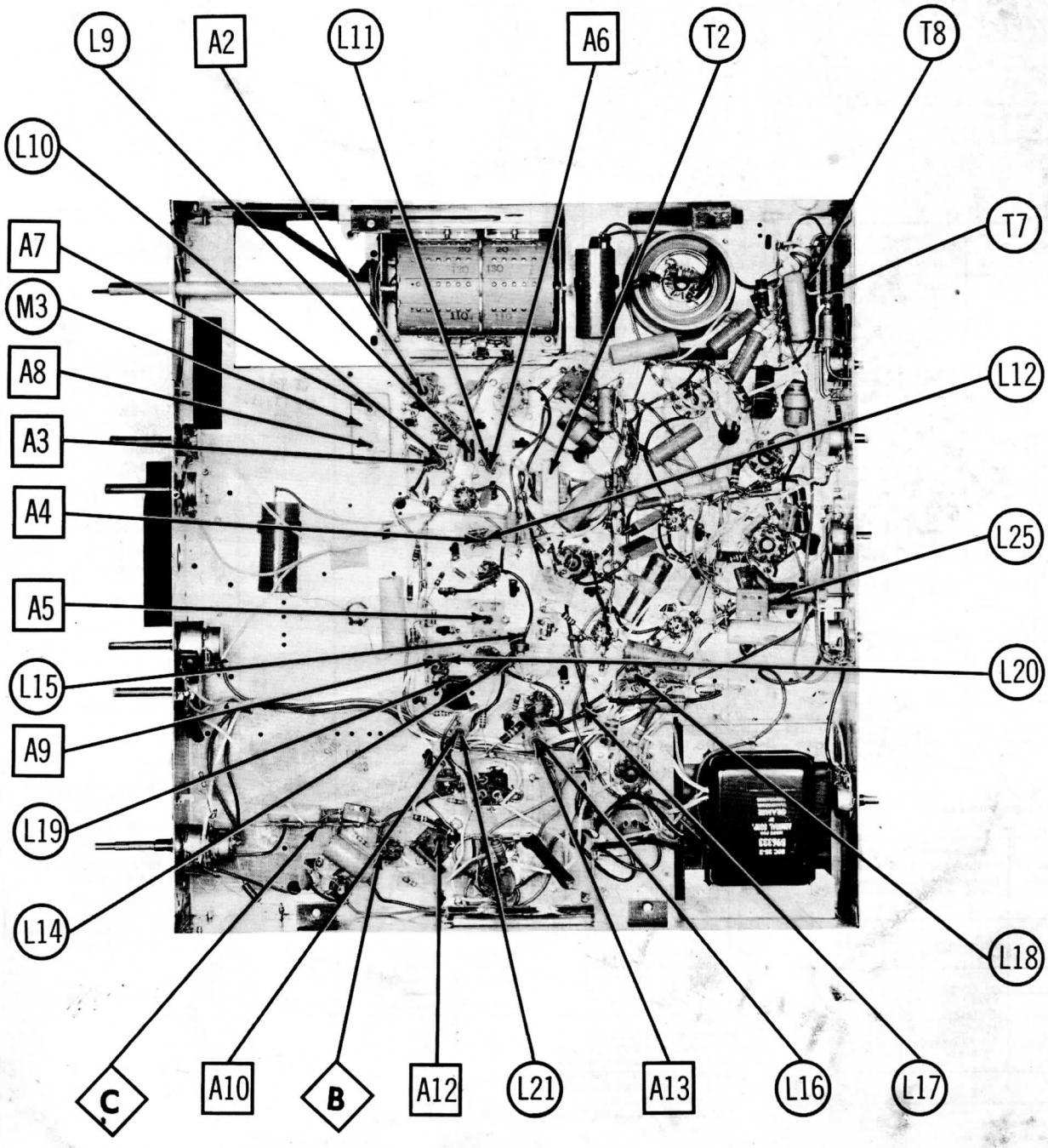


CHASSIS BOTTOM VIEW-TRANS., INDUCTOR & ALIGN. IDENTIFICATION

# SERVICING IN THE FIELD

TUNER OSCILLATOR ADJUSTMENTS

Touch-up adjustments of the VHF tuner oscillator circuit may be accomplished by removal of the channel selector and fine tuning knobs. The adjustments are accessible, one at a time, thru the small hole in the cabinet to the right of the channel selector shaft.

PICTURE TUBE SAFETY GLASS CLEANING

For picture tube safety glass cleaning, it is necessary to remove chassis. (See disassembly instructions).

PICTURE TUBE REMOVAL

For picture tube removal it is necessary to remove chassis. (See disassembly instructions).

SERVICE ADJUSTMENT LOCATION

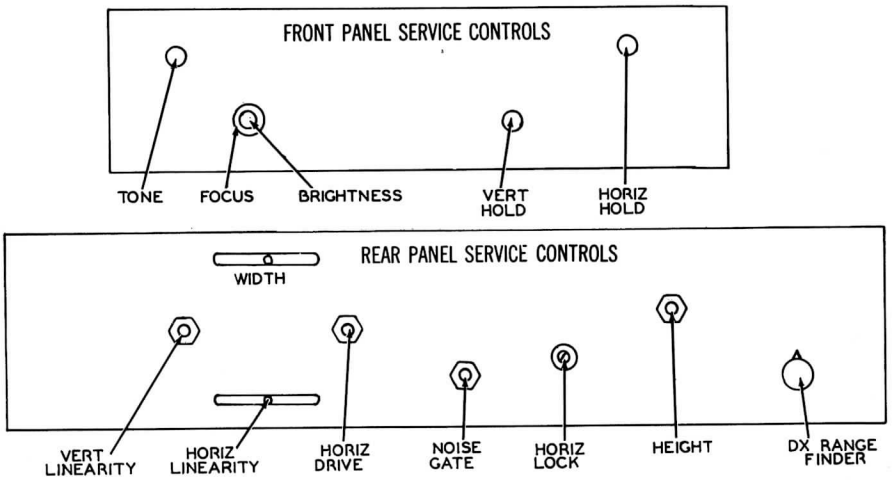


SPECIAL ADJUSTMENTS - DX RANGE FINDER

Reception of weak signals can often be improved by advancing the DX range finder in a clockwise direction. However, if the control is turned too far in this direction the picture may disappear entirely on strong signals.

HORIZONTAL OSCILLATOR FIELD ADJUSTMENT

Adjustment of the horizontal oscillator circuit can be made from the rear panel of the chassis. Set the horizontal hold control at the mid-position of its range and adjust the horizontal lock slug (L23) until the picture synchronizes horizontally.

SOUND IF DETECTOR BUZZ ADJUSTMENT

To eliminate sound IF detector buzz, adjust the ratio detector secondary (L22) located on bottom of chassis. (See tube placement chart).

FUSES

One fuse is used for horizontal sweep circuit protection. (For location see tube placement chart).

CENTERING

Centering is accomplished mechanically by means of a centering lever on the PM focusing assembly. Adjust the centering lever from side to side and up and down until the picture is properly centered.

# DISASSEMBLY INSTRUCTIONS

1. Remove 5 push-on type control knobs from front panel. (Focus knob behing control door).
2. Remove 10 wood screws and 2 metal screws. Remove rear cover.
3. Disconnect speaker leads, depress 2 spring clips on speaker mounting board and slide speaker out.
4. Remove 4 chassis bolts. Remove chassis.

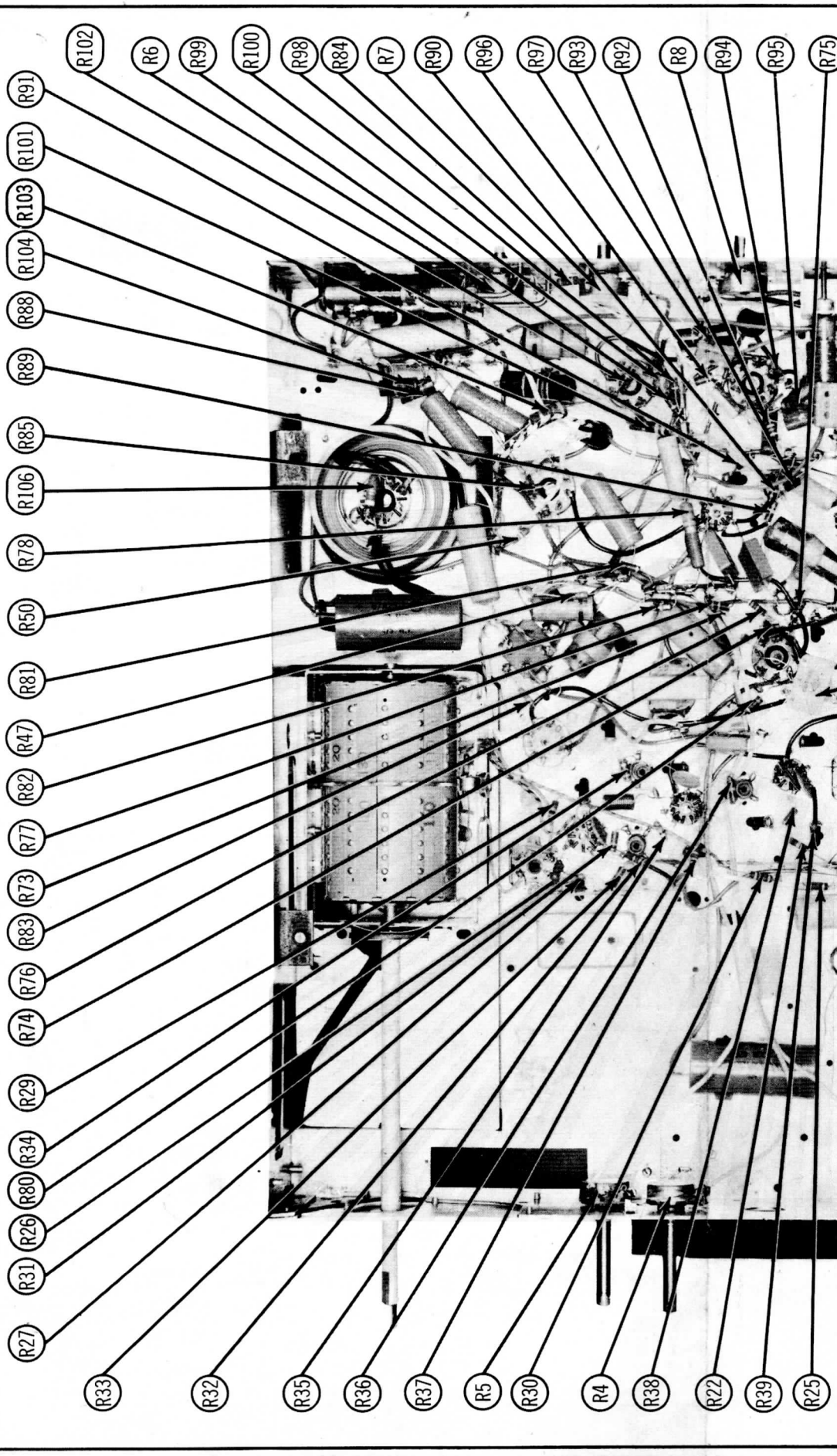
R102
R6
R99
R100
R98
R84
R7
R90
R96
R97
R93
R92
R8
R94
R95
R75
R91
R101
R103
R104
R88
R89
R85
R106
R78
R50
R81
R47
R82
R77
R73
R83
R76
R74
R29
R34
R80
R26
R31
R27
R33
R32
R35
R36
R37
R5
R30
R4
R38
R22
R39
R25

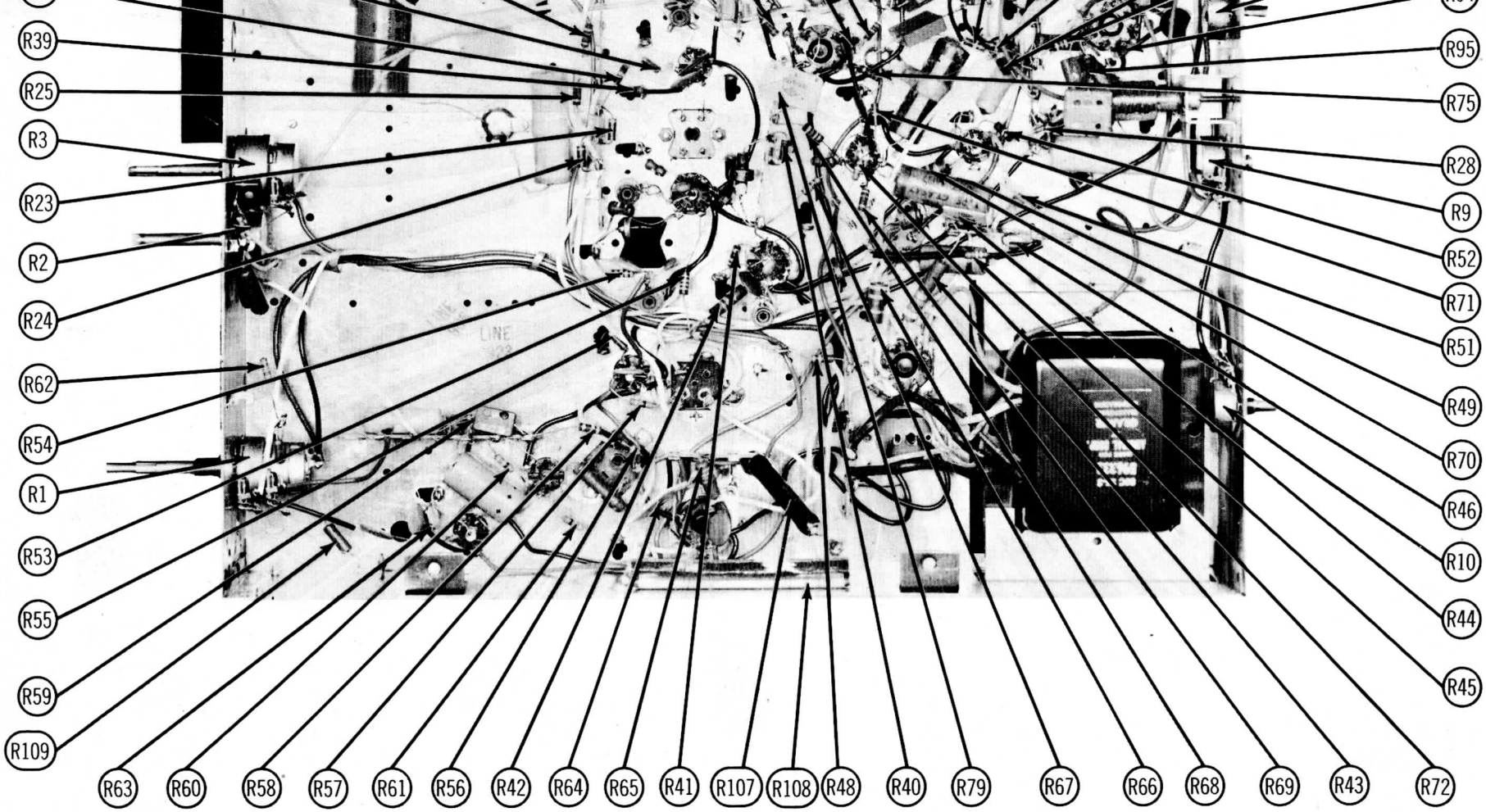


**CHASSIS BOTTOM VIEW-RESISTOR IDENTIFICATION**