# ARVIN MODELS 6175TM, 6179TM, (Ch. TE-331, TE-331-2)

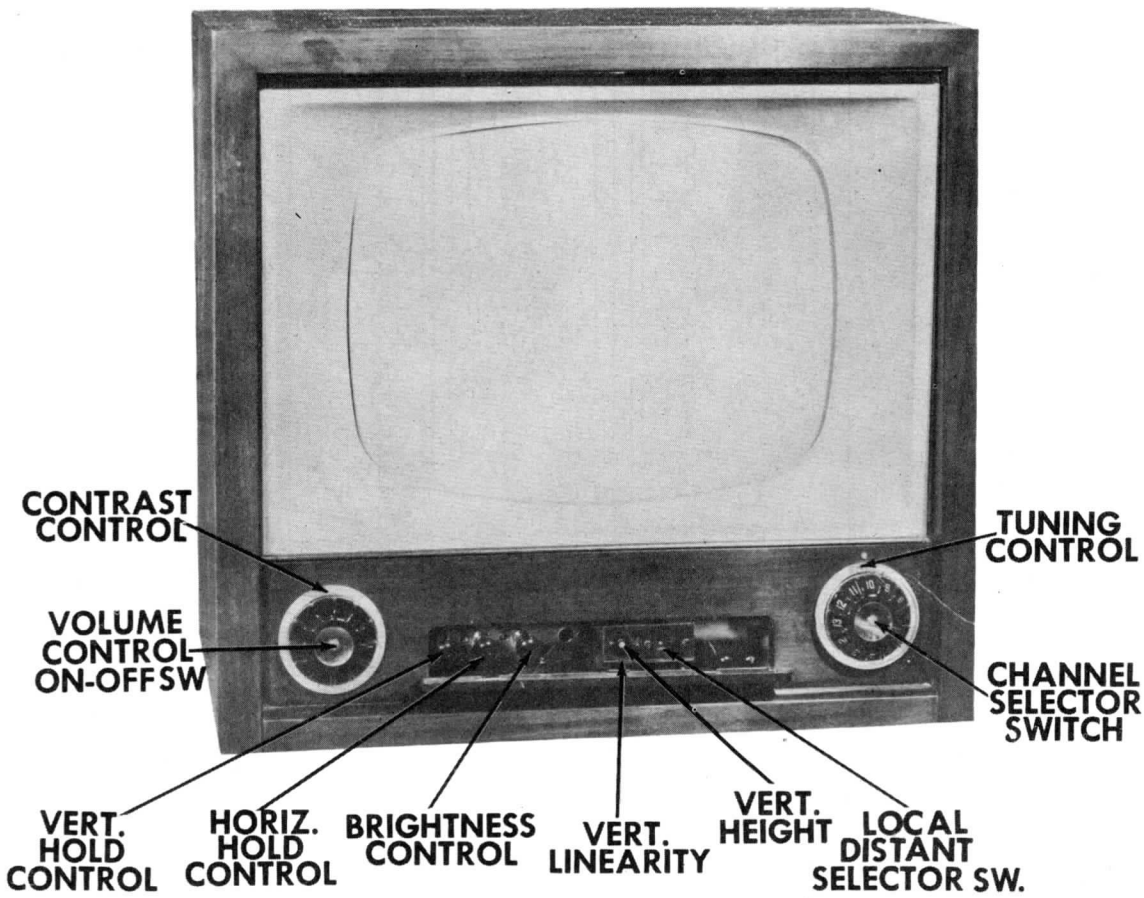


ARVIN 6175TM

| | |
|---|---|
| TRADE NAME | Arvin Models 6175TM, 6179TM (Ch. TE-331, TE-331-2) |
| MANUFACTURER | Arvin Industries, Columbus, Indiana. |
| TYPE SET | Television Receiver |
| TUBES | Twenty-two |
| POWER SUPPLY | 110-120 Volts AC-60 Cycle |
| RATING | 2 Amp. @ 117 Volts AC |
| TUNING RANGE- | CHANNELS 2 thru 13 |

## INDEX

Alignment Instructions ..... 6, 7
Disassembly Instructions ..... 11
Horizontal Sweep Circuit Adjustments ..... 11
Parts List and Descriptions ..... 12, 13, 14
Photographs
Cabinet - Rear View ..... 11
Capacitor and Alignment Identification ..... 4, 9
Chassis - Top View ..... 3
Photographs (Con't)
RF Tuner ..... 10
Resistor and Inductor Identification ..... 15, 16
Resistance Measurements ..... 8
Schematic ..... 2
Tube Failure Check Chart ..... 5
Tube Placement Chart (Bottom View) ..... 8
Tube Placement Chart (Top View) ..... 5

HOWARD W. SAMS & CO., INC. • Indianapolis 5, Indiana

"The listing of any available replacement part herein does not constitute in any case a recommendation, warranty or guaranty by Howard W. Sams & Co., Inc., as to the quality and suitability of such replacement part. The numbers of these parts have been compiled from information furnished to Howard W. Sams & Co., Inc., by the manufacturers of the particular type of replacement part listed." "Reproduction or use, without express permission, of editorial or pictorial content, in any manner, is prohibited. No patent liability is assumed with respect to the use of the information contained herein. Copyright 1952 by Howard W. Sams & Co., Inc., Indianapolis 5, Indiana, U. S. of America. Copyright under International Copyright Union. All rights reserved under Inter-American Copyright Union (1910) by Howard W. Sams & Co., Inc." Printed in U. S. of America

DATE 10-52 SET 181 FOLDER 4

ARVIN MODELS 6175TM, 6179TM, (Ch. TE-331, TE-331-2)

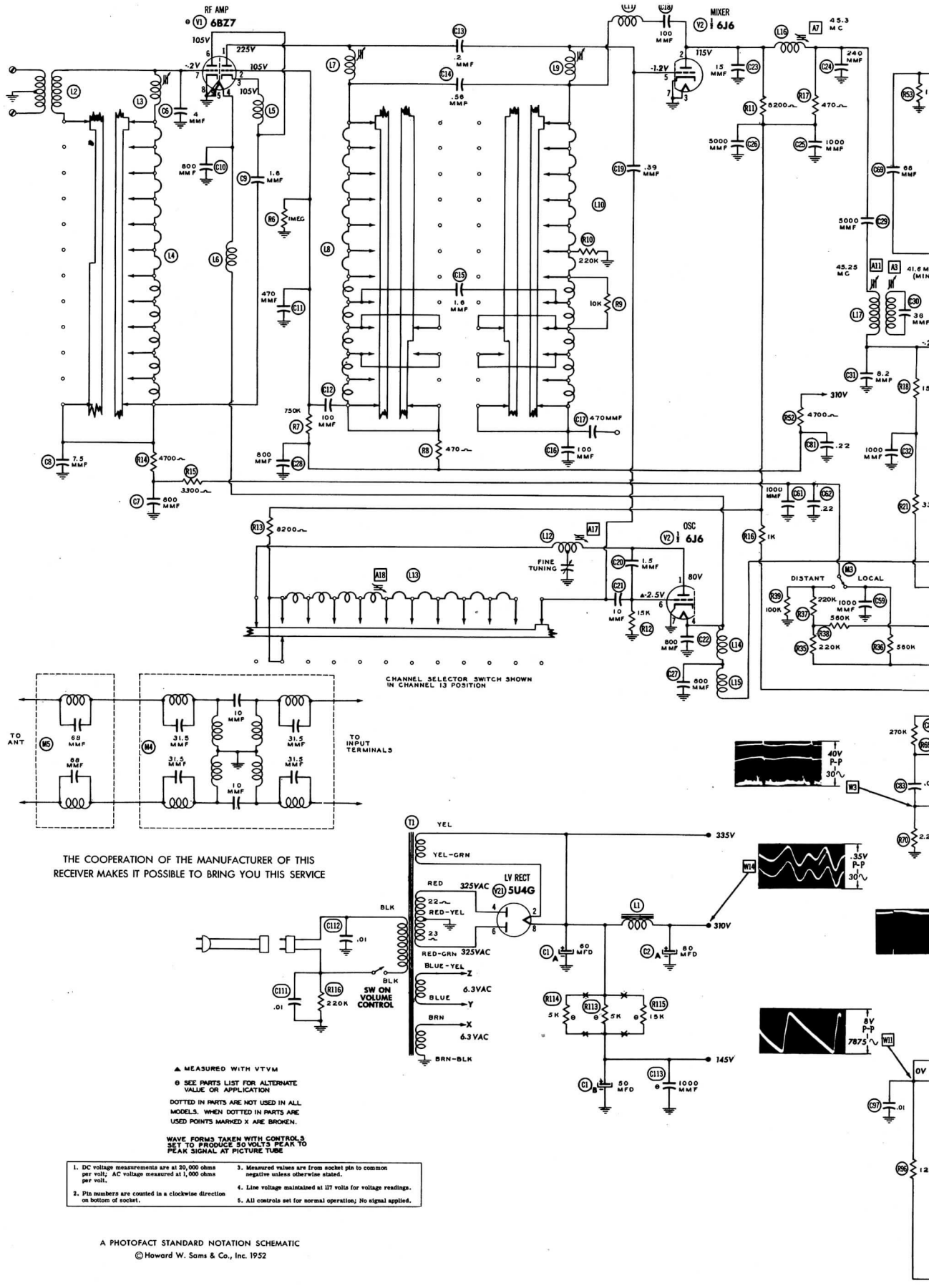


A PHOTOFACT STANDARD NOTATION SCHEMATIC

© Howard W. Sams & Co., Inc. 1952

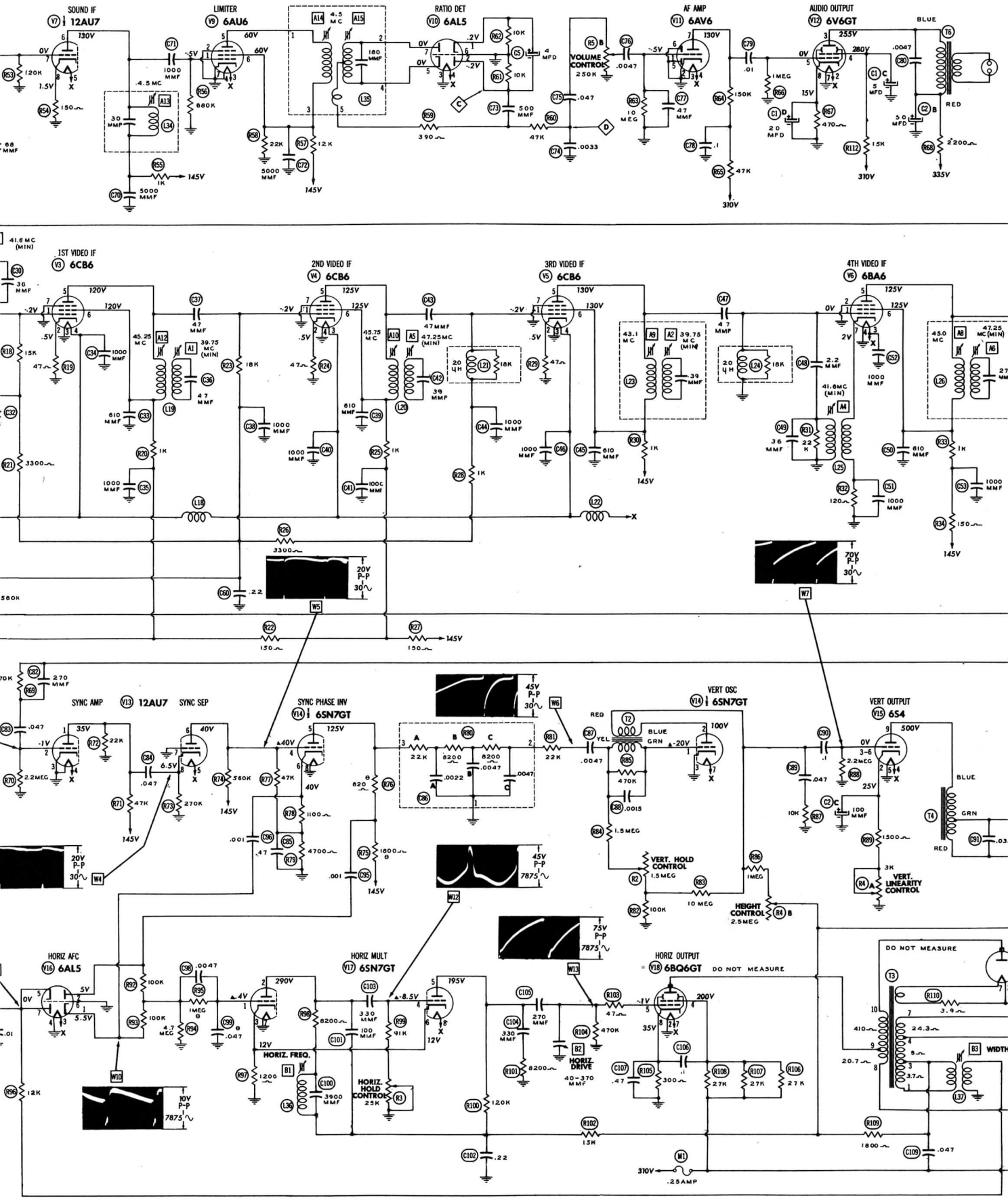
SOUND IF
V7 12AU7
LIMITER
V9 6AU6
RATIO DET
V10 6AL5
AF AMP
V11 6AV6
AUDIO OUTPUT
V12 6V6GT
VOLUME CONTROL 250K
1ST VIDEO IF
V3 6CB6
2ND VIDEO IF
V4 6CB6
3RD VIDEO IF
V5 6CB6
4TH VIDEO IF
V6 6BA6
SYNC AMP
V13 12AU7
SYNC SEP
SYNC PHASE INV
V14 6SN7GT
VERT OSC
V14 6SN7GT
VERT OUTPUT
V15 6S4
VERT. HOLD CONTROL 1.5MEG
HEIGHT CONTROL 2.5MEG
VERT. LINEARITY CONTROL
HORIZ AFC
V16 6AL5
HORIZ MULT
V17 6SN7GT
HORIZ. FREQ.
HORIZ. HOLD CONTROL 25K
HORIZ. DRIVE 40-370 MMF
HORIZ OUTPUT
V18 6BQ6GT
DO NOT MEASURE
WIDTH
310V
335V
145V
.25AMP

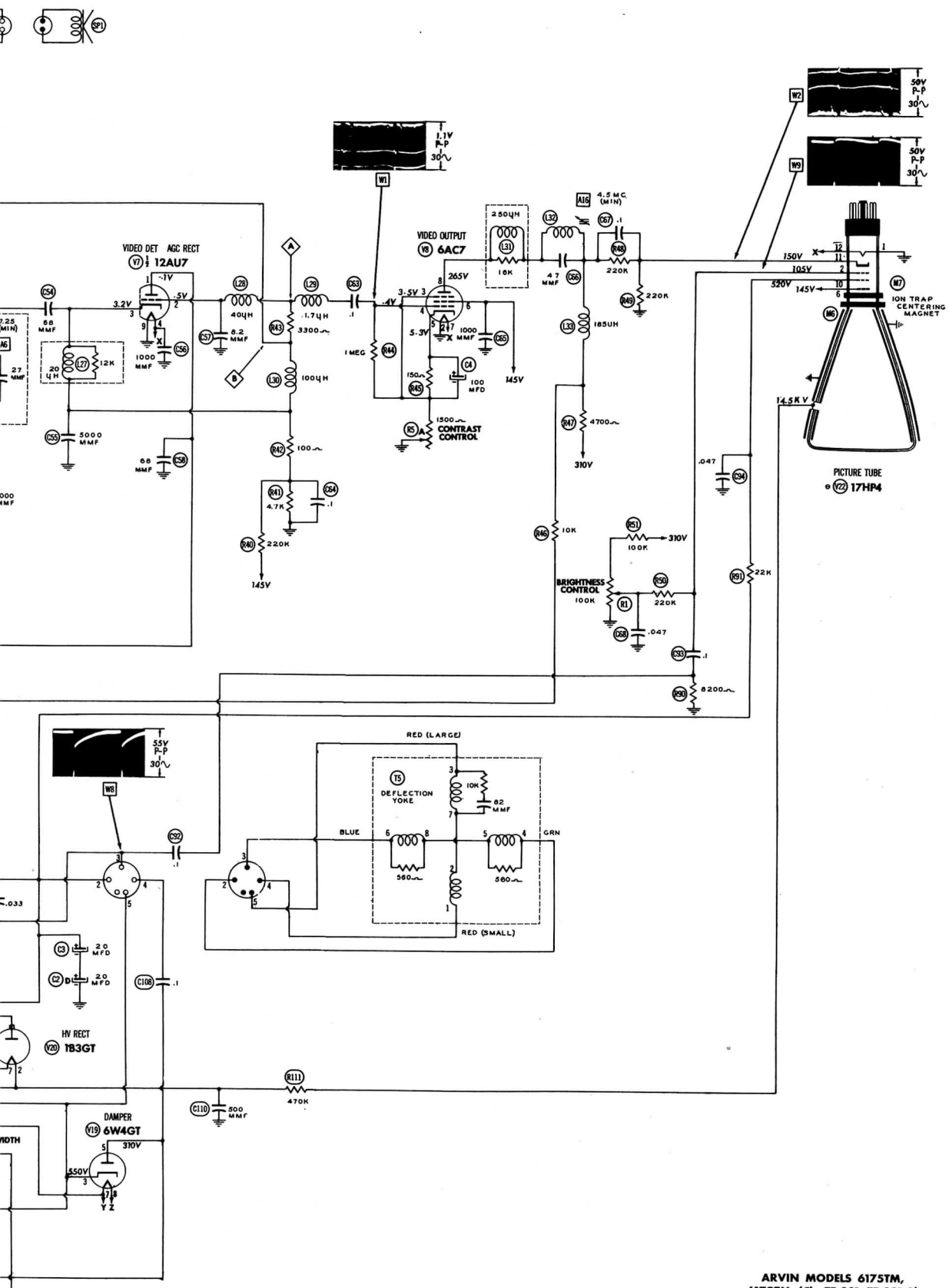


ARVIN MODELS 6175TM,
6179TM, (Ch. TE-331, TE-331-2)

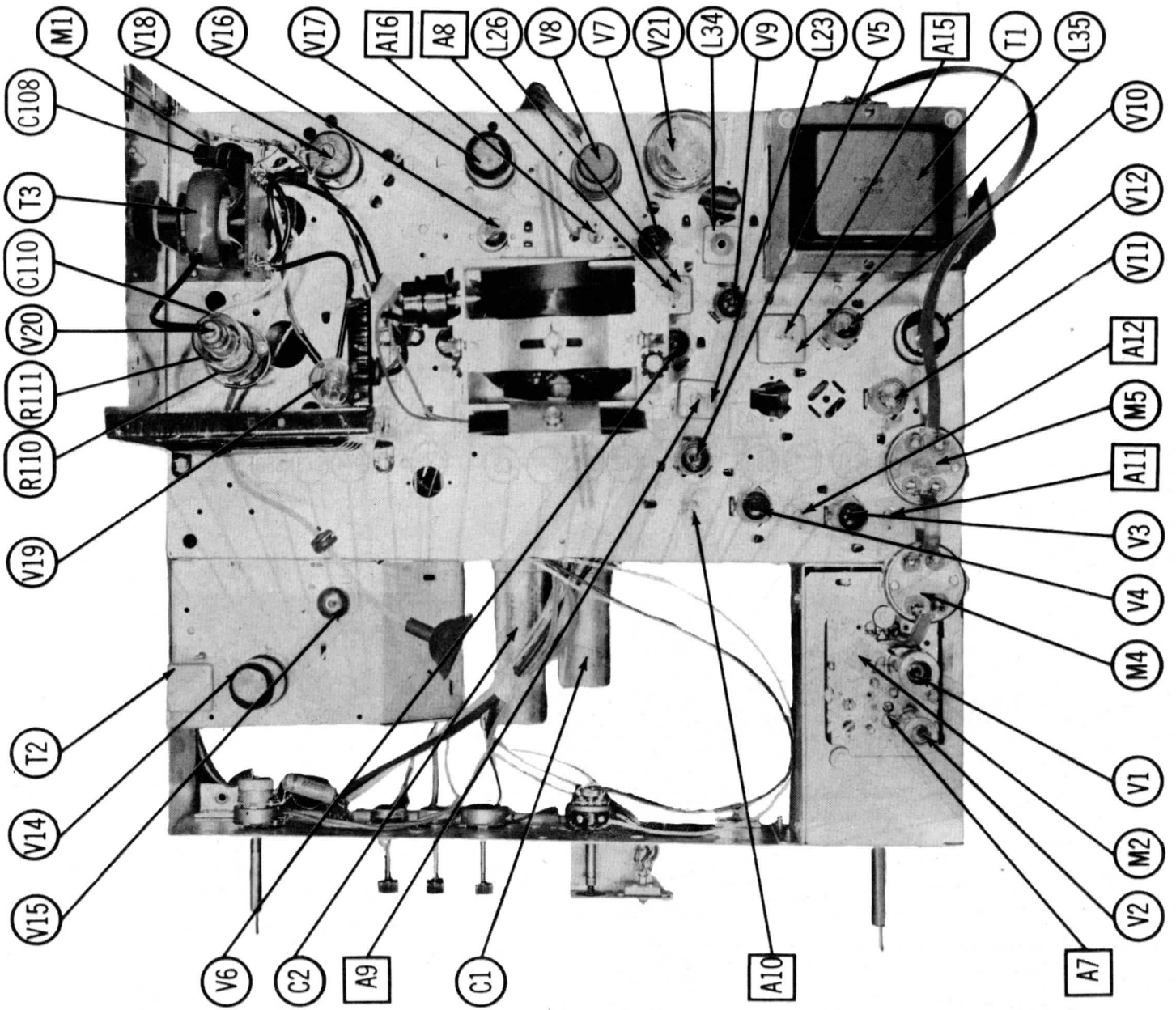


CHASSIS TOP VIEW

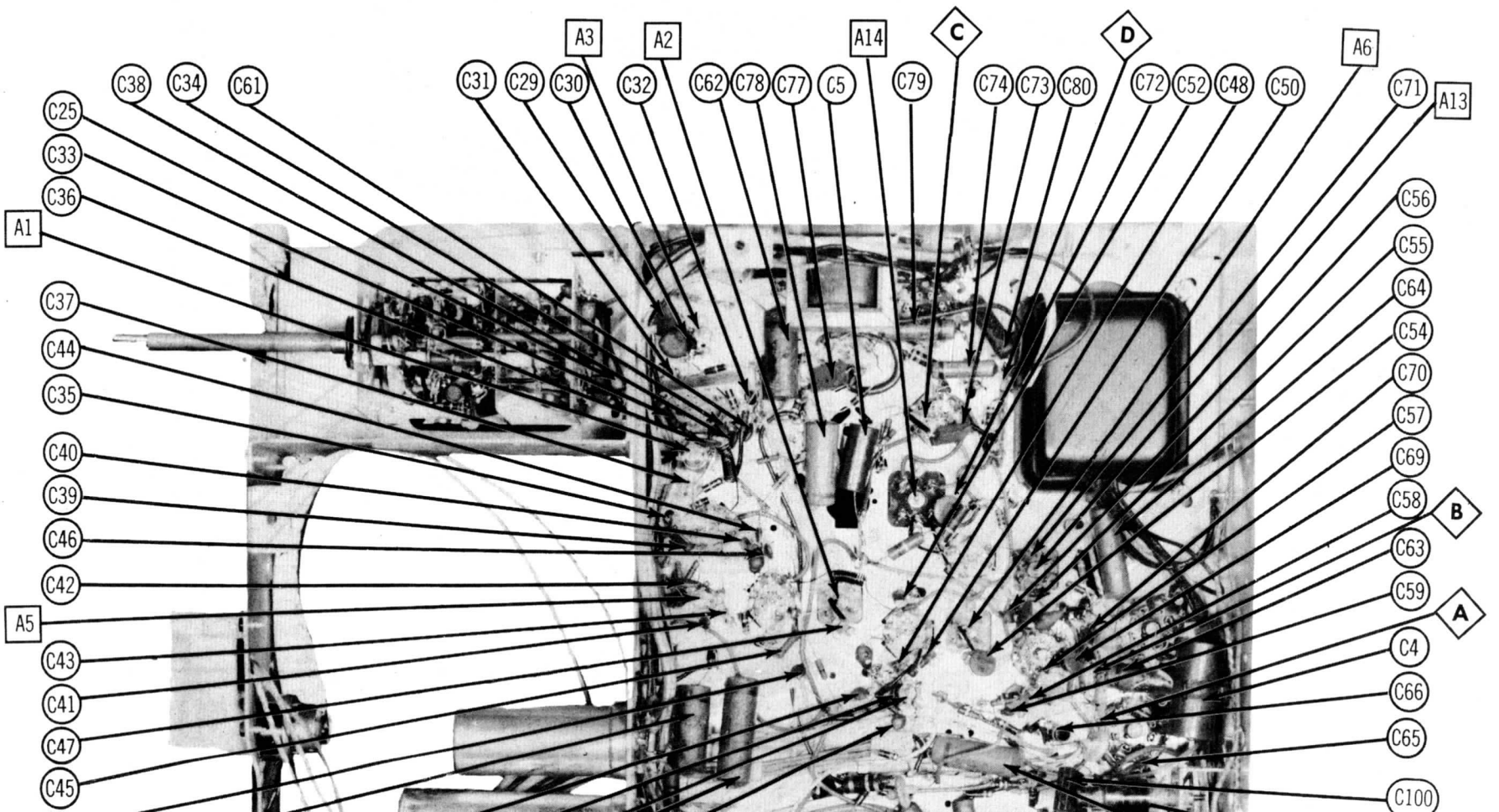
A1
A2
A3
A5
A6
A13
A14
B
C
D
C25
C33
C36
C38
C34
C61
C31
C29
C30
C32
C62
C78
C77
C5
C79
C74
C73
C80
C72
C52
C48
C50
C71
C56
C55
C64
C54
C70
C57
C69
C58
C63
C59
C4
C66
C65
C100
C37
C44
C35
C40
C39
C46
C42
C43
C41
C47
C45

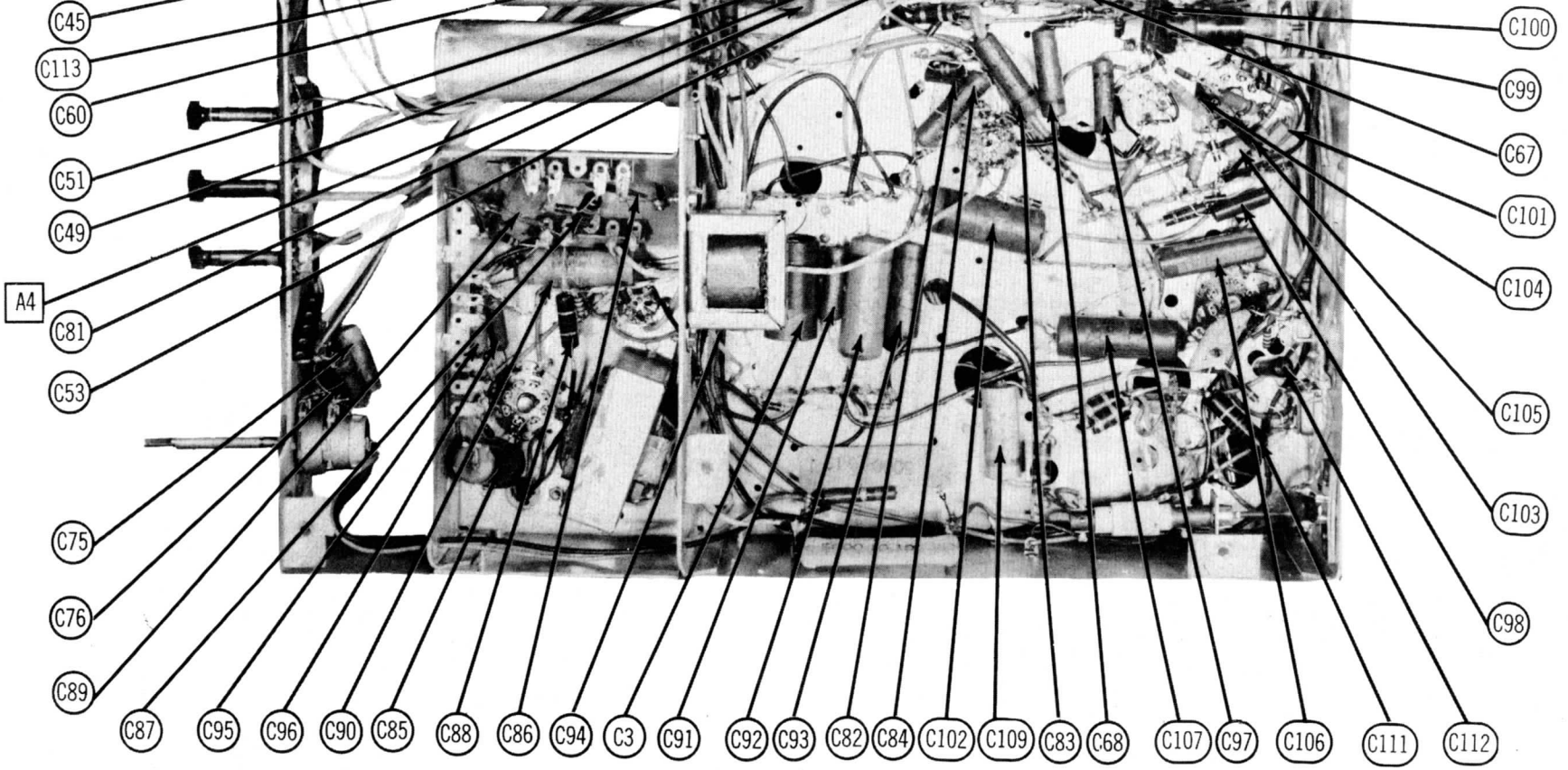


# CHASSIS BOTTOM VIEW- CAPACITOR AND ALIGNMENT IDENTIFICATION

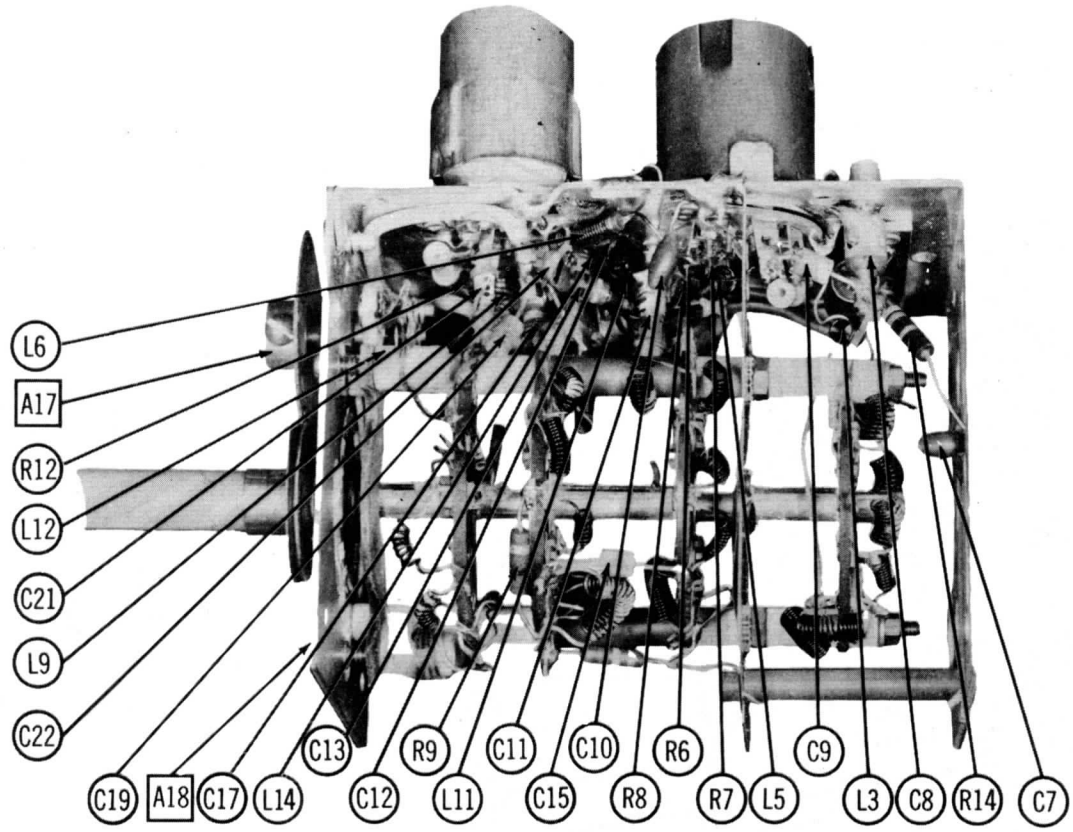


RF TUNER-RIGHT SIDE

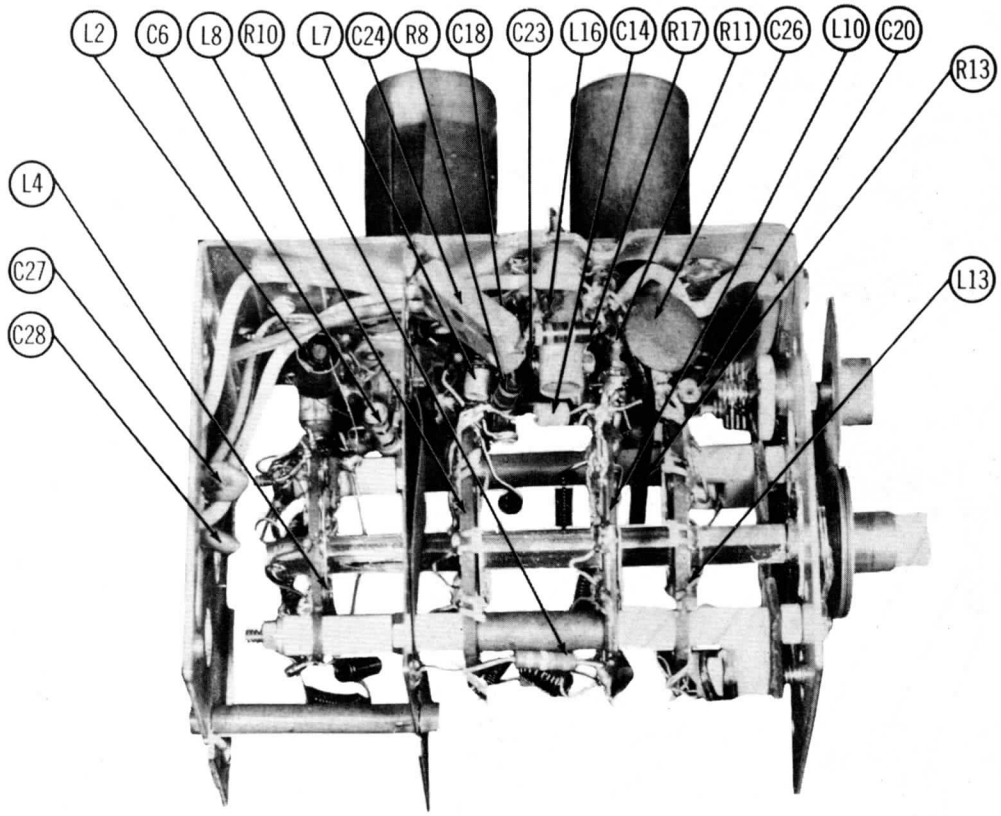


RF TUNER-LEFT SIDE

# TUBE PLACEMENT CHART

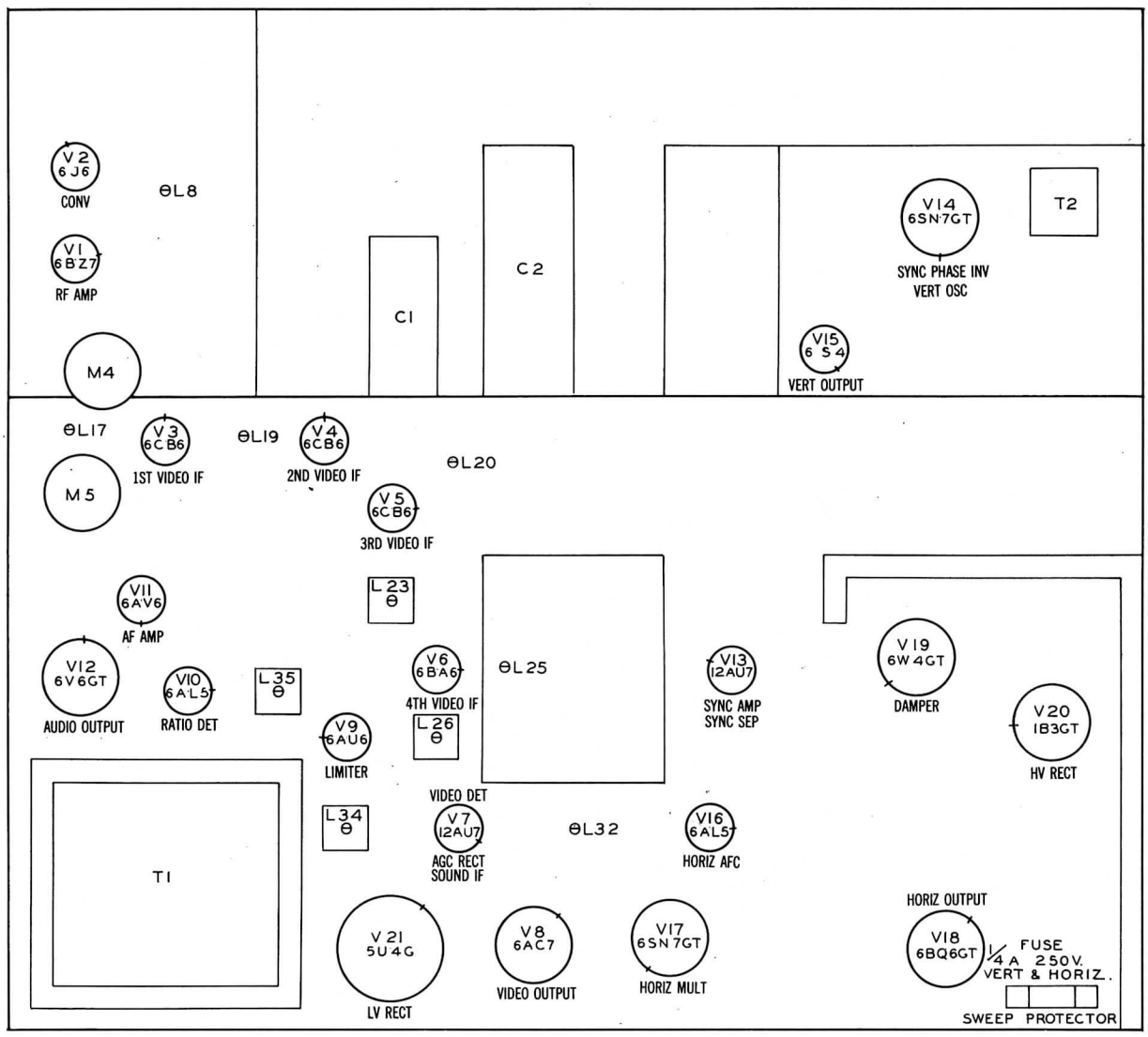


**TOP VIEW**

# TUBE FAILURE CHECK CHART

The following chart lists tubes whose failures are most likely to produce the indicated symptoms. Refer to tube placement chart for location and type of tube.

**POWER SUPPLY FAILURE**
No raster, no sound-V21

**LOSS OF PICTURE OR SOUND**
No pic, no sound, has raster-V2, V3, V4, V5, V6, V7
No pic, no sound, has snow-V1, V2, V3
No pic, has sound, has raster-V8, V22
Has pic, no sound-V7, V9, V10, V11, V12
Overloaded Picture-V7

**SYNC FAILURE**
No vert. sync-V14
No horiz. sync-V14, V16, V17
No vert. or horiz. sync-V13, V14

**SWEEP FAILURE**
No raster, has sound-V17, V18, V19, V20, V21, Fuse (M1)
No vertical deflection-V15
Poor vert linearity or foldover-V14, V15
Poor horiz. linearity or foldover-V17, V18, V19
Narrow picture-V17, V18, V19, V20, V21
Vert off freq.-V14
Horiz. off freq.-V14, V16, V17

# ALIGNMENT INSTRUCTIONS

**ALIGNMENT INSTRUCTIONS—READ CAREFULLY BEFORE ATTEMPTING ALIGNMENT**

The high voltage shock hazard can be eliminated by removing the horizontal multivibrator tube, V17.

## VIDEO IF ALIGNMENT

Remove the converter tube, V2, from its socket and replace with a 6J6 which has pin 1 removed. This will disable the local oscillator and reduce the possibility of erroneous indications.
Connect the negative lead of a 3 volt battery to the junction of R35 and R37. Connect the positive lead to chassis.
Set the Local-Distance switch to local position.

| | | | | | | | |
|---|---|---|---|---|---|---|---|
| 1. | Direct | High side to an ungrounded tube shield floating over dummy converter tube V2. Low side to chassis. | 39.75MC | Any | DC probe to point (A) Common to point (B) | A1, A2 | Adjust for MINIMUM deflection. |
| 2. | " | " | 41.6MC | " | " | A3, A4 | " |
| 3. | " | " | 47.25MC | " | " | A5, A6 | " |
| 4. | " | " | 45.3MC | " | " | A7 | Preset core to maximum clockwise position. Adjust for maximum deflection. |
| 5. | " | " | 45MC | " | " | A8 | Adjust for maximum deflection. |
| 6. | " | " | 43.1MC | " | " | A9 | " |
| 7. | " | " | 45.75MC | " | " | A10 | " |
| 8. | " | " | 42.25MC | " | " | A11, A12 | " |

## OVERALL VIDEO IF RESPONSE CHECK

Connect the synchronized sweep voltage from the signal generator to the horizontal input of the oscilloscope for horizontal deflection.

| | DUMMY ANTENNA | SWEEP GENERATOR COUPLING | SWEEP GENERATOR FREQUENCY | MARKER GENERATOR FREQUENCY | CHANNEL | CONNECT SCOPE | ADJUST | REMARKS |
|---|---|---|---|---|---|---|---|---|
| 9. | Direct | High side to an ungrounded tube shield floating over dummy converter tube, V2. Low side to chassis. | 44MC (10MC Swp) | 41.6MC<br>42.25MC<br>42.75MC<br>45.MC<br>45.75MC | Any | Vert. amp. to point (A). Low side to chassis. | | Check for response curve similar to fig.1 with markers as shown. If necessary retouch A7 thru A12 for desired response. |

## SOUND IF ALIGNMENT USING AM SIGNAL GENERATOR AND VTVM

| | DUMMY ANTENNA | SIGNAL GENERATOR COUPLING | SIGNAL GENERATOR FREQUENCY | CHANNEL | CONNECT VTVM | ADJUST | REMARKS |
|---|---|---|---|---|---|---|---|
| 10. | .001MFD | High side to point (A) Low side to chassis. | 4.5MC (Unmod.) | Any | DC probe to point (C) Common to chassis. | A13, A14 | Adjust for maximum deflection. |
| 11. | " | " | " | " | DC probe to point (D) Common to chassis. | A15 | Adjust for zero reading. A positive and negative reading will be obtained on either side to the correct setting. |

## SOUND IF ALIGNMENT USING FM SIGNAL GENERATOR AND OSCILLOSCOPE

Use frequency modulated signal with 60~ modulation and 450KC sweep. Use 120~ sawtooth voltage in scope for horizontal deflection.

| | DUMMY ANTENNA | SWEEP GENERATOR COUPLING | SWEEP GENERATOR FREQUENCY | MARKER GENERATOR FREQUENCY | CHANNEL | CONNECT SCOPE | ADJUST | REMARKS |
|---|---|---|---|---|---|---|---|---|
| 10. | .001MFD | High side to point (A). Low side to chassis. | 4.5MC (450KC Swp) | 4.5MC | Any | Vert. amp. to point (C) Low side to chassis. | A13, A14 | Disconnect stabilizer capacitor C5. Adjust for curve of maximum amplitude and symmetry as per fig. 2. |
| 11. | " | " | " | " | " | Vert. amp. to point (D). Low side to chassis. | A15 | Reconnect capacitor C5. Adjust so that 4.5MC occurs at center of crossover lines as in fig. 3. |

## 4.5MC TRAP ALIGNMENT

| | DUMMY ANTENNA | SIGNAL GENERATOR COUPLING | SIGNAL GENERATOR FREQUENCY | CHANNEL | CONNECT VTVM | ADJUST | REMARKS |
|---|---|---|---|---|---|---|---|
| 12. | .001MFD | High side to point (A) Low side to chassis. | 4.5MC (Unmod) | Any | DC probe thru detector (fig 4) to pin 11 of picture tube. | A16 | Adjust MINIMUM deflection. |

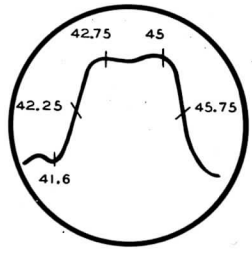

FIG. 1

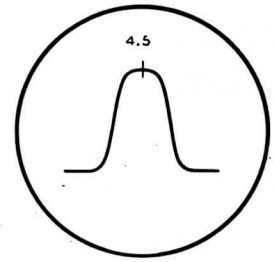

FIG. 2

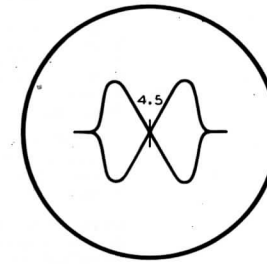

FIG. 3

# ALIGNMENT INSTRUCTIONS (CONT.)

## OSCILLATOR ALIGNMENT

Remove the dummy converter tube and replace the original 6J6 in its socket.
Connect the synchronized sweep voltage from the signal generator to the horizontal input of the oscilloscope for horizontal deflection.
The sweep generator output lead should be terminated with its characteristic impedance, usually 50 ohms.
Set the fine tuning control to the mid-position of its range.

| | DUMMY ANTENNA | SWEEP GENERATOR COUPLING | SWEEP GENERATOR FREQUENCY | MARKER GENERATOR FREQUENCY | CHANNEL | CONNECT SCOPE | ADJUST | REMARKS |
|---|---|---|---|---|---|---|---|---|
| 13. | Two 120Ω Carbon Resistors | Across antenna terminals with 120Ω in each lead. | 213MC (10MC Swp) | 215.75MC | 13 | Vert. amp. to point (A). Low side to chassis. | A17 | Adjust to place sound marker in notch as in fig. 5. |
| 14. | " | " | 207MC (10MC Swp) | 209.75MC | 12 | " | | Check for sound marker placement as in fig. 5. If necessary make compromise adjustment of A17 for any individual channel then check all other high band channels to see that they have not been affected. |
| | | | 201MC (10MC Swp) | 203.75MC | 11 | | | |
| | | | 195MC (10MC Swp) | 197.75MC | 10 | | | |
| | | | 189MC (10MC Swp) | 191.75MC | 9 | | | |
| | | | 183MC (10MC Swp) | 185.75MC | 8 | | | |
| | | | 177MC (10MC Swp) | 179.75MC | 7 | | | |
| 15. | " | " | 85MC (10MC Swp) | 87.75MC | 6 | " | A18 | Adjust to place sound marker in notch as in fig. 5. |
| 16. | " | " | 79MC (10MC Swp) | 81.75MC | 5 | " | | Check for sound marker placement as in fig. 5. If necessary make compromise adjustment of A18 for any individual channel then check all other channels to see that they have not been seriously affected. |
| | | | 69MC (10MC Swp) | 71.75MC | 4 | | | |
| | | | 63MC (10MC Swp) | 65.75MC | 3 | | | |
| | | | 57MC (10MC Swp) | 59.75MC | 2 | | | |

THE RF AND MIXER PORTIONS OF THIS RECEIVER HAVE BEEN PROPERLY ALIGNED AT THE FACTORY, AND ARE VERY STABLE. ALIGNMENT OF THIS PORTION SHOULD NOT BE REQUIRED IN THE FIELD.

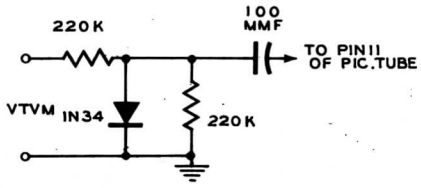


FIG. 4

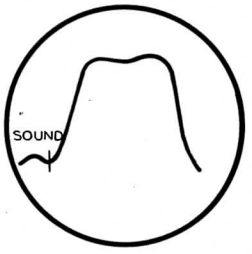


FIG. 5

# RESISTANCE MEASUREMENTS

| Item | Tube | Pin 1 | Pin 2 | Pin 3 | Pin 4 | Pin 5 | Pin 6 | Pin 7 | Pin 8 | Pin 9 |
|---|---|---|---|---|---|---|---|---|---|---|
| V 1 | 6BZ7 | †5.3KΩ | †450KΩ | INF | .3Ω | 0Ω | INF | 1.1 Meg. | 0Ω | 0Ω |
| V 2 | 6J6 | †11.5KΩ | †3.8KΩ | 0Ω | .3Ω | 220KΩ | 15KΩ | 0Ω | | |
| V 3 | 6CB6 | 900KΩ | 47Ω | 0Ω | .1Ω | †3.3KΩ | †3.3KΩ | 0Ω | | |
| V 4 | 6CB6 | 900KΩ | 47Ω | .1Ω | 0Ω | †3.1KΩ | †3.1KΩ | 0Ω | | |
| V 5 | 6CB6 | 880KΩ | 47Ω | 0Ω | .1Ω | †3KΩ | †3KΩ | 0Ω | | |
| V 6 | 6BA6 | 1.8Ω | 0Ω | .1Ω | 0Ω | †3.1KΩ | †3.1KΩ | 120Ω | | |
| V 7 | 12AU7 | 540KΩ | 8.1KΩ | 4.8KΩ | .1Ω | .1Ω | †3KΩ | 120KΩ | 150Ω | 0Ω |
| V 8 | 6AC7 | 0Ω | 0Ω | 280Ω | 1Meg | 430Ω | †2KΩ | .1Ω | †4.8KΩ | |
| V 9 | 6AU6 | 680KΩ | 0Ω | .1Ω | 0Ω | †10KΩ | †10KΩ | 0Ω | | |
| V 10 | 6AL5 | 10KΩ | 10KΩ | 0Ω | .1Ω | INF | 0Ω | INF | | |
| V 11 | 6AV6 | 10Meg | 0Ω | 0Ω | .1Ω | 0Ω | 0Ω | †200KΩ | | |
| V 12 | 6V6GT | INF | .1Ω | †2.5KΩ | †15KΩ | 1Meg | INF | 0Ω | 470Ω | |
| V 13 | 12AU7 | 15KΩ | 2.2Meg | 0Ω | .1Ω | .1Ω | 51KΩ | 0Ω | 270KΩ | 0Ω |
| V 14 | 6SN7GT | 2.2Meg | #2.1Meg | 0Ω | 51KΩ | †4.6KΩ | 5.8KΩ | .1Ω | 0Ω | |
| V 15 | 6S4 | INF | 2.3KΩ | 2.2Meg | .1Ω | 0Ω | 2.2Meg | INF | INF | #3.3KΩ |
| V 16 | 6AL5 | 4.8Meg | 4.8Meg | .1Ω | 0Ω | 12KΩ | 0Ω | 12KΩ | | |
| V 17 | 6SN7GT | 5.7 Meg. | #25KΩ | 1.2KΩ | 105KΩ | #135KΩ | 1.2KΩ | 0Ω | .1Ω | |
| V 18 | 6BQ6GT | INF | 0Ω | INF | †9KΩ | 470KΩ | INF | .1Ω | 300Ω | Top Cap #21Ω |
| V 19 | 6W4GT | INF | INF | 800KΩ | INF | †127Ω | INF | #24 | #24Ω | |
| V 20 | 1B3GT | PINS 1 - 8 HAVE INF RESISTANCE | | | | | | | | Top Cap #430Ω |
| V 21 | 5U4G | INF | 18KΩ | INF | 22Ω | #24KΩ | 23Ω | INF | 18KΩ | |
| V 22 | 17HP4A | 0Ω | 260KΩ | Pin 6 †2KΩ | Pin 10 #24KΩ | Pin 11 110KΩ | Pin 12 .1Ω | | | |

ALL CONTROLS SET FOR NORMAL OPERATION, NO SIGNAL APPLIED
LOCAL-DISTANCE SWITCH IN "LOCAL" POSITION
† MEASURED FROM PIN 8 OF V21
# MEASURED FROM PIN 3 OF V19

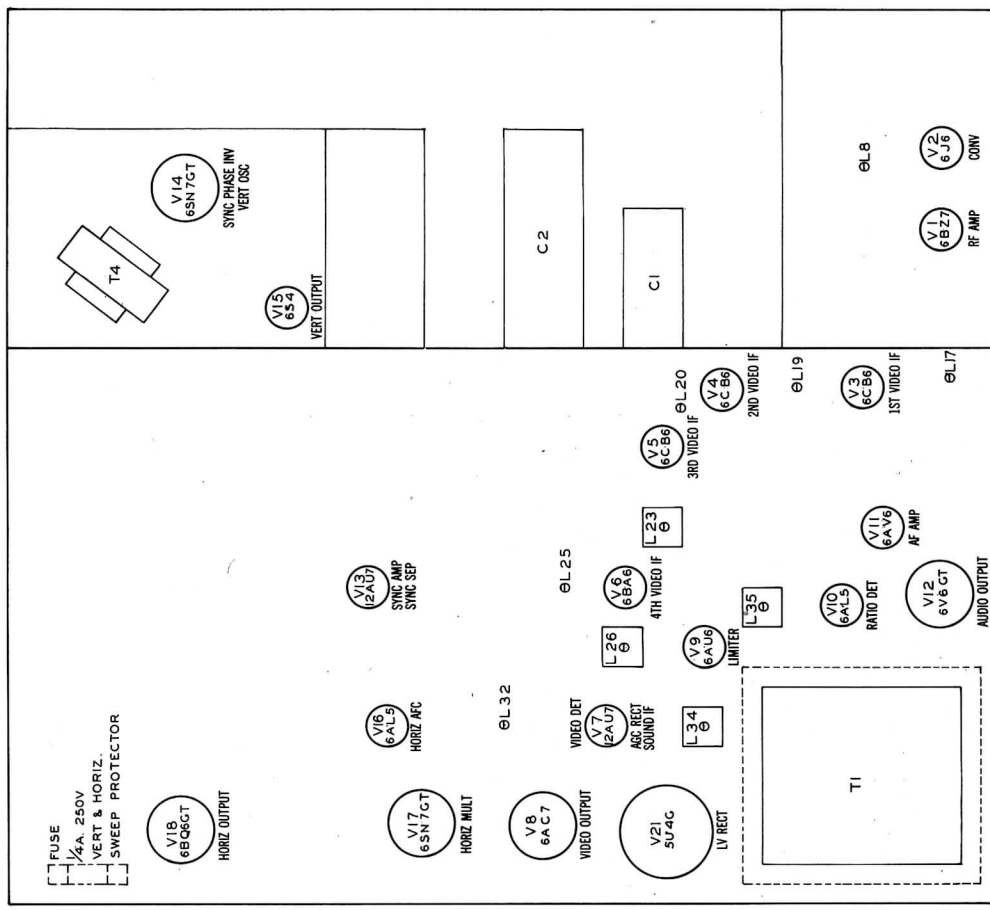


# TUBE PLACEMENT CHART

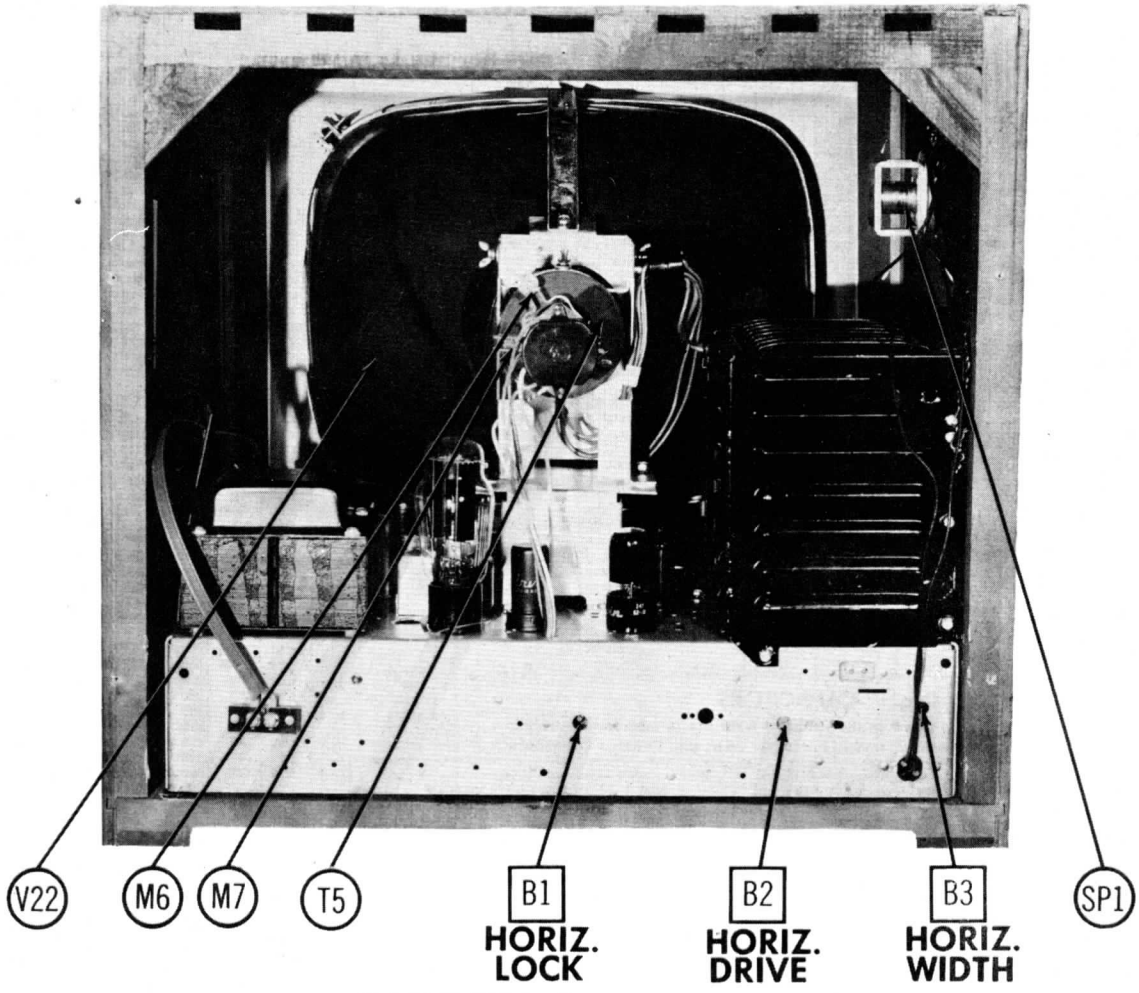


CABINET–REAR VIEW

## HORIZONTAL SWEEP CIRCUIT ADJUSTMENTS

Turn the set on and tune in a TV station, preferably a test pattern.

Set the horizontal hold control at the mid-point of its range and adjust the horizontal lock slug (B1) until the picture synchronizes horizontally.

Turn B1 clockwise until picture loses sync, then counter-clockwise until picture just falls into sync. Turn the horizontal hold control fully counter clockwise and momentarily switch to another channel and back again. The picture should be out of sync. Note the number of diagonal bars present in the picture. Repeat the procedure with the horizontal hold in extreme clockwise rotation and again note the number of diagonal bars. They should be the same for both positions of the horizontal hold. Adjust B1 for this condition.

Adjust the horizontal drive trimmer (B2) to the maximum counter clockwise position without the presence of a vertical white line or compression of the center of the picture. Adjust the width slug (B3) for picture slightly wider than necessary to fill the picture mask horizontally.

## DISASSEMBLY INSTRUCTIONS

1. Remove 4 push on type control knobs from front panel.
2. Remove 5 wood screws. Remove rear cover.
3. Disconnect speaker. Remove 4 speaker screws. Remove speaker.
4. Remove 6 chassis bolts. Remove chassis.

Note: FOR PICTURE REMOVAL IT IS NECFSSARY TO REMOVE CHASSIS AS OUTLINED ABOVE.

## TUBES (SYLVANIA or Equivalent)

| ITEM No. | USE | REPLACEMENT DATA: ARVIN PART No. | REPLACEMENT DATA: STANDARD REPLACEMENT | RMA BASE TYPE | NOTES |
|---|---|---|---|---|---|
| V1A | RF Amplifier | 6BZ7 | 6BZ7 | | |
| B | RF Amplifier | 6BQ7 | 6BQ7 | 9AJ | |
| V2 | Converter | 6J6 | 6J6 | 7BF | |
| V3 | 1st. Video IF Amp. | 6CB6 | 6CB6 | 7CM | |
| V4 | 2nd. Video IF Amp. | 6CB6 | 6CB6 | 7CM | |
| V5 | 3rd. Video IF Amp. | 6CB6 | 6CB6 | 7CM | |
| V6 | 4th. Video IF Amp. | 6BA6 | 6BA6 | 7BK | |
| V7 | Video Detector-AGC Rectifier-Sound IF Amp. | 12AU7 | 12AU7 | 9A | |
| V8 | Video Output | 6AC7 | 6AC7 | 8N | |
| V9 | Limiter | 6AU6 | 6AU6 | 7BK | |
| V10 | Ratio Detector | 6AL5 | 6AL5 | 6BT | |
| V11 | AF Amplifier | 6AV6 | 6AV6 | 7BT | |
| V12 | Audio Output | 6V6GT | 6V6GT | 7AC | |
| V13 | Sync Amplifier-Sync Separator | 12AU7 | 12AU7 | 9A | |
| V14 | Sync Phase Inv.-Vert. Oscillator | 6SN7GT | 6SN7GT | 8BD | |
| V15 | Vert. Output | 6S4 | 6S4 | 9AC | |
| V16 | Horiz. AFC | 6AL5 | 6AL5 | 6BT | |
| V17 | Horiz. Mult. | 6SN7GT | 6SN7GT | 8BD | |
| V18 | Horiz. Output | 6BQ6GT | 6BQ6GT | 6AM | |
| V19 | Damper | 6W4GT | 6W4GT | 4CG | |
| V20 | HV Rectifier | 1B3GT | 1B3GT | 3C | |
| V21 | LV Rectifier | 5U4G | 5U4GT | 5T | |

## CATHODE-RAY TUBE

| ITEM No. | REPLACEMENT DATA: ARVIN PART No. | SYLVANIA PART No. | | RTMA BASE TYPE | NOTES |
|---|---|---|---|---|---|
| V22A | 17HP4A | | | 12C | |
| B | 17RP4 | | | 12C | |

## CAPACITORS

**Capacity values given in the rating column are in mfd. for Electrolytic and Paper Capacitors, and in mmfd. for Mica and Ceramic Capacitors.**

| ITEM No. | RATING: CAP. | RATING: VOLT | REPLACEMENT DATA: ARVIN PART No. | AEROVOX PART No. | CENTRALAB PART No. | CORNELL-DUBILIER PART No. | ERIE PART No. | MALLORY PART No. | SPRAGUE PART No. | NOTES |
|---|---|---|---|---|---|---|---|---|---|---|
| C1A | ■60 | 400 | E22422-13 | AFH4-88 | | | | FP431.4 | TVL-4709 | |
| B | ▲50 | 350 | | PRS450/40 | | | | | | |
| C | ▲5 | 450 | | | | | | | | |
| D | 20 | 25 | | | | | | | | |
| C2A | ■80 | 350 | E22422-14 | AFH3-182 | | | | FP420.6 | TVL-3722 | |
| B | ▲50 | 350 | | PRS450/20 | | | | TC75 | TVA-1613 | |
| C | 100 | 50 | | | | | | | | |
| D | ▲20 | 450 | | | | | | | | |
| C3 | 20 | 450 | A25452 | PRS450/20 | | BR2045A | | TC75 | TVA-1709 | |
| C4 | 100 | 25 | A25454 | PRS25/100 | | BRH251A | | TC2501 | TVA-1207 | |
| C5 | 4 | 150 | A25453 | PRS150/4 | | BR415 | | TC40 | TVA-1402 | |
| C6 | 4 | | | | | | | | | |
| C7 | 800 | | | BPD-0008 | DD-801 | TM5T8 | 801-001 | DC-521 | 5HK-D1 | |
| C8 | 7.5 | | | | | | | | | |
| C9 | 1.6 | | | | | | | | | |
| C10 | 800 | | | BPD-0008 | DD-801 | TM5T8 | 801-001 | DC-521 | 5HK-D1 | |
| C11 | 470 | | | | | | | | | |
| C12 | 100 | | | SI100 | D6-101 | TM5T1 | GP1K-101 | UC-531 | 5GA-T1 | |
| C13 | .2 | | | | | | | | | |
| C14 | .56 | | | | | | | | | |
| C15 | 1.6 | | | | | | | | | |
| C16 | 100 | | | SI100N750 | TCN-100 | | | NT-531 | 5TCU-T1 | |
| C17 | 470 | | | SI470 | D6-471 | TM5T5 | GP2K-471 | UC-5347 | 5GA-T47 | |
| C18 | 100 | | | SI100 | D6-101 | TM5T1 | GP1K-101 | UC-531 | 5GA-T1 | |
| C19 | .39 | | | | | | | | | |
| C20 | 1.5 | | | | | | N330K-1R5 | | | |
| C21 | 10 | | | SI10N750 | TCN-10 | | N750K-100 | NT-541 | 5TCU-Q1 | |
| C22 | 800 | | | BPD-0008 | DD-801 | TM5T8 | 801-001 | DC-521 | 5HK-D1 | |
| C23 | 15 | | | SI15 | D6-150 | | GP1K-150 | UC-5415 | 5GA-Q15 | |
| C24 | 240 | 500 | | 1469-00025 | | 5R5T25 | | MCB240 | | |
| C25 | 1000 | | A23078 | BPD-001 | DD-102 | TM5D1 | 801-001 | DC-521 | 5HK-D1 | |
| C26 | 5000 | | C21674 | BPD-005 | DD-502 | TM5D5 | 811-005 | DC-525 | 5HK-D5 | |
| C27 | 800 | | | BPD-0008 | DD-801 | TM5T8 | 801-001 | DC-521 | 5HK-D1 | |
| C28 | 800 | | | BPD-0008 | DD-801 | TM5T8 | 801-001 | DC-521 | 5HK-D1 | |
| C29 | 5000 | | C21674 | BPD-005 | DD-502 | TM5D5 | 811-005 | DC-525 | 5HK-D5 | |
| C30 | 36 | | | | | | N330K-360 | | | |
| C31 | 8.2 | | C20206-13 | SI8.2NP0 | | | NP0K-8R2 | | | |
| C32 | 1000 | | A23078 | BPD-001 | DD-102 | TM5D1 | 801-001 | DC-521 | 5HK-D1 | |
| C33 | 610 | | C20351-1 | | | | | | | |
| C34 | 1000 | | A23078 | BPD-001 | DD-102 | TM5D1 | 801-001 | DC-521 | 5HK-D1 | |
| C35 | 1000 | | A23078 | BPD-001 | DD-102 | TM5D1 | 801-001 | DC-521 | 5HK-D1 | |
| C36 | 47 | | | | | | N330L-470 | | | |
| C37 | 47 | | C20206-19 | | | | N220L-470 | | | |
| C38 | 1000 | | A23078 | BPD-001 | DD-102 | TM5D1 | 801-001 | DC-521 | 5HK-D1 | |
| C39 | 610 | | C20351-1 | | | | | | | |
| C40 | 1000 | | A23078 | BPD-001 | DD-102 | TM5D1 | 801-001 | DC-521 | 5HK-D1 | |
| C41 | 1000 | | A23078 | BPD-001 | DD-102 | TM5D1 | 801-001 | DC-521 | 5HK-D1 | |
| C42 | 39 | | | | | | N330K-390 | | | |
| C43 | 47 | | C20206-19 | | | | N220L-470 | | | |
| C44 | 1000 | | A23078 | BPD-001 | DD-102 | TM5D1 | 801-001 | DC-521 | 5HK-D1 | |
| C45 | 610 | | C20351-1 | | | | | | | |
| C46 | 1000 | | A23078 | BPD-001 | DD-102 | TM5D1 | 801-001 | DC-521 | 5HK-D1 | |
| C47 | 47 | | C20206-19 | | | | N220L-470 | | | |
| C48 | 2.2 | | C20205-7 | | | | N220K-2R2 | | | |
| C49 | 36 | | | | | | N330K-360 | | | |
| C50 | 610 | | C20351-1 | | | | | | | |
| C51 | 1000 | | A23078 | BPD-001 | DD-102 | TM5D1 | 801-001 | DC-521 | 5HK-D1 | |
| C52 | 1000 | | A23078 | BPD-001 | DD-102 | TM5D1 | 801-001 | DC-521 | 5HK-D1 | |
| C53 | 1000 | | A23078 | BPD-001 | DD-102 | TM5D1 | 801-001 | DC-521 | 5HK-D1 | |
| C54 | 68 | | D25530-13 | | | | N220L-680 | | | |

## CAPACITORS

| ITEM No. | RATING: CAP. | RATING: VOLT | REPLACEMENT DATA: ARVIN PART No. | AEROVOX PART No. | CENTRALAB PART No. | CORNELL-DUBILIER PART No. |
|---|---|---|---|---|---|---|
| C55 | 5000 | | C21674 | BPD-005 | DD-502 | TM5 |
| C56 | 1000 | | A23078 | BPD-001 | DD-102 | TM5 |
| C57 | 8.2 | | C20206-13 | SI8.2NP0 | | |
| C58 | 68 | | D25530-13 | | | |
| C59 | 1000 | | A23078 | BPD-001 | DD-102 | TM5 |
| C60 | .22 | 200 | D25455-224 | P488-22 | | PTE |
| C61 | 1000 | | A23078 | BPD-001 | DD-102 | TM5 |
| C62 | .22 | 200 | D25455-224 | P488-22 | | PTE |
| C63 | .1 | 400 | D25455-104 | P488-1 | DF-104 | PTE |
| C64 | .1 | 200 | D25455-104 | P288-1 | DF-104 | PJ2 |
| C65 | 1000 | | A23078 | BPD-001 | DD-102 | TM5 |
| C66 | 47 | | | SI47NP0 | TCZ-47 | |
| C67 | .1 | 400 | D25462-104 | P488-1 | DF-104 | PTE |
| C68 | .047 | 400 | D25462-473 | P488-047 | DF-503 | PTE |
| C69 | 68 | | D25530-13 | | | |
| C70 | 5000 | | C21674 | BPD-005 | DD-502 | TM5 |
| C71 | 1000 | | A23078 | BPD-001 | DD-102 | TM5 |
| C72 | 5000 | | C21674 | BPD-005 | DD-502 | TM5 |
| C73 | 500 | 500 | C20290-501 | 1468-0005 | D6-501 | 5W5 |
| C74 | .0033 | 600 | D25461-332 | P688-0033 | D6-332 | PTE |
| C75 | .047 | 200 | D25455-473 | P288-047 | DF-503 | PTE |
| C76 | .0047 | 600 | D25461-472 | P688-0047 | D6-472 | PTE |
| C77 | 47 | 500 | C20411-470 | 1468-00005 | D6-470 | 5W5 |
| C78 | .1 | 400 | D25462-104 | P488-1 | DF-104 | PTE |
| C79 | .01 | 400 | D25462-103 | P488-01 | D6-103 | PTE |
| C80 | .0047 | 600 | D25461-472 | P688-0047 | D6-472 | PTE |
| C81 | .22 | 400 | D25462-224 | P488-22 | | PTE |
| C82 | 270 | 500 | C20290-271 | 1469-0003 | | 5R5T |
| C83 | .047 | 400 | D25462-473 | P488-047 | DF-503 | PTE |
| C84 | .047 | 600 | D25461-473 | P688-047 | DF-503 | PTE |
| C85 | .47 | 200 | D25455-474 | P288-47 | | PJ2 |
| C86A | .0022 | | | P688-0022 | | PTE |
| B | .0047 | | ♦C24166 | P688-0047 | ♦PC-100 | PTE |
| C | .0047 | | | P688-0047 | | PTE |
| C87 | .0047 | 600 | C20374-472 | P688-0047 | | PTE |
| C88 | .0015 | 600 | D25461-152 | P688-0015 | D6-152 | PTE |
| C89 | .047 | 600 | D25461-473 | P688-047 | DF-503 | PTE |
| C90 | .1 | 600 | D2561-104 | P688-1 | DF-104 | PTE |
| C91 | .033 | 200 | D25455-333 | P488-033 | | PTE |
| C92 | .1 | 1000 | D25470-104 | P1088-1 | | PTE |
| C93 | .1 | 400 | D25462-104 | P488-1 | DF-104 | PTE |
| C94 | .047 | 600 | D25461-473 | P688-047 | DF-503 | PTE |
| C95 | .001 | 600 | D25461-102 | P688-001 | D6-102 | PTE |
| C96 | .001 | 600 | D25461-102 | P688-001 | D6-102 | PTE |
| C97 | .01 | 400 | D25462-223 | P488-01 | D6-103 | PTE |
| C98 | .0047 | 600 | D25461-472 | P688-0047 | D6-472 | PTE |
| C99 | .047 | 400 | D25462-473 | P488-047 | DF-503 | PTE |
| C100 | 3900 | 500 | C20374-392 | 1464-004 | | IDR5 |
| C101 | 100 | 500 | C20290-101 | 1469-0001 | | 5R5 |
| C102 | .22 | 600 | D25461-224 | 684-25 | | PTE |
| C103 | 330 | 500 | C20290-331 | 1469-00035 | | |
| C104 | 330 | 500 | C20290-331 | 1469-00035 | | |
| C105 | 270 | 500 | C20290-271 | 1469-0003 | | 5R5 |
| C106 | .1 | 600 | D25461-104 | P688-1 | DF-104 | PTE |
| C107 | .47 | 200 | D25455-472 | P288-47 | | PJ2 |
| C108 | .1 | 400 | D25462-104 | P488-1 | DF-104 | PTE |
| C109 | .047 | 600 | D25461-473 | P688-047 | | PTE |
| C110 | 500 | 20000 | A24994 | HV20C | TV3-502 | MM- |
| C111 | .01 | 600 | C20358-103 | 689ZGXY-01 | | PJ6 |
| C112 | .01 | 600 | C20358-103 | 689ZGXY-01 | | PJ6 |
| C113 | 1000 | | A23078 | BPD-001 | DD-102 | TM5 |

Note 1. Some Models use .01MFD in this application (Part #D25461-103)
♦ Items C86A, C86B, C86C, R80A, R80B, R80C are combined in one u
Note 2. Not used in all models.

## CONTROLS

| ITEM No. | RATING: RESISTANCE | RATING: WATTS | REPLACEMENT DATA: ARVIN PART No. | IRC PART No. | CLAROSTAT PART No. |
|---|---|---|---|---|---|
| R1A | 100KΩ | 1/2 | E22464-34 | Q11-128 | AG-49-S |
| B | Shaft | | Not Req. | Not Req. | KSS-3 |
| R2A | 1.5Meg | 1/2 | E22464-36 | Q11-138 | AG-83-S |
| B | Shaft | | Not Req. | Not Req. | KSS-3 |
| R3A | 25KΩ | 1/2 | E22464-38 | Q11-120 | AG-40-S |
| B | Shaft | | Not Req. | Not Req. | KSS-3 |
| R4A | 3000Ω | 2 | E22464-20 | QJ-71 * | RTV-259 |
| B | 2.5Meg | 1/2 | | | |
| R5A | 1500Ω | 1/2 | E22464-27 | ** | RTV-352 |
| B | 250KΩ | 1/2 | | | |
| C | Switch | | | | |

* CONCENTRIKIT EQUIVALENT-KIT K-3, BASE ELEMENTS & SHA
B11-239 & R2-124 (Rear)
** CONCENTRIKIT EQUIVALENT -KIT K-2, BASE ELEMENTS & SHA
B13-130 & R1-220 (Rear) & SWITC

## RESISTORS

| ITEM No. | RATING: OHMS | RATING: WATT | REPLACEMENT DATA: ARVIN PART No. | IRC PART No. | NOTES |
|---|---|---|---|---|---|
| R6 | 1Meg | 1/2 | | | |
| R7 | 750KΩ-5% | 1/2 | | BTS-750K -5% | |
| R8 | 470Ω | 1/2 | | BTS-470 | |
| R9 | 10KΩ | 1/2 | | BTS-10K | |
| R10 | 220KΩ | 1/2 | | BTS-220K | |
| R11 | 8200Ω | 1/2 | | | |
| R12 | 15KΩ | 1/2 | | BTS-15K | |
| R13 | 8200Ω | 1/2 | | BTS-8200 | |
| R14 | 4700Ω | 1/2 | | BTS-4700 | |
| R15 | 3300Ω | 1/2 | | BTS-3300 | |
| R16 | 1000Ω | 1/2 | | BTS-1000 | |
| R17 | 470Ω | 1/2 | | BTS-470 | |
| R18 | 15KΩ | 1/2 | C22381-153 | | |

| ITEM No. |
|---|
| R19 |
| R20 |
| R21 |
| R22 |
| R23 |
| R24 |
| R25 |
| R26 |
| R27 |
| R28 |
| R29 |
| R30 |
| R31 |

# PARTS LIST AND DESCRIPTIONS

## CAPACITORS (CONT.)

| ITEM No. | RATING CAP. | RATING VOLT | REPLACEMENT DATA ARVIN PART No. | AEROVOX PART No. | CENTRALAB PART No. | CORNELL-DUBILIER PART No. | ERIE PART No. | MALLORY PART No. | SPRAGUE PART No. | NOTES |
|---|---|---|---|---|---|---|---|---|---|---|
| C55 | 5000 | | C21674 | BPD-005 | DD-502 | TM5D5 | 811-005 | DC-525 | 5HK-D5 | |
| C56 | 1000 | | A23078 | BPD-001 | DD-102 | TM5D1 | 801-001 | DC-521 | 5HK-D1 | |
| C57 | 8.2 | | C20206-13 | SI8.2NP0 | | | NP0K-8R2 | | | |
| C58 | 68 | | D25530-13 | | | | N220L-680 | | | |
| C59 | 1000 | | A23078 | BPD-001 | DD-102 | TM5D1 | 801-001 | DC-521 | 5HK-D1 | |
| C60 | .22 | 200 | D25455-224 | P488-22 | | PTE4P22 | | PT4025 | 2TM-P22 | |
| C61 | 1000 | | A23078 | BPD-001 | DD-102 | TM5D1 | 801-001 | DC-521 | 5HK-D1 | |
| C62 | .22 | 200 | D25455-224 | P488-22 | | PTE4P22 | | PT4025 | 2TM-P22 | |
| C63 | .1 | 400 | D25455-104 | P488-1 | DF-104 | PTE4P1 | | PT401 | 4TM-P1 | |
| C64 | .1 | 200 | D25455-104 | P288-1 | DF-104 | PJ2P1 | | PT401 | 2TM-P1 | |
| C65 | 1000 | | A23078 | BPD-001 | DD-102 | TM5D1 | 801-001 | DC-521 | 5HK-D1 | |
| C66 | 47 | | | SI47NP0 | TCZ-47 | | NP0K-470 | ZT-5447 | 5TCC-Q47 | |
| C67 | .1 | 400 | D25462-104 | P488-1 | DF-104 | PTE4P1 | | PT401 | 4TM-P1 | |
| C68 | .047 | 400 | D25462-473 | P488-047 | DF-503 | PTE4147 | | PT4147 | 4TM-S47 | |
| C69 | 68 | | D25530-13 | | | | N220L-680 | | | |
| C70 | 5000 | | C21674 | BPD-005 | DD-502 | TM5D5 | 811-005 | DC-525 | 5HK-D5 | |
| C71 | 1000 | | A23078 | BPD-001 | DD-102 | TM5D1 | 801-001 | DC-521 | 5HK-D1 | |
| C72 | 5000 | | C21674 | BPD-005 | DD-502 | TM5D5 | 811-005 | DC-525 | 5HK-D5 | |
| C73 | 500 | 500 | C20290-501 | 1468-0005 | D6-501 | 5W5T5 | GP2K-501 | | 1FM-35 | |
| C74 | .0033 | 600 | D25461-332 | P688-0033 | D6-332 | PTE6D33 | GP2-333-332 | PT623 | 6TM-D3 | |
| C75 | .047 | 200 | D25455-473 | P288-047 | DF-503 | PTE4S47 | | PT4147 | 2TM-S47 | |
| C76 | .0047 | 600 | D25461-472 | P688-0047 | D6-472 | PTE6D47 | GP2-333-472 | PT6247 | 6TM-D47 | |
| C77 | 47 | 500 | C20411-470 | 1468-00005 | D6-470 | 5W5Q5 | GP1K-470 | MC225 | 1FM-45 | |
| C78 | .1 | 400 | D25462-104 | P488-1 | DF-104 | PTE4P1 | | PT401 | 4TM-P1 | |
| C79 | .01 | 400 | D25462-103 | P488-01 | D6-103 | PTE4S1 | GP2-333-103 | PT411 | 4TM-S1 | |
| C80 | .0047 | 600 | D25461-472 | P688-0047 | D6-472 | PTE6D47 | GP2-333-472 | PT6247 | 6TM-D47 | |
| C81 | .22 | 400 | D25462-224 | P488-22 | | PTE4P22 | | PT4025 | 4TM-P22 | |
| C82 | 270 | 500 | C20290-271 | 1469-0003 | | 5R5T3 | | MCB241 | MS-33 | |
| C83 | .047 | 400 | D25462-473 | P488-047 | DF-503 | PTE4S47 | | PT4147 | 4TM-S47 | |
| C84 | .047 | 600 | D25461-473 | P688-047 | DF-503 | PTE6S47 | | PT4147 | 6TM-S47 | |
| C85 | .47 | 200 | D25455-474 | P288-47 | | PJ2P5 | | PT405 | 2TM-P47 | |
| C86A | .0022 | | | P688-0022 | | PTE6D22 | | PT6222 | | |
| B | .0047 | | ♦C24166 | P688-0047 | ♦PC-100 | PTE6D47 | ♦1405-01 | PT6247 | ♦101C1 | |
| C | .0047 | | | P688-0047 | | PTE6D47 | | PT6247 | | |
| C87 | .0047 | 600 | C20374-472 | P688-0047 | | PTE6D47 | | PT6247 | 6TM-D47 | |
| C88 | .0015 | 600 | D25461-152 | P688-0015 | D6-152 | PTE6D15 | GP2L-152 | UC-5215 | 5HK-D15 | |
| C89 | .047 | 600 | D25461-473 | P688-047 | DF-503 | PTE6S47 | | PT6147 | 6TM-S47 | |
| C90 | .1 | 600 | D2561-104 | P688-1 | DF-104 | PTE6P1 | | PT601 | 6TM-P1 | |
| C91 | .033 | 200 | D25455-333 | P488-033 | | PTE6S3 | | PT4133 | 6TM-S3 | |
| C92 | .1 | 1000 | D25470-104 | P1088-1 | | PTE16P1 | | PT1601 | MB-P1 | |
| C93 | .1 | 400 | D25462-104 | P488-1 | DF-104 | PTE4P1 | | PT401 | 4TM-P1 | |
| C94 | .047 | 600 | D25461-473 | P688-047 | DF-503 | PTE6S47 | | PT6147 | 6TM-S47 | |
| C95 | .001 | 600 | D25461-102 | P688-001 | D6-102 | PTE6D1 | GP2L-102 | PT621 | 6TM-D1 | |
| C96 | .001 | 600 | D25461-102 | P688-001 | D6-102 | PTE6D1 | GP2L-102 | PT621 | 6TM-D1 | |
| C97 | .01 | 400 | D25462-223 | P488-01 | D6-103 | PTE4S1 | GP2-333-103 | PT411 | 4TM-S1 | |
| C98 | .0047 | 600 | D25461-472 | P688-0047 | D6-472 | PTE6D47 | GP2-333-472 | PT6247 | 6TM-D47 | Note 1 |
| C99 | .047 | 400 | D25462-473 | P488-047 | DF-503 | PTE4S47 | | PT4147 | 4TM-S47 | |
| C100 | 3900 | 500 | C20374-392 | 1464-004 | | IDR5D4 | | | | |
| C101 | 100 | 500 | C20290-101 | 1469-0001 | | 5R5T1 | | MCB235 | MS-31 | |
| C102 | .22 | 600 | D25461-224 | 684-25 | | PTE6P25 | | PT6025 | 6TM-P22 | |
| C103 | 330 | 500 | C20290-331 | 1469-00035 | | | | | | |
| C104 | 330 | 500 | C20290-331 | 1469-00035 | | | | | | |
| C105 | 270 | 500 | C20290-271 | 1469-0003 | | 5R5T3 | | MCB241 | MS-33 | |
| C106 | .1 | 600 | D25461-104 | P688-1 | DF-104 | PTE6P1 | | PT601 | 6TM-P1 | |
| C107 | .47 | 200 | D25455-472 | P288-47 | | PJ2P5 | | PT405 | 2TM-P47 | |
| C108 | .1 | 400 | D25462-104 | P488-1 | DF-104 | PTE4P1 | | PT401 | 4TM-P1 | |
| C109 | .047 | 600 | D25461-473 | P688-047 | | PTE6S47 | | PT6147 | 6TM-S47 | |
| C110 | 500 | 20000 | A24994 | HV20C | TV3-502 | MM-C20T5 | 413-501 | | 20DK-T5 | |
| C111 | .01 | 600 | C20358-103 | 689ZGXY-01 | | PJ6S1 | | PT611 | 6TM-S1 | |
| C112 | .01 | 600 | C20358-103 | 689ZGXY-01 | | PJ6S1 | | PT611 | 6TM-S1 | |
| C113 | 1000 | | A23078 | BPD-001 | DD-102 | TM5D1 | 801-001 | DC-521 | 5HK-D1 | Note 2 |

Note 1. Some Models use .01MFD in this application (Part #D25161-103)
♦ Items C86A, C86B, C86C, R80A, R80B, R80C are combined in one unit.
Note 2. Not used in all models.

## CONTROLS

| ITEM No. | RATING RESISTANCE | RATING WATTS | REPLACEMENT DATA ARVIN PART No. | IRC PART No. | CLAROSTAT PART No. | CENTRALAB PART No. | MALLORY PART No. | INSTALLATION NOTES |
|---|---|---|---|---|---|---|---|---|
| R1A | 100KΩ | ½ | E22464-34 | Q11-128 | AG-49-S | AB-40 | U-41 | Brightness |
| B | Shaft | | Not Req. | Not Req. | KSS-3 | AK-4 | Not Req. | Attach to R1A |
| R2A | 1.5Meg | ½ | E22464-36 | Q11-138 | AG-83-S | AB-75 | U-155 | Vert hold |
| B | Shaft | | Not Req. | Not Req. | KSS-3 | AK-4 | Not Req. | Attach to R2A |
| R3A | 25KΩ | ½ | E22464-38 | Q11-120 | AG-40-S | AB-26 | U-29 | Horiz. hold |
| B | Shaft | | Not Req. | Not Req. | KSS-3 | AK-4 | Not Req. | Attach to R3A |
| R4A | 3000Ω | 2 | E22464-20 | QJ-71 * | RTV-259 | | | Vert linearity-Wire wound Panel |
| B | 2.5Meg | ½ | | | | | | Height-rear |
| R5A | 1500Ω | ½ | E22464-27 | ** | RTV-352 | | UF152R | Contrast-Panel |
| B | 250KΩ | ½ | | | | | UR254A | Volume-rear |
| C | Switch | | | | | | US-26 | Attach to R5B |

* CONCENTRIKIT EQUIVALENT-KIT K-3, BASE ELEMENTS & SHAFTS W11-112 & P3-114 (Panel) B11-239 & R2-124 (Rear)
** CONCENTRIKIT EQUIVALENT -KIT K-2, BASE ELEMENTS & SHAFTS B17-110 & P1-204 (Panel) B13-130 & R1-220 (Rear) & SWITCH 76-1.

## RESISTORS

| ITEM No. | RATING OHMS | RATING WATT | REPLACEMENT DATA ARVIN PART No. | IRC PART No. | NOTES |
|---|---|---|---|---|---|
| R6 | 1Meg | ½ | | | |
| R7 | 750KΩ-5% | ½ | | BTS-750K -5% | |
| R8 | 470Ω | ½ | | BTS-470 | |
| R9 | 10KΩ | ½ | | BTS-10K | |
| R10 | 220KΩ | ½ | | BTS-220K | |
| R11 | 8200Ω | ½ | | | |
| R12 | 15KΩ | ½ | | BTS-15K | |
| R13 | 8200Ω | ½ | | BTS-8200 | |
| R14 | 4700Ω | ½ | | BTS-4700 | |
| R15 | 3300Ω | ½ | | BTS-3300 | |
| R16 | 1000Ω | ½ | | BTS-1000 | |
| R17 | 470Ω | ½ | | BTS-470 | |
| R18 | 15KΩ | ½ | C22381-153 | | |

| ITEM No. | RATING OHMS | RATING WATT | REPLACEMENT DATA ARVIN PART No. | IRC PART No. | NOTES |
|---|---|---|---|---|---|
| R19 | 47Ω | ½ | C22381-470 | | |
| R20 | 1000Ω | ½ | C20061-102 | BTS-1000 | |
| R21 | 3300Ω | ½ | C20061-332 | BTS-3300 | |
| R22 | 150Ω | ½ | C20061-151 | BTS-150 | |
| R23 | 18KΩ-5% | ½ | C22382-183 | | |
| R24 | 47Ω | ½ | C22381-470 | | |
| R25 | 1000Ω | ½ | C20061-102 | BTS-1000 | |
| R26 | 3300Ω | ½ | C20061-332 | BTS-3300 | |
| R27 | 150Ω | ½ | C20061-151 | BTS-150 | |
| R28 | 1000Ω | ½ | C20061-102 | BTS-1000 | |
| R29 | 47Ω | ½ | C22381-470 | | |
| R30 | 1000Ω | ½ | C20061-102 | BTS-1000 | |
| R31 | 22 KΩ | ½ | C22381-223 | BTS-22K | |

| ITEM No. | RATING OHMS | RATING WATT | REPLACEMEN ARVIN PART No. | |
|---|---|---|---|---|
| R32 | 120Ω | ½ | C22381-121 | B |
| R33 | 1000Ω | ½ | C20061-102 | B |
| R34 | 150Ω | ½ | C20061-151 | B |
| R35 | 220KΩ | ½ | C22381-224 | B |
| R36 | 560KΩ | ½ | C20061-564 | B |
| R37 | 220KΩ | ½ | C22381-224 | B |
| R38 | 560KΩ | ½ | C20061-564 | B |
| R39 | 100KΩ | ½ | C22381-104 | B |
| R40 | 220KΩ | ½ | C20061-224 | B |
| R41 | 4700Ω | ½ | C22381-472 | B |
| R42 | 100Ω | ½ | C22381-101 | B |
| R43 | 3300Ω-5% | ½ | C22382-332 | B |
| R44 | 1 Meg | ½ | C20061-105 | B |
| R45 | 150Ω | ½ | C22381-151 | B |
| R46 | 10KΩ | ½ | C20061-103 | |
| R47 | 4700Ω-5% | 2 | C25467-472 | |
| R48 | 220KΩ | ½ | C22381-224 | |
| R49 | 220KΩ | ½ | C22381-224 | |
| R50 | 220KΩ | ½ | C22381-224 | |
| R51 | 100KΩ | ½ | C22381-104 | |
| R52 | 4700Ω | 1 | C20070-472 | |
| R53 | 120KΩ | ½ | C22381-124 | |
| R54 | 150Ω | 1 | C20061-151 | |
| R55 | 1000Ω | ½ | C22381-102 | |
| R56 | 680KΩ | ½ | C20061-684 | |
| R57 | 12KΩ | 1 | C20070-123 | |
| R58 | 22KΩ | 1 | C20070-223 | |
| R59 | 390Ω-5% | ½ | C22382-391 | |
| R60 | 47KΩ | ½ | C22381-473 | |
| R61 | 10KΩ-5% | ½ | C22382-103 | |
| R62 | 10KΩ-5% | ½ | C22382-103 | |
| R63 | 10Meg | ½ | C20061-106 | |
| R64 | 150KΩ | ½ | C22381-154 | |
| R65 | 47KΩ | ½ | C22381-105 | |
| R66 | 1Meg | ½ | C20061-105 | |
| R67 | 470Ω | 1 | C20070-471 | |
| R68 | 2200Ω | 2 | C25228-222 | |
| R69 | 270KΩ | ½ | C20061-274 | |
| R70 | 2.2Meg | ½ | C22381-225 | |
| R71 | 47KΩ | 1 | C20070-473 | |
| R72 | 22KΩ | ½ | C22381-223 | |
| R73 | 270KΩ | ½ | C22381-274 | |
| R74 | 560KΩ | ½ | C22381-564 | |
| R75 | 1800Ω | ½ | C22381-182 | |
| R76 | 820Ω | ½ | C22381-821 | |

♦ Items R80A, R80B, R80C, C86A, C
Note 1. Some models use a 1500Ω resist
Note 2. Some models use a 470KΩ resis
Note 3. Some models use a 2200Ω resis
Note 4. Not used in all models.

| ITEM No. | RATING PRI. | RATING SEC. 1 | RATING SEC. 2 | S |
|---|---|---|---|---|
| T1 | 117VAC @2A | 650VCT .280ADC | 5VAC @ 3A | 6. @ SH 6. @ |

① Parallel the 6V. windings
② Drill new mtg. holes

**TR**

| ITEM No. | RATING DC RESISTANCE PRI. | RATING DC RESISTANCE SEC. | ARVIN PART N |
|---|---|---|---|
| T2 | 190Ω | 1050Ω | C22446-1 D22466-1 |
| T3 | 430.7Ω Tap @ 20.7Ω | 36.3Ω Tap @ 3.7Ω, 11.7Ω | E24989 |
| | | SEC 2 0Ω | |
| T4 | 1.5KΩ tap @ 4Ω | | C24990 |
| T5A | 24Ω | | D24807 |
| B | 46Ω | | |

① Alternate vert. osc. trans.
② Alter horiz. deflection coil net work
③ Drill one new mtg. hole.

**TR**

| ITEM No. | RATING IMPEDANCE PRI. | RATING IMPEDANCE SEC. | RATING DC RES. PRI. | RATING DC RES. SEC. | |
|---|---|---|---|---|---|
| T6 | 4.5KΩ | 3.4Ω | 300Ω | .4Ω | C- |

| ITEM No. | RATINGS SIZE | RATINGS FIELD | RATINGS V. C. IMP. | |
|---|---|---|---|---|
| SP1 | 6" | PM | 3.4Ω | D2 AI AI |

NOTES

NOTES

**Electrolytic Capacitors.**

| MALLORY PART No. | SPRAGUE PART No. | NOTES |
|---|---|---|
| P431.4 | TVL-4709 | |
| P420.6 | TVL-3722 | |
| C75 | TVA-1613 | |
| C75 | TVA-1709 | |
| C2501 | TVA-1207 | |
| C40 | TVA-1402 | |
| C-521 | 5HK-D1 | |
| C-521 | 5HK-D1 | |
| C-531 | 5GA-T1 | |
| T-531 | 5TCU-T1 | |
| C-5347 | 5GA-T47 | |
| C-531 | 5GA-T1 | |
| T-541 | 5TCU-Q1 | |
| C-521 | 5HK-D1 | |
| C-5415 | 5GA-Q15 | |
| MCB240 | | |
| C-521 | 5HK-D1 | |
| C-525 | 5HK-D5 | |
| C-521 | 5HK-D1 | |
| C-521 | 5HK-D1 | |
| C-525 | 5HK-D5 | |
| C-521 | 5HK-D1 | |
| C-521 | 5HK-D1 | |
| C-521 | 5HK-D1 | |
| C-521 | 5HK-D1 | |
| C-521 | 5HK-D1 | |
| DC-521 | 5HK-D1 | |
| DC-521 | 5HK-D1 | |
| DC-521 | 5HK-D1 | |

# DESCRIPTIONS

## S (CONT.)

| EMENT DATA | | | | |
|---|---|---|---|---|
| ORNELL-UBILIER ART No. | ERIE PART No. | MALLORY PART No. | SPRAGUE PART No. | NOTES |
| M5D5 | 811-005 | DC-525 | 5HK-D5 | |
| M5D1 | 801-001 | DC-521 | 5HK-D1 | |
| | NP0K-8R2 | | | |
| | N220L-680 | | | |
| M5D1 | 801-001 | DC-521 | 5HK-D1 | |
| TE4P22 | | PT4025 | 2TM-P22 | |
| M5D1 | 801-001 | DC-521 | 5HK-D1 | |
| TE4P22 | | PT4025 | 2TM-P22 | |
| TE4P1 | | PT401 | 4TM-P1 | |
| J2P1 | | PT401 | 2TM-P1 | |
| M5D1 | 801-001 | DC-521 | 5HK-D1 | |
| | NP0K-470 | ZT-5447 | 5TCC-Q47 | |
| TE4P1 | | PT401 | 4TM-P1 | |
| TE4147 | | PT4147 | 4TM-S47 | |
| | N220L-680 | | | |
| M5D5 | 811-005 | DC-525 | 5HK-D5 | |
| M5D1 | 801-001 | DC-521 | 5HK-D1 | |
| M5D5 | 811-005 | DC-525 | 5HK-D5 | |
| V5T5 | GP2K-501 | | 1FM-35 | |
| TE6D33 | GP2-333-332 | PT623 | 6TM-D3 | |
| TE4S47 | | PT4147 | 2TM-S47 | |
| TE6D47 | GP2-333-472 | PT6247 | 6TM-D47 | |
| V5Q5 | GP1K-470 | MC225 | 1F M-45 | |
| TE4P1 | | PT401 | 4TM-P1 | |
| TE4S1 | GP2-333-103 | PT411 | 4TM-S1 | |
| TE6D47 | GP2-333-472 | PT6247 | 6TM-D47 | |
| TE4P22 | | PT4025 | 4TM-P22 | |
| 5T3 | | MCB241 | MS-33 | |
| TE4S47 | | PT4147 | 4TM-S47 | |
| TE6S47 | | PT4147 | 6TM-S47 | |
| T2P5 | | PT405 | 2TM-P47 | |
| TE6D22 | | PT6222 | | |
| TE6D47 | ♦1405-01 | PT6247 | ♦101C1 | |
| TE6D47 | | PT6247 | | |
| TE6D47 | | PT6247 | 6TM-D47 | |
| TE6D15 | GP2L-152 | UC-5215 | 5HK-D15 | |
| TE6S47 | | PT6147 | 6TM-S47 | |
| TE6P1 | | PT601 | 6TM-P1 | |
| TE6S3 | | PT4133 | 6TM-S3 | |
| TE16P1 | | PT1601 | MB-P1 | |
| TE4P1 | | PT401 | 4TM-P1 | |
| TE6S47 | | PT6147 | 6TM-S47 | |
| TE6D1 | GP2L-102 | PT621 | 6TM-D1 | |
| TE6D1 | GP2L-102 | PT621 | 6TM-D1 | |
| TE4S1 | GP2-333-103 | PT411 | 4TM-S1 | |
| TE6D47 | GP2-333-472 | PT6247 | 6TM-D47 | Note 1 |
| TE4S47 | | PT4147 | 4TM-S47 | |
| R5D4 | | | | |
| R5T1 | | MCB235 | MS-31 | |
| TE6P25 | | PT6025 | 6TM-P22 | |
| R5T3 | | MCB241 | MS-33 | |
| TE6P1 | | PT601 | 6TM-P1 | |
| T2P5 | | PT405 | 2TM-P47 | |
| TE4P1 | | PT401 | 4TM-P1 | |
| TE6S47 | | PT6147 | 6TM-S47 | |
| M-C20T5 | 413-501 | | 20DK-T5 | |
| T6S1 | | PT611 | 6TM-S1 | |
| T6S1 | | PT611 | 6TM-S1 | |
| M5D1 | 801-001 | DC-521 | 5HK-D1 | Note 2 |

93)
e unit.

## LS

| CENTRALAB PART No. | MALLORY PART No. | INSTALLATION NOTES |
|---|---|---|
| AB-40 | U-41 | Brightness |
| AK-4 | Not Req. | Attach to R1A |
| AB-75 | U-155 | Vert hold |
| AK-4 | Not Req. | Attach to R2A |
| AB-26 | U-29 | Horiz. hold |
| AK-4 | Not Req. | Attach to R3A |
| | | Vert linearity-Wire wound Panel |
| | | Height-rear |
| | UF152R | Contrast-Panel |
| | UR254A | Volume-rear |
| | US-26 | Attach to R5B |

HAFTS W11-112 & P3-114 (Panel)

HAFTS B17-110 & P1-204 (Panel)
TCH 76-1.

## S

| M | RATING | | REPLACEMENT DATA | | NOTES |
|---|---|---|---|---|---|
| | OHMS | WATT | ARVIN PART No. | IRC PART No. | |
| | 47Ω | ½ | C22381-470 | | |
| | 1000Ω | ½ | C20061-102 | BTS-1000 | |
| | 3300Ω | ½ | C20061-332 | BTS-3300 | |
| | 150Ω | ½ | C20061-151 | BTS-150 | |
| | 18KΩ-5% | ½ | C22382-183 | | |
| | 47Ω | ½ | C22381-470 | | |
| | 1000Ω | ½ | C20061-102 | BTS-1000 | |
| | 3300Ω | ½ | C20061-332 | BTS-3300 | |
| | 150Ω | ½ | C20061-151 | BTS-150 | |
| | 1000Ω | ½ | C20061-102 | BTS-1000 | |
| | 47Ω | ½ | C22381-470 | | |
| | 1000Ω | ½ | C20061-102 | BTS-1000 | |
| | 22 KΩ | ½ | C22381-223 | BTS-22K | |

## RESISTORS (CONT.)

| ITEM No. | RATING | | REPLACEMENT DATA | | NOTES |
|---|---|---|---|---|---|
| | OHMS | WATT | ARVIN PART No. | IRC PART No. | |
| R32 | 120Ω | ½ | C22381-121 | BTS-120 | |
| R33 | 1000Ω | ½ | C20061-102 | BTS-1000 | |
| R34 | 150Ω | ½ | C20061-151 | BTS-150 | |
| R35 | 220KΩ | ½ | C22381-224 | BTS-220K | |
| R36 | 560KΩ | ½ | C20061-564 | BTS-560K | |
| R37 | 220KΩ | ½ | C22381-224 | BTS-220K | |
| R38 | 560KΩ | ½ | C20061-564 | BTS-560K | |
| R39 | 100KΩ | ½ | C22381-104 | BTS-100K | |
| R40 | 220KΩ | ½ | C20061-224 | BTS-220K | |
| R41 | 4700Ω | ½ | C22381-472 | BTS-4700 | |
| R42 | 100Ω | ½ | C22381-101 | BTS-100 | |
| R43 | 3300Ω-5% | ½ | C22382-332 | BTS-3300-5% | |
| R44 | 1 Meg | ½ | C20061-105 | BTS-1Meg | |
| R45 | 150Ω | ½ | C22381-151 | BTS-150 | |
| R46 | 10KΩ | ½ | C20061-103 | BTS-10K | |
| R47 | 4700Ω-5% | 2 | C25467-472 | BTB-4700-5% | |
| R48 | 220KΩ | ½ | C22381-224 | BTS-220K | |
| R49 | 220KΩ | ½ | C22381-224 | BTS-220K | |
| R50 | 220KΩ | ½ | C22381-224 | BTS-220K | |
| R51 | 100KΩ | ½ | C22381-104 | BTS-100K | |
| R52 | 4700Ω | 1 | C20070-472 | BTA-4700 | |
| R53 | 120KΩ | ½ | C22381-124 | | |
| R54 | 150Ω | ½ | C20061-151 | BTS-150 | |
| R55 | 1000Ω | ½ | C22381-102 | BTS-1000 | |
| R56 | 680KΩ | ½ | C20061-684 | BTS-680K | |
| R57 | 12KΩ | 1 | C20070-123 | BTA-12K | |
| R58 | 22KΩ | 1 | C20070-223 | BTA-22K | |
| R59 | 390Ω-5% | ½ | C22382-391 | BTS-390-5% | |
| R60 | 47KΩ | ½ | C22381-473 | BTS-47K | |
| R61 | 10KΩ-5% | ½ | C22382-103 | BTS-10K-5% | |
| R62 | 10KΩ-5% | ½ | C22382-103 | BTS-10K-5% | |
| R63 | 10Meg | ½ | C20061-106 | BTS-10Meg | |
| R64 | 150KΩ | ½ | C22381-154 | BTS-150K | |
| R65 | 47KΩ | ½ | C22381-105 | BTS-47K | |
| R66 | 1Meg | ½ | C20061-105 | BTS-1Meg | |
| R67 | 470Ω | 1 | C20070-471 | BTA-470 | |
| R68 | 2200Ω | 2 | C25228-222 | BTB-2200 | |
| R69 | 270KΩ | ½ | C20061-274 | BTS-270K | |
| R70 | 2.2Meg | ½ | C22381-225 | BTS-2.2Meg | |
| R71 | 47KΩ | 1 | C20070-473 | BTA-47K | |
| R72 | 22KΩ | ½ | C22381-223 | BTS-22K | |
| R73 | 270KΩ | ½ | C22381-274 | BTS-270K | |
| R74 | 560KΩ | ½ | C22381-564 | BTS-560K | |
| R75 | 1800Ω | ½ | C22381-182 | BTS-1800 | Note 1 |
| R76 | 820Ω | ½ | C22381-821 | BTS-820 | Note 1 |

| ITEM No. | RATING | | REPLACEMENT DATA | | NOTES |
|---|---|---|---|---|---|
| | OHMS | WATT | ARVIN PART No. | IRC PART No. | |
| R77 | 47KΩ | ½ | C22381-473 | BTS-47K | |
| R78 | 1100Ω-5% | ½ | C22382-112 | BTS-1100-5% | |
| R79 | 4700Ω | ½ | C22381-472 | BTS-4700 | |
| R80 A | 22KΩ | ½ | | BTS-22K | |
| B | 8200Ω | ½ | ♦C24166 | BTS-8200 | |
| C | 8200Ω | ½ | | BTS-8200 | |
| R81 | 22KΩ | ½ | C22381-223 | BTS-22K | |
| R82 | 100KΩ | ½ | C22381-104 | BTS-100K | |
| R83 | 10Meg | ½ | C22381-106 | BTS-10Meg | |
| R84 | 1.5Meg-5% | ½ | C22382-155 | BTS-1.5Meg 5% | |
| R85 | 470KΩ | ½ | C22381-474 | BTS-470K | |
| R86 | 1Meg-5% | ½ | C22382-105 | BTS-1Meg-5% | |
| R87 | 10KΩ | ½ | C22381-103 | BTS-10K | |
| R88 | 2.2Meg | ½ | C22381-225 | BTS-2.2Meg | |
| R89 | 1500Ω | ½ | C20061-152 | BTS-1500 | |
| R90 | 8200Ω | ½ | C22381-822 | BTS-8200 | |
| R91 | 22KΩ | ½ | C22381-223 | BTS-22K | |
| R92 | 100KΩ-5% | ½ | C22382-104 | BTS-100K-5% | |
| R93 | 100KΩ-5% | ½ | C22382-104 | BTS-100K-5% | |
| R94 | 4.7Meg | ½ | C22381-275 | BTS-4.7Meg | |
| R95 | 1Meg | ½ | C20061-105 | BTS-1Meg | Note 2 |
| R96 | 12KΩ | 2 | C20302-123 | BTB-12K | |
| R97 | 1200Ω | ½ | C22381-122 | BTS-1200 | |
| R98 | 8200Ω | 1 | C20070-822 | BTA-8200 | |
| R99 | 91KΩ-5% | 1 | C22382-913 | BTA-91K-5% | |
| R100 | 120KΩ | ½ | C20061-124 | BTS-120K | |
| R101 | 8200Ω | ½ | C22381-822 | BTS-8200 | |
| R102 | 15KΩ | 1 | C20070-153 | BTA-15K | |
| R103 | 47Ω | ½ | C20061-470 | | |
| R104 | 470KΩ | ½ | C22381-474 | BTS-470K | |
| R105 | 300Ω | 5 | | 1 3/4A-300 | |
| R106 | 27KΩ | 2 | C20302-273 | BTB-27K | |
| R107 | 27KΩ | 2 | C20302-273 | BTB-27K | |
| R108 | 27KΩ | 2 | C20302-273 | BTB-27K | |
| R109 | 1800Ω | 2 | C20302-182 | BTB-1800 | |
| R110 | 3.9Ω | ½ | C20308-39 | | |
| R111 | 470KΩ | 1 | C20103-474 | | |
| R112 | 15KΩ | ½ | C22381-153 | BTS-15K | |
| R113 | 5000Ω | 10 | | 1 3/4A-5000 | Note 3 |
| R114 | 5000Ω | 10 | | 1 3/4A-5000 | Note 4 |
| R115 | 15KΩ | 2 | | BTB-15K | Note 4 |
| R116 | 220KΩ | ½ | C20061-224 | BTS-220K | |

♦ Items R80A, R80B, R80C, C86A, C86B, C86C are conbined in one unit.
Note 1. Some models use a 1500Ω resistor in this application.
Note 2. Some models use a 470KΩ resistor in this application.
Note 3. Some models use a 2200Ω resistor in this application.
Note 4. Not used in all models.

## TRANSFORMER (POWER)

| ITEM No. | RATING | | | | REPLACEMENT DATA | | | | |
|---|---|---|---|---|---|---|---|---|---|
| | PRI. | SEC. 1 | SEC. 2 | SEC. 3 | ARVIN PART No. | STANCOR PART No. | MERIT PART No. | CHICAGO PART No. | TRIAD PART No. |
| T1 | 117VAC ⓐ2A | 650VCT .280ADC | 5VAC ⓐ 3A | 6.3VAC ⓐ 8A<br>SEC 4<br>6.3VAC ⓐ 1.1A | E25433 | P-8166①② | P-3070 | TP-319 | R-39BC |

① Parallel the 6V. windings
② Drill new mtg. holes

## TRANSFORMER (SWEEP CIRCUITS)

| ITEM No. | RATING | | REPLACEMENT DATA | | | | | NOTES |
|---|---|---|---|---|---|---|---|---|
| | DC RESISTANCE | | ARVIN PART No. | STANCOR PART No. | MERIT PART No. | CHICAGO PART No. | TRIAD PART No. | |
| | PRI. | SEC. | | | | | | |
| T2 | 190Ω | 1050Ω | C22446-1<br>D22466-1 ① | A-8122 ③ | A-4003 | TBO-3 ③ | A-97Y | Vert. Osc. Trans. |
| T3 | 430.7Ω<br>Tap ⓐ<br>20.7Ω | 36.3Ω<br>Tap ⓐ<br>3.7Ω,<br>11.7Ω<br>SEC 2<br>0Ω | E24989 | | | | | Horiz. Output Trans. |
| T4 | 1.5KΩ<br>tap ⓐ 4Ω | | C24990 | A-8141 | A-3039 | | A-104X | Vert. Output Trans. |
| T5A | 24Ω | | D24807 | DY-9 | MDF-70 ② | TY-3 | Y-17 ② | Horiz. Deflection Coils |
| B | 46Ω | | | | | | | Vert. Deflection Coils |

① Alternate vert. osc. trans.
② Alter horiz. deflection coil network
③ Drill one new mtg. hole.

## TRANSFORMER (AUDIO OUTPUT)

| ITEM No. | RATING | | | | REPLACEMENT DATA | | | | | NOTES |
|---|---|---|---|---|---|---|---|---|---|---|
| | IMPEDANCE | | DC RES. | | ARVIN PART No. | STANCOR PART No. | MERIT PART No. | CHICAGO PART No. | TRIAD PART No. | |
| | PRI. | SEC. | PRI. | SEC. | | | | | | |
| T6 | 4.5KΩ | 3.4Ω | 300Ω | .4Ω | C-24776-1 | A-3849 | A-3019 | RO-9 ① | S-5X | ① Drill one new mtg. hole |

## SPEAKER

| ITEM No. | RATINGS | | | REPLACEMENT DATA | | | NOTES |
|---|---|---|---|---|---|---|---|
| | SIZE | FIELD | V. C. IMP. | ARVIN PART No. | JENSEN PART No. | QUAM PART No. | |
| SP1 | 6" | PM | 3.4Ω | D23405<br>AE25607-1 ①<br>AD23406-2 ② | ST-108<br>Mod. P6-X | 6A1 | ① Speaker for Model 6179TM<br>② Alternate spkr. for model 6175TM |

# PARTS LIST AND DESCRIPTIONS (Continued)

## FILTER CHOKE

| ITEM No. | RATINGS | | | REPLACEMENT DATA | | | | |
|---|---|---|---|---|---|---|---|---|
| | TOTAL DIRECT CURRENT | D.C. RESISTANCE | INDUCTANCE (0 CURRENT 1000 ∿) | ARVIN PART No. | STANCOR PART No. | MERIT PART No. | CHICAGO PART No. | TRIAD PART No. |
| L1 | .150A | 127Ω | 2.9 Hy. | C-23087-1 | C-2327 | C-2991 ① | TR-3300 ① | C-13X ① |

① Drill one new mtg. hole

## COILS (RF-IF)

| ITEM No. | USE | DC RES. | | REPLACEMENT DATA | | | NOTES |
|---|---|---|---|---|---|---|---|
| | | PRI. | SEC. | ARVIN PART No. | MERIT PART No. | IRC PART No. | |
| L2 | Ant. Trans. | 0Ω | 0Ω | | | | |
| L3 | Ant. Coil | 0Ω | | | | | Channel 13 |
| L4 | Ant. Coils | 0Ω | | | | | |
| L5 | RF Choke | 0Ω | | | | | |
| L6 | Fil. Choke | 0Ω | | A22456 | | | |
| L7 | RF Coil | 0Ω | | | | | Channel 13 |
| L8 | RF Coils | 0Ω | | | | | |
| L9 | Mixer Grid Coil | 0Ω | | | | | Channel 13 |
| L10 | Mixer Grid Coils | 0Ω | | | | | |
| L11 | RF Choke | 1.2Ω | | | | | |
| L12 | Osc. Coil | 0Ω | | | | | Channel 13 |
| L13 | Osc. Coil | 0Ω | | | | | |
| L14 | Fil. Choke | 0Ω | | A22456 | | | |
| L15 | Fil. Choke | .2 | | | | CL-1 | .56 Microhenry |
| L16 | Conv. Plate | 0Ω | | | | | |
| L17 | 1st. Video IF | 0Ω | | C25410 | | | Includes Trap |
| L18 | Fil. Choke | 0Ω | | A23095 | | | |
| L19 | 2nd. Video IF | 0Ω | | C25411 | | | Includes Trap |
| L20 | 3rd. Video IF | 0Ω | | C25412 | | | Includes Trap |
| L21 | Grid Choke | 1.8Ω | | E22500-19 | | | 20 Microhenries-wound on 18KΩ resistor |
| L22 | Fil. Choke | 0Ω | | A23095 | | | |
| L23 | 4th. Video IF | 0Ω | | C25413 | | | Includes Trap |
| L24 | Grid Choke | 1.8Ω | | E22500-19 | | | 20 Microhenries-wound on 18KΩ resistor |
| L25 | Cathode Trap | 0Ω | 0Ω | C25415 | | | |
| L26 | 5th. Video IF | 0Ω | | C25474 | | | Includes Trap |
| L27 | Cathode Choke | 1.8Ω | | D22500-8 | | | 20 Microhenries -wound on 12KΩ resitor |
| L28 | Series Peak. Coil | 21Ω | | D25468-6 | TV-180 | | 40 Microhenries |
| L29 | Series Peak. Coil | .2Ω | | A25916 | TV-189 | | 1.7Microhenries |
| L30 | Shunt Peak. Coil | 3.8Ω | | D25468-5 | TV-181 | | 100 Microhenries |
| L31 | Series Peak. Coil | 6.6Ω | | D25468-8 | TV-185* | | 250 Microhenries - wound on 16KΩ resistor |
| L32 | 4.5MC Trap | 1Ω | | C25609 | TV-151 | | |
| L33 | Shunt Peak Coil | 5.5Ω | | D25468-1 | TV-184 | | 185 Microhenries |
| L34 | Sound IF | 1.5Ω | | C25543 | | | Tertiary .9Ω |
| L35 | Ratio Detect. | 4.2Ω | .2ΩCT | T C23 | TV-110 | | |
| L36 | Horiz. Osc. | 60Ω | | C23449 | TV-163 | | |
| L37 | Width Coil | 12Ω | 20Ω | C24991 | | | |

*Parallel with 16KΩ resistor

## FUSES

| ITEM No. | TYPE | RATING | REPLACEMENT DATA | | | | | |
|---|---|---|---|---|---|---|---|---|
| | | | ARVIN PART No. | | LITTELFUSE PART No. | | BUSS PART No. | |
| | | | FUSE | HOLDER | FUSE | HOLDER | FUSE | HOLDER |
| M1 | 3AG (P/T) | 1/4A. 250V. | | | 318.250 | | GJV-1/4A. | |

## MISCELLANEOUS

| ITEM No. | PART NAME | ARVIN PART No. | NOTES |
|---|---|---|---|
| M2 | RF Tuner | E25702-1 | TT6-B |
| M3 | Switch | A25525 | Local-Distance |
| M4 | IF Trap | A25255 | |
| M5 | FM Trap | A25907 | |
| M6 | Centering Magnet | D25626 | |
| M7 | Ion Trap | C25662 | |
| B2 | Trimmer | A24528 | Horiz. Drive (40-370MMF) |

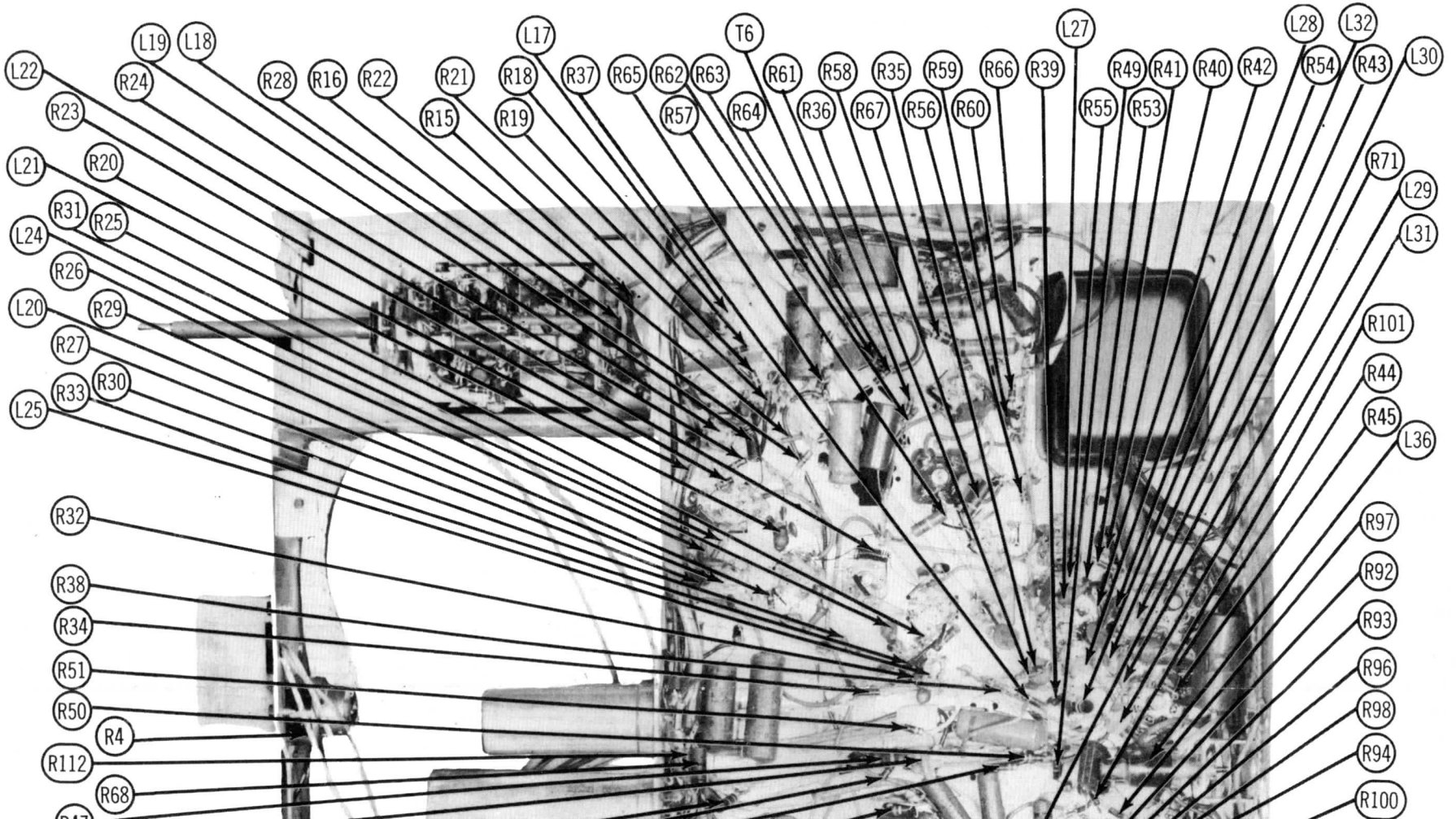
L22
L19
L18
L17
T6
L27
L28
L32
L30
R24
R28
R16
R22
R21
R18
R37
R65
R62
R63
R61
R58
R35
R59
R66
R39
R49
R41
R40
R42
R54
R43
R23
R15
R19
R57
R64
R36
R67
R56
R60
R55
R53
R71
L21
R20
L29
R31
R25
L31
L24
R26
R101
L20
R29
R44
R27
R45
R33
R30
L36
L25
R32
R97
R38
R92
R34
R93
R51
R96
R50
R98
R4
R94
R112
R100
R68

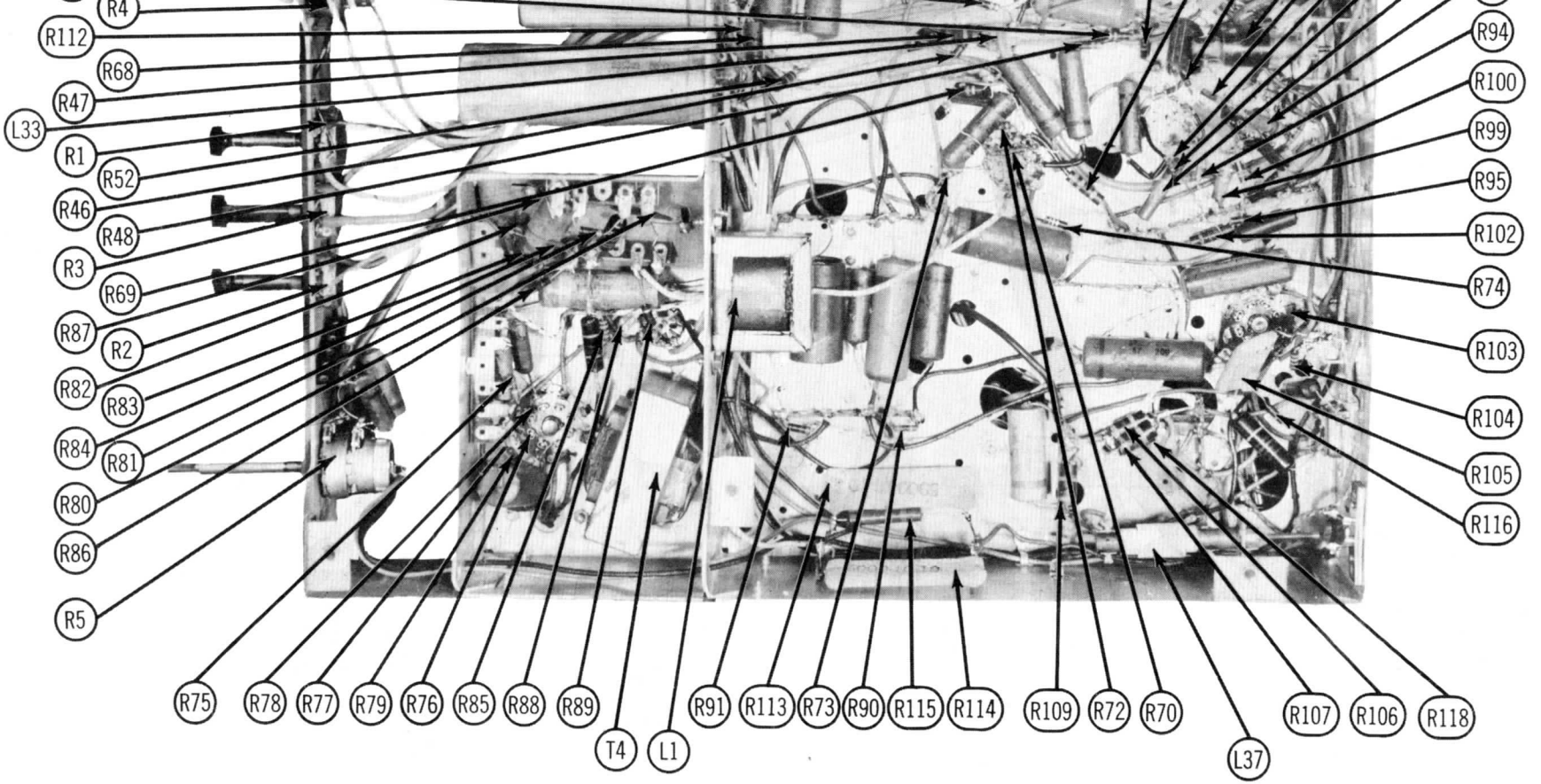


CHASSIS BOTTOM VIEW-RESISTOR AND INDUCTOR IDENTIFICATION