CAPEHART Ch. CT-109, CT-125, CT-139, CT-140, CT-157, CT-158, CT-171, CT-172 (CX-38 Series)

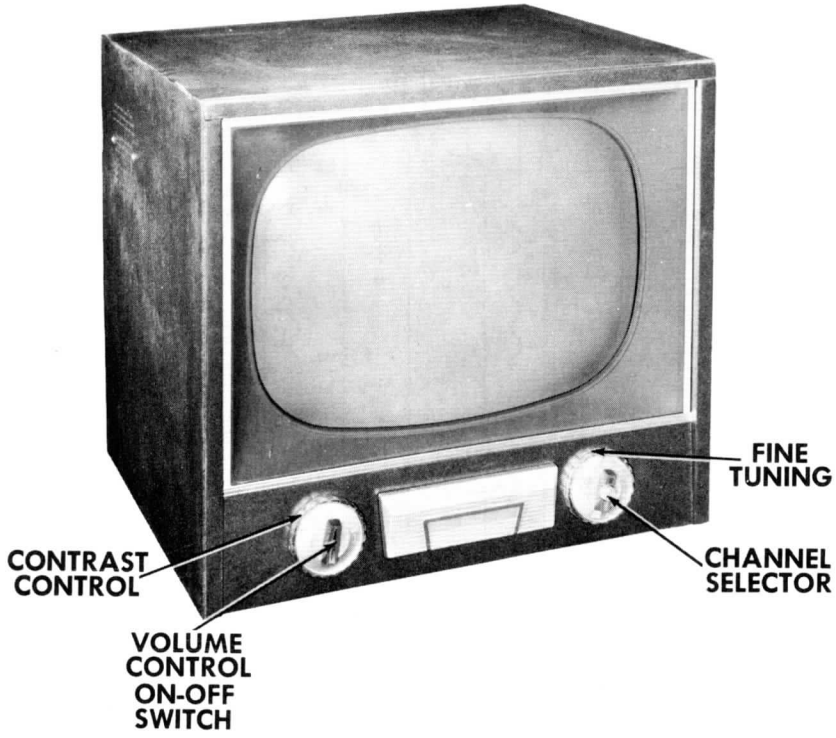

CAPEHART MODEL 2T215MSD-5 (Ch. CT-158)

TRADE NAME	Capehart	MODELS	CHASSIS
		1T175ES-4	CT-109 (CX-38 Series)
		2T215ES-4, 14F215B-4, 14F215M-4	CT-125 (CX-38 Series)
		1T175ES-5	CT-139 (CX-38 Series)
		2T215ES-5, 14F215B, -5, 14F215M-5	CT-140 (CX-38 Series)
		2T215BSD-4, 2T215MSD-4, 7C215B-4, 7C215BA-4, 7C215M-4, 7C215MA-4, 9C215BD-4, 9C215MD-4	CT-157 (CX-38 Series)
		2T215BSD-5, 2T215MSD-5, 7C215B-5, 7C215BA-5, 7C215M-5, 7C215MA-5, 9C215BD-5, 9C215MD-5	CT-158 (CX-38 Series)
		3T215BD-4, 3T215MD-4, 8C215BD-4, 8C215MD-4, 12F215BD, -4, 12F215MD-4, 18C215B-4, 18C215M-4	CT-171 (CX-38 Series)
		3T215BD-5, 3T215MD-5, 8C215BD-5, 8C215MD-5, 12F215BD-5, 12F215MD-5, 18C215B-5, 18C215M-5	CT-172 (CX-38 Series)

MANUFACTURER	Capehart-Farnsworth Corp., Fort Wayne, Indiana
TYPE SET	Television Receiver
TUBES	Twenty
POWER SUPPLY	110-120 Volts AC-60 Cycle RATING 1.62 Amp. @ 117 Volts AC
TUNING RANGE	Channels 2 thru 13 VHF, 14 thru 83 UHF, Video IF 45.75MC, Sound IF 41.25MC (Intercarrier)

INDEX

Alignment Instructions 6, 7
Disassembly Instructions 22
Horizontal Sweep Circuit Adjustments 14
Parts List and Descriptions ..... 15 thru 19
Photographs
Cabinet-Rear View 14
Capacitor Identification 4, 9
Chassis - Top View 3
RF Tuner 10, 11
Resistor Identification 13, 20
Photographs (Cont)
Trans., Inductor & Alignment Identification 21
Production Changes 19
Resistance Measurements 8
Servicing in the Field 22
Schematic 2
Trouble Shooting Aids 12, 21
Tube Failure Check Chart 5
Tube Placement Chart (Bottom View) 8
Tube Placement Chart (Top View) 5

HOWARD W. SAMS & CO., INC. • Indianapolis 5, Indiana

"The listing of any available replacement part herein does not constitute in any case a recommendation, warranty or guaranty by Howard W. Sams & Co., Inc., as to the quality and suitability of such replacement part. The numbers of these parts have been compiled from information furnished to Howard W. Sams & Co., Inc., by the manufacturers of the particular type of replacement part listed." "Reproduction or use, without express permission, of editorial or pictorial content, in any manner, is prohibited. No patent liability is assumed with respect to the use of the information contained herein. Copyright 1955 by Howard W. Sams & Co., Inc., Indianapolis 5, Indiana, U. S. of America. Copyright under International Copyright Union. All rights reserved under Inter-American Copyright Union (1910) by Howard W. Sams & Co., Inc." Printed in U. S. of America

CAPEHART Ch. CT-109, CT-125, CT-139, CT-140, CT-157, CT-158, CT-171, CT-172 (CX-38 Series)

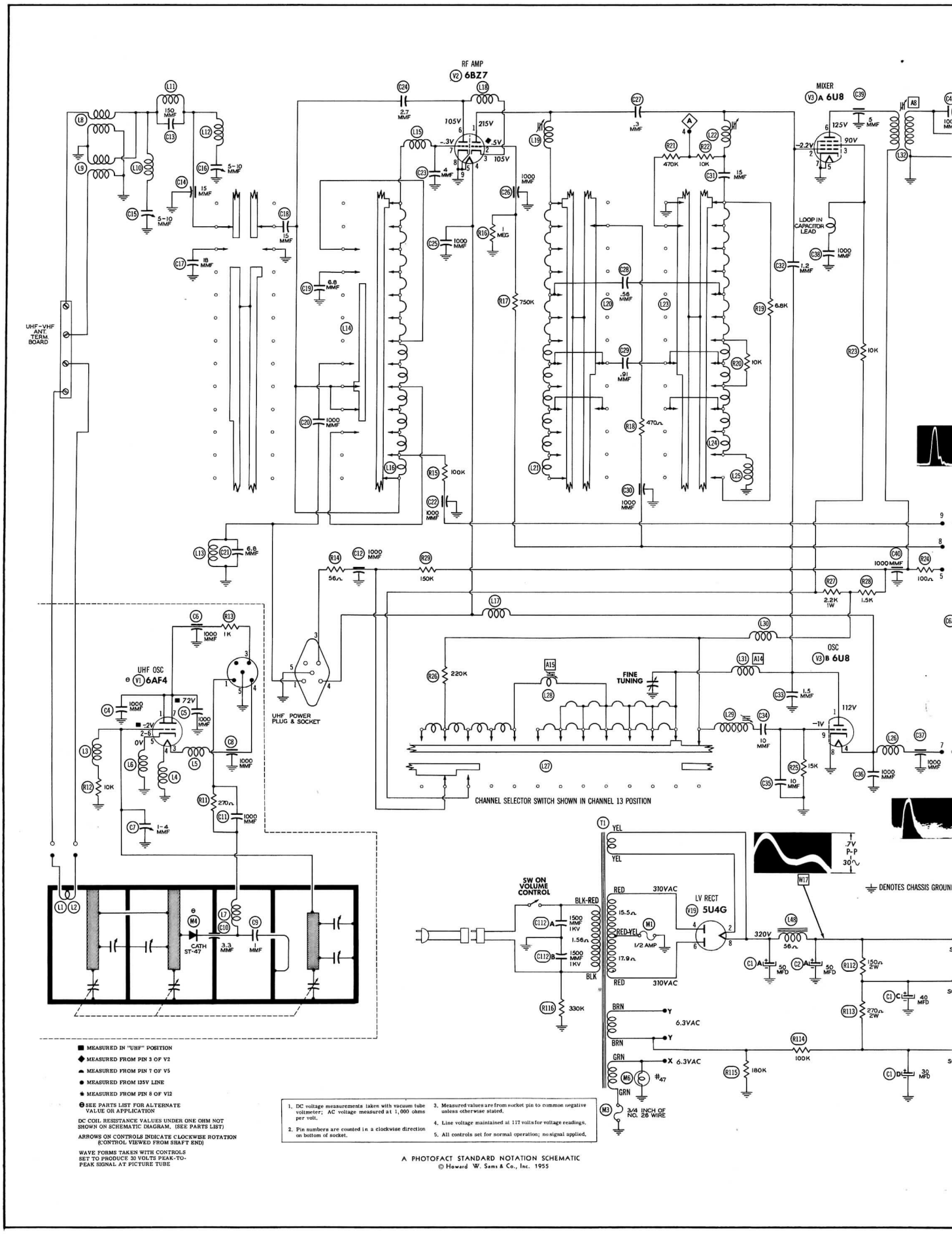

■ MEASURED IN "UHF" POSITION

◆ MEASURED FROM PIN 3 OF V2

◠ MEASURED FROM PIN 7 OF V5

● MEASURED FROM 135V LINE

✱ MEASURED FROM PIN 8 OF V12

⊖ SEE PARTS LIST FOR ALTERNATE VALUE OR APPLICATION

DC COIL RESISTANCE VALUES UNDER ONE OHM NOT SHOWN ON SCHEMATIC DIAGRAM. (SEE PARTS LIST)

ARROWS ON CONTROLS INDICATE CLOCKWISE ROTATION (CONTROL VIEWED FROM SHAFT END)

WAVE FORMS TAKEN WITH CONTROLS SET TO PRODUCE 30 VOLTS PEAK-TO-PEAK SIGNAL AT PICTURE TUBE

1. DC voltage measurements taken with vacuum tube voltmeter; AC voltage measured at 1,000 ohms per volt.
2. Pin numbers are counted in a clockwise direction on bottom of socket.
3. Measured values are from socket pin to common negative unless otherwise stated.
4. Line voltage maintained at 117 volts for voltage readings.
5. All controls set for normal operation; no signal applied.

A PHOTOFACT STANDARD NOTATION SCHEMATIC

© Howard W. Sams & Co., Inc. 1955

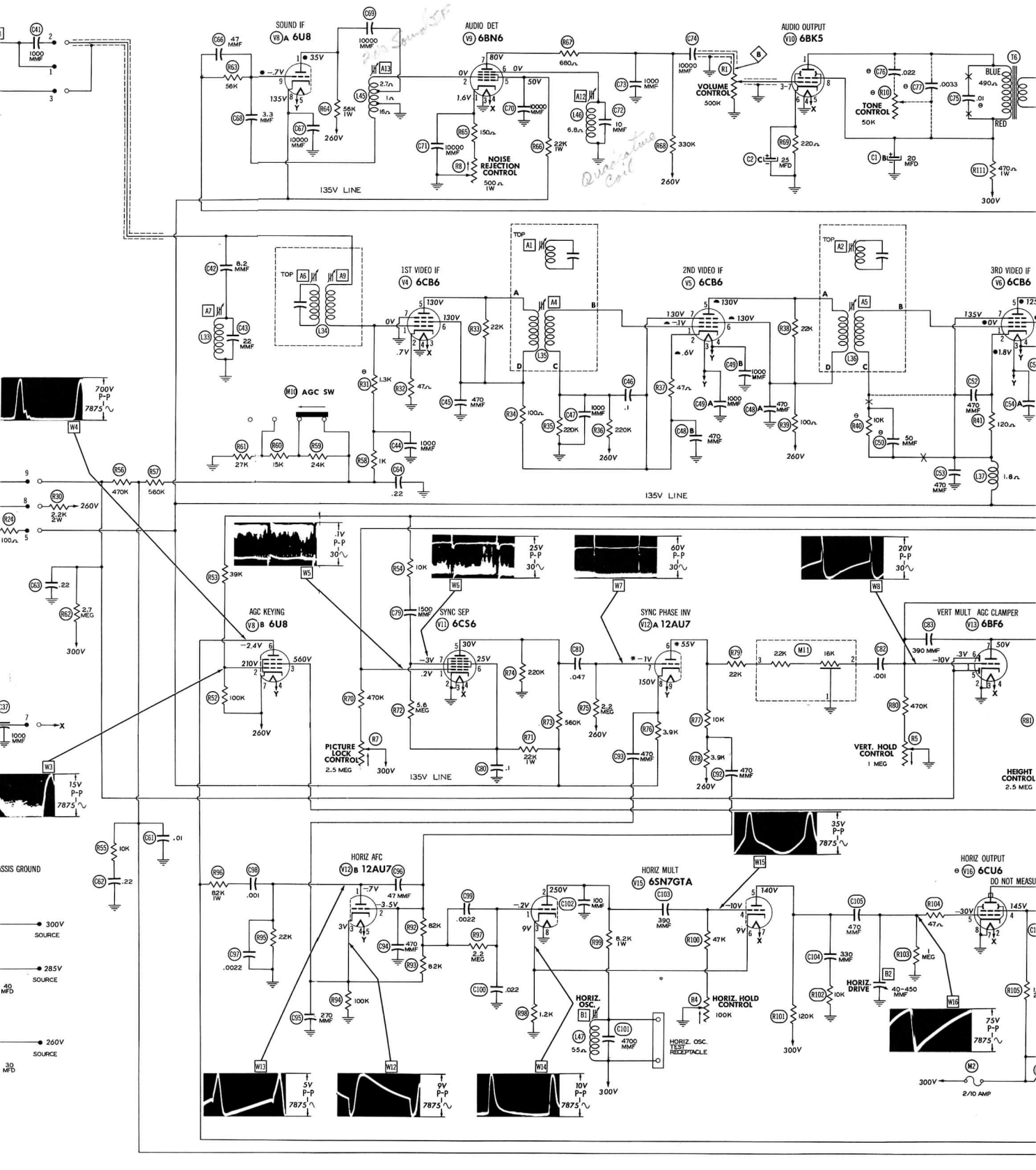
SOUND IF
V8 A 6U8
AUDIO DET
V9 6BN6
AUDIO OUTPUT
V10 6BK5
VOLUME CONTROL
500K
TONE CONTROL
50K
NOISE REJECTION CONTROL
500 Ω 1W
135V LINE
1ST VIDEO IF
V4 6CB6
2ND VIDEO IF
V5 6CB6
3RD VIDEO IF
V6 6CB6
M10 AGC SW
AGC KEYING
V8 B 6U8
SYNC SEP
V11 6CS6
SYNC PHASE INV
V12 A 12AU7
VERT MULT AGC CLAMPER
V13 6BF6
PICTURE LOCK CONTROL
2.5 MEG
VERT. HOLD CONTROL
1 MEG
HEIGHT CONTROL
2.5 MEG
HORIZ AFC
V12 B 12AU7
HORIZ MULT
V15 6SN7GTA
HORIZ OUTPUT
V16 6CU6
DO NOT MEASU
HORIZ. OSC.
HORIZ. OSC. TEST RECEPTACLE
HORIZ. HOLD CONTROL
100K
HORIZ. DRIVE
300V SOURCE
285V SOURCE
260V SOURCE
2/10 AMP

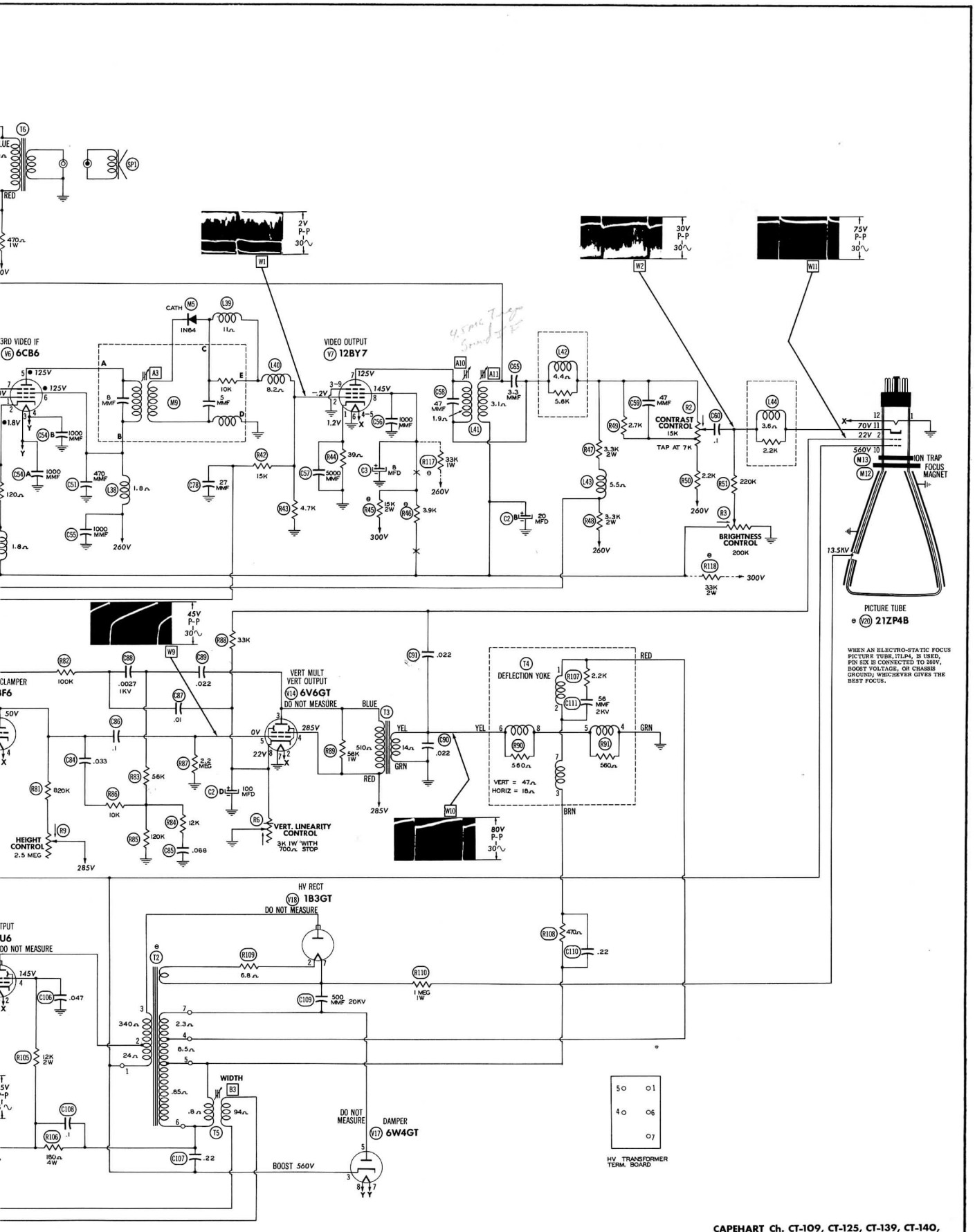

CAPEHART Ch. CT-109, CT-125, CT-139, CT-140, CT-157, CT-158, CT-171, CT-172 (CX-38 Series)

CAPEHART Ch. CT-109, CT-125, CT-139, CT-140, CT-157, CT-158, CT-171, CT-172 (CX-38 Series)

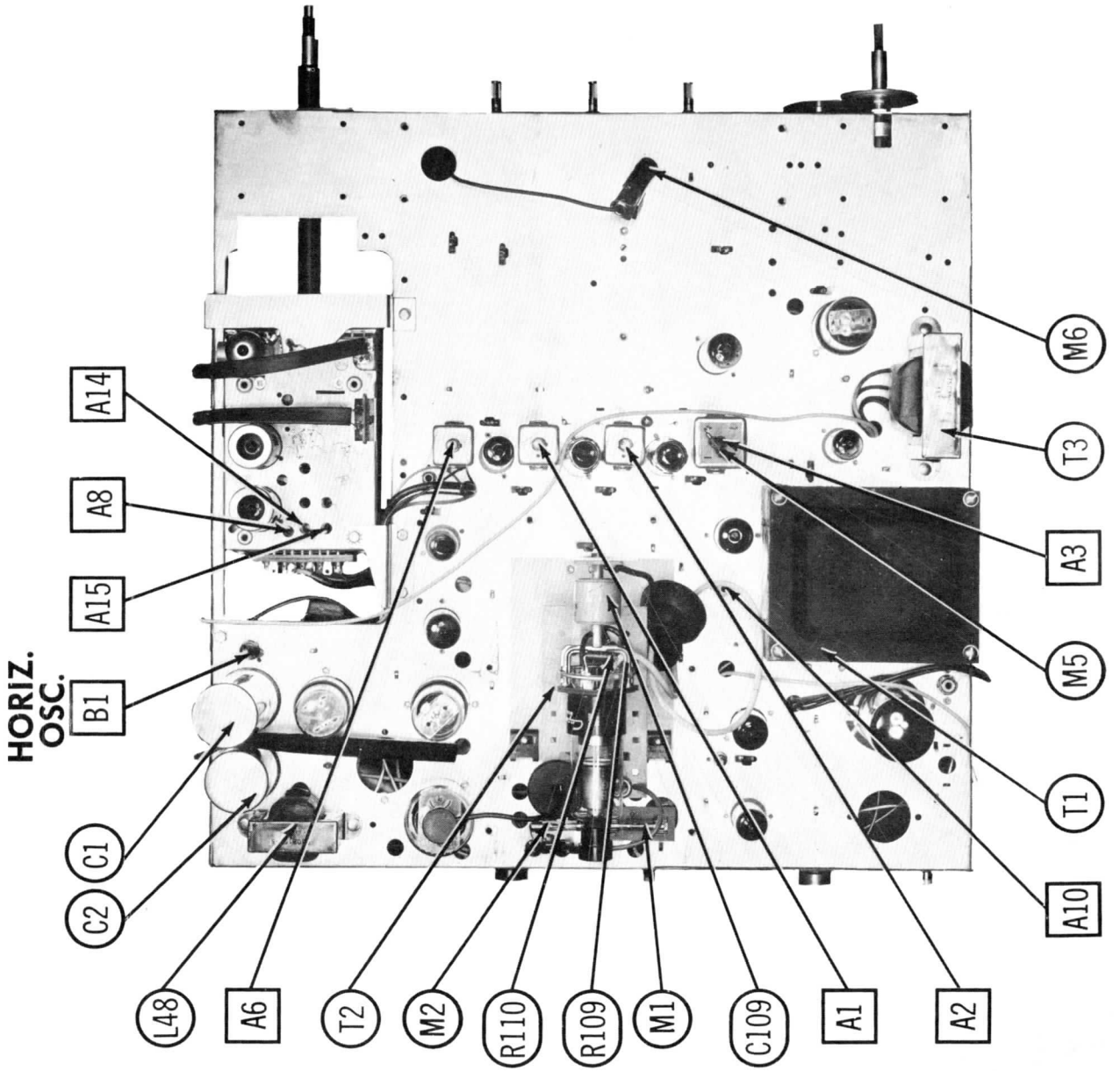

CHASSIS TOP VIEW

SET 288 FOLDER 2

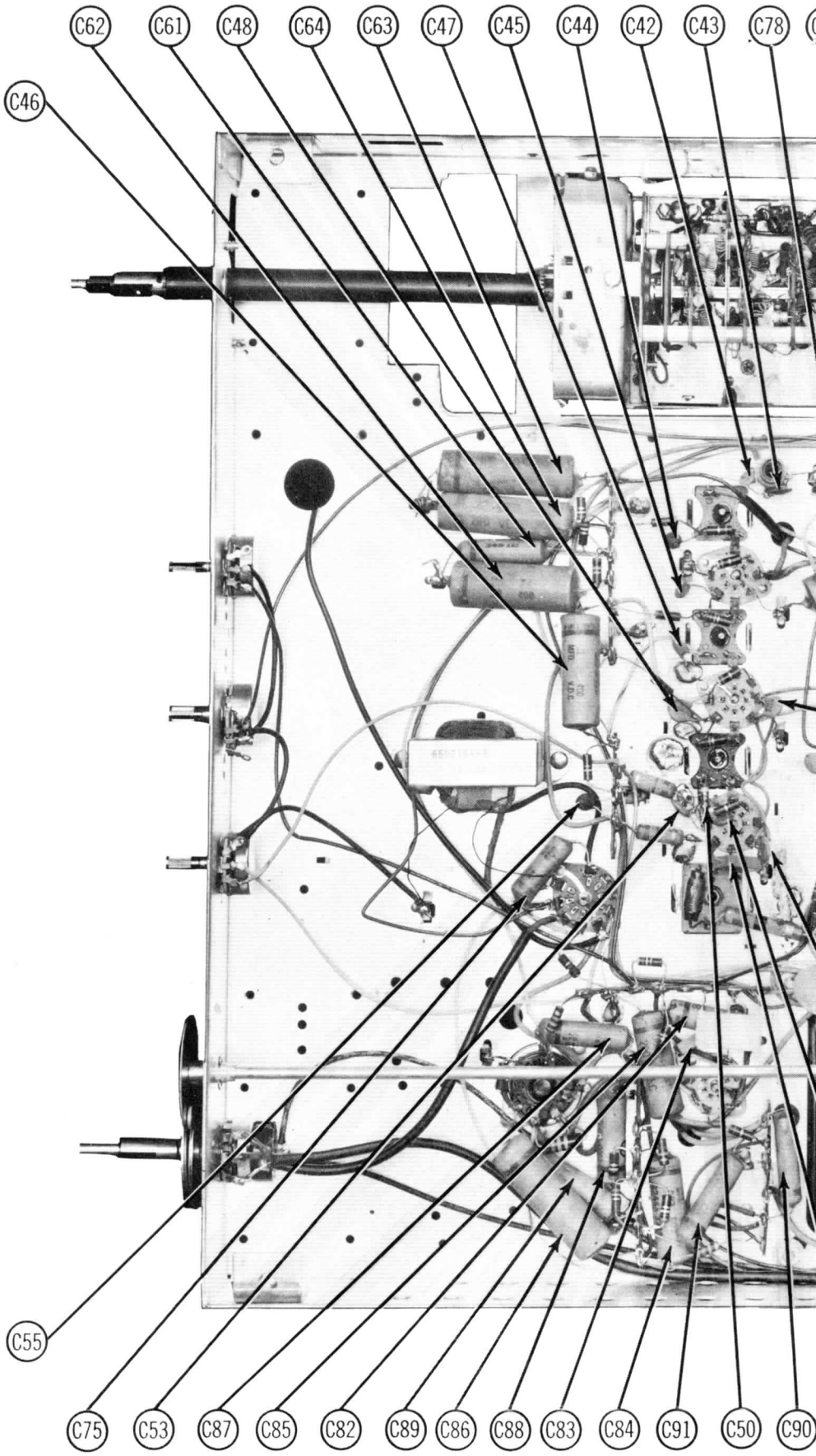

CHASSIS BOTTOM VIEW-CAP

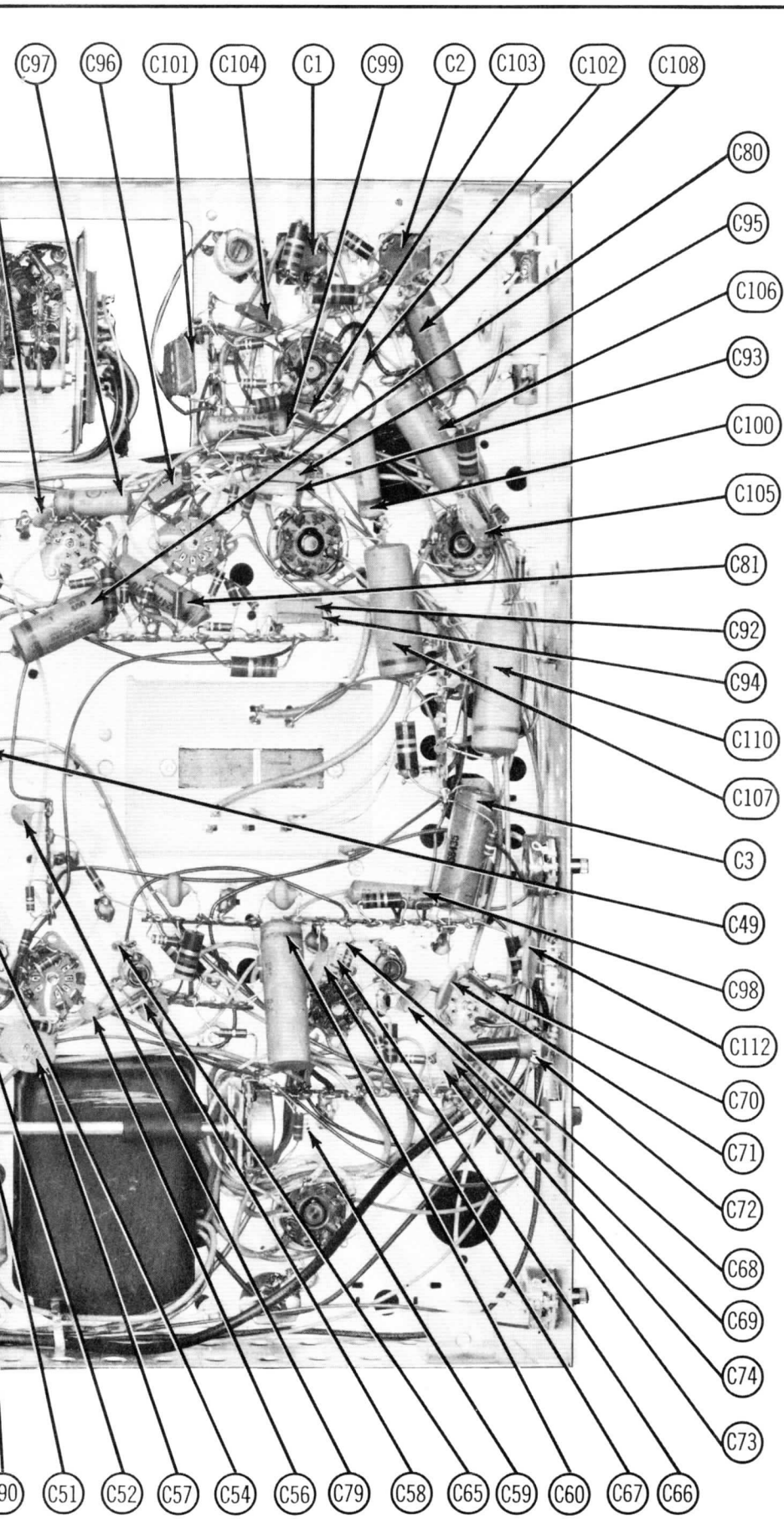

APACITOR IDENTIFICATION

TUBE PLACEMENT CHART

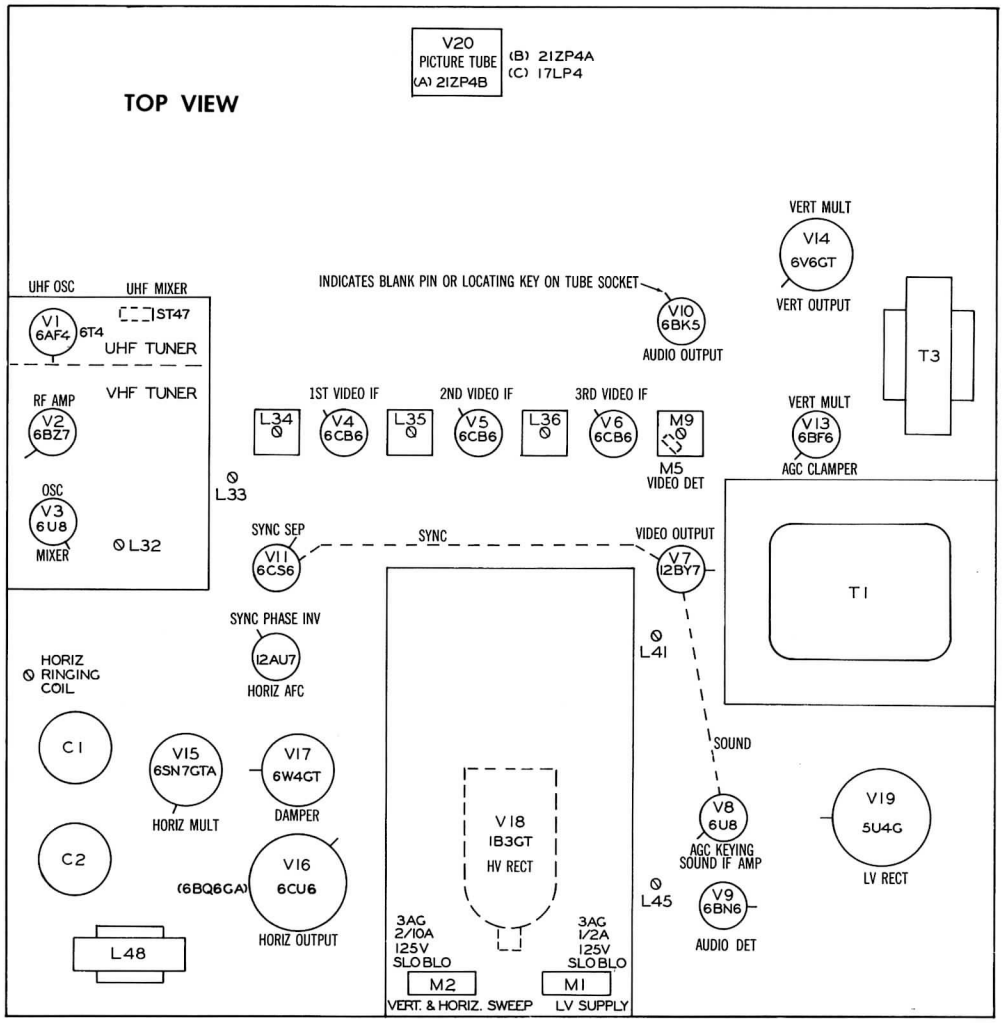

TUBE FAILURE CHECK CHART

The following chart lists tubes whose failures are most likely to produce the indicated symptoms. Refer to tube placement chart for location and type of tube.

POWER SUPPLY FAILURE
No raster, no sound - V19, Fuse (M1 & M3)

LOSS OF PICTURE OR SOUND
No pic, no sound, has raster - V3, V4, V5, V6, V7 (V1 UHF only)
No pic, no sound, has snow - V2, V3, V4
No pic, has sound, has raster - V7, V8, V20
Has pic, no sound - V8, V9, V10
Overloaded picture - V8, V13

SYNC FAILURE
No vert. sync - V12, V13, V14
No horiz. sync - V12, V15
No vert. or horiz. sync - V11, V12

SWEEP FAILURE
No raster, has sound - V15, V16, V17, V18, V20, Fuse (M2)
No vertical deflection - V13, V14
Poor vert. linearity or foldover - V13, V14
Poor horiz. linearity or foldover - V15, V16, V17
Narrow picture - V15, V16, V17, V18, V19
Vert. off freq. - V12, V13, V14
Horiz. off freq. - V12, V15

ALIGNMENT INSTRUCTIONS

ALIGNMENT INSTRUCTIONS—READ CAREFULLY BEFORE ATTEMPTING ALIGNMENT

The high voltage lead should be securely taped and kept away from chassis. Do not remove the horizontal multivibrator tube (V15) to disable the high voltage.

VIDEO IF ALIGNMENT

Remove the AGC keying tube (V8A) from its socket. Connect the negative lead of a 3 volt battery to the ungrounded side of C64.
Connect positive lead to chassis.
Connect a clip lead from pin 5 of V13 to chassis.
Use high sweep generator output to make trap adjustments A1, A2 and A6 visible.
Connect the synchronized sweep voltage from the sweep generator to the horizontal input of the oscilloscope for horizontal deflection.

	DUMMY ANTENNA	SWEEP GENERATOR COUPLING	SWEEP GENERATOR FREQUENCY	MARKER GENERATOR FREQUENCY	CHANNEL	CONNECT SCOPE	ADJUST	REMARKS
1.	.001MFD Capacitor	High side thru .001MFD to pin 1 (grid) of 6CB6 (V4). Low side to chassis	44MC (10MC Swp)	41.25MC	Any	Vert. Amp. thru 10KΩ to pin 2 (grid) of 12BY7 (V7). Low side to chassis.	A1	Disconnect shielded tuner lead from terminal "D" of L34. If a separate marker generator is used, couple loosely thru 10KΩ to pin 1 of V4. Adjust for MINIMUM response at marker frequency.
2.	"	"	"	47.25MC	"	"	A2	"
3.	"	"	"	44.1MC	"	"	A3	Attenuate sweep generator output for normal response on scope. Adjust A3 for maximum marker amplitude with minimum tilt.
4.	"	"	"	42.5MC	"	"	A4	Adjust A4 to position 42.5MC marker within 50% of maximum amplitude on response curve.
5.	"	"	"	45.75MC	"	"	A5	Adjust A5 to position 45.75MC marker within 50% of maximum amplitude on response curve. Repeat steps 1 thru 5. Reconnect shielded tuner lead to terminal "D" of L34.
6.	"	High side thru .001MFD to point A (on back tuner terminal). Low side to chassis.	"	47.25MC	Any non-interfering channel	"	A6	Adjust for MINIMUM response at 47.25MC marker frequency.
7.	"	"	"	39.75MC	"	"	A7	Adjust for MINIMUM response at 39.75MC marker frequency.
8.	Two 120Ω Carbon Resistors	Across VHF antenna terminal with 120Ω in each lead.	189MC (10MC Swp)	187.25MC 191.75MC	9	Vert. Amp. thru 10KΩ to pin 2 (grid) of 12BY7 (V7). Low side to chassis.		Adjust fine tuning control until sound marker falls in sound trap (Fig. 1).
9.	"	"	"	187.25MC 191.75MC	"	Vert. Amp. thru detector (Fig. 3) to pin 5 and 6 of 6CB6 (V4). Low side to chassis.	A8, A9	Connect a clip lead across pin 5 (plate) and pin 6 (screen) of V5. Adjust A8 and A9 for response curve similar to Fig. 1. Adjust for maximum amplitude and minimum tilt and to position of video marker. Remove short across pin 5 and 6 of V5.
10.	Direct	High side to an ungrounded tube shield over converter tube (V3). Low side to chassis.	44MC (10MC Swp)	39.75MC 41.25MC 42.25MC 45.75MC 47.25MC	Any non-interfering channel	Vert. Amp. thru 10KΩ to pin 2 (grid) of 12BY7 (V7). Low side to chassis.		Check for response similar to Fig. 2. If necessary, SLIGHTLY retouch A3 thru A9 for desired response. A1 and A2 should not be retouched. Remove short from pin 5 of V13. Remove bias supply. Replace V8A in its socket.

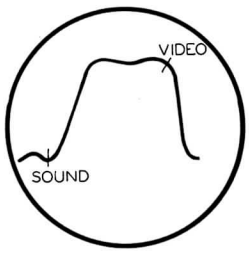

FIG.1

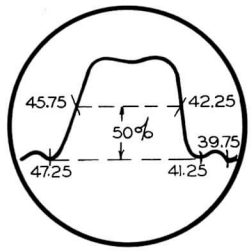

FIG.2

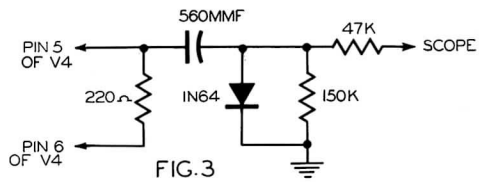

FIG.3

ALIGNMENT INSTRUCTIONS (cont)

SOUND IF ALIGNMENT USING FM SIGNAL GENERATOR, AM SIGNAL GENERATOR AND OSCILLOSCOPE

Preset the noise rejection control (R8) 90 degrees from maximum clockwise rotation.
Connect the synchronized sweep voltage from the sweep generator to the horizontal input of the oscilloscope for horizontal deflection.

	DUMMY ANTENNA	SWEEP GENERATOR COUPLING	SWEEP GENERATOR FREQUENCY	MARKER GENERATOR FREQUENCY	CHANNEL	CONNECT SCOPE	ADJUST	REMARKS
11.	.001MFD	High side to pin 2 (grid) of 12BY7 (V7). Low side to chassis.	Not used	4.5MC (400∿Mod)	Any	Vert. Amp. thru detector (Fig. 4) to pin 11 (cathode) of picture tube.	A10, A11	Connect a clip lead across terminals "B" and "C" of L35. Adjust A10 and A11 for MINIMUM 400∿ indication on scope.
12.	"	"	4.5MC (400∿Mod 50KC Swp)	4.5MC	"	Vert. Amp. to point Ⓑ. Low side to chassis.	A12	Adjust for maximum 400∿ indication on scope. Two peaks will be noted when adjusting A12. Adjust for peak with maximum amplitude.
13.	"	"	"	"	"	"	A13, A11	Attenuate generator output so that signal level is below limiting level of the 6BN6 as evidenced by background hiss and noise. Adjust A13 and A-11 for maximum response on scope.
14.	"	"	Not used	4.5MC (400∿Mod)	"	"	R8	Use high signal generator output and adjust R8 for minimum 400∿ indication on scope.
15.	"	"	4.5MC (400∿Mod 50KC Swp)	4.5MC	"	"	A12	Retouch A12 for maximum 400∿ indication on scope. Use low generator output. Remove short from L35. Tune in weakest station in that area and adjust R8 for MINIMUM buzz and hiss. Tune in strongest station in that area and adjust A12 for clearest sound.

VHF OSCILLATOR ALIGNMENT

Connect bias supply as under Video IF Alignment.
Connect a clip lead from pin 5 of V13 and chassis.
Remove AGC keying tube (V8A from its socket.
Connect the synchronized sweep voltage from the sweep generator to the horizontal input of the oscilloscope for horizontal deflection.
The sweep generator output lead should be terminated with its characteristic impedance, usually 50 ohms.
Set the fine tuning control to the mid-position of its range.

	DUMMY ANTENNA	SWEEP GENERATOR COUPLING	SWEEP GENERATOR FREQUENCY	MARKER GENERATOR FREQUENCY	CHANNEL	CONNECT SCOPE	ADJUST	REMARKS
16.	Two 120Ω Carbon Resistor	Across VHF antenna terminals with 120Ω in each lead.	213MC (10MC Swp)	211.25MC 215.75MC	13	Vert. Amp. thru 10KΩ to pin 2 (grid) of 12BY7 (V7). Low side to chassis.	A14	If separate marker generator is used couple it loosely across antenna terminals. Adjust to place sound marker in trap notch as in Fig. 5. Video marker should fall at 50% on high frequency slope of response curve.
17.	"	"	207MC (10MC Swp)	205.25MC 209.75MC	12	"		Check each channel for response curve similar to Fig. 5. If necessary make SLIGHT compromise adjustment of A14. SLIGHTLY rotate fine tuning control while observing response on each channel.
			201MC (10MC Swp)	199.25MC 203.75MC	11			
			195MC (10MC Swp)	193.25MC 197.75MC	10			
			189MC (10MC Swp)	187.25MC 191.75MC	9			
			183MC (10MC Swp)	181.25MC 185.75MC	8			
			177MC (10MC Swp)	175.25MC 179.75MC	7			
18.	"	"	85MC (10MC Swp)	83.25MC 87.75MC	6	"	A15	Check for response curve similar to Fig. 5.
19.	"	"	79MC (10MC Swp)	77.25MC 81.75MC	5	"		Check each channel for response curve similar to Fig. 5. If necessary, make compromise adjustment of A15. Replace V8A in its socket. Remove short from pin 5 of V13.
			69MC (10MC Swp)	67.25MC 71.75MC	4			
			63MC (10MC Swp)	61.25MC 65.75MC	3			
			57MC (10MC Swp)	55.25MC 59.75MC	2			

VHF RF AND MIXER ALIGNMENT

The RF and mixer portion of the VHF tuner has been properly aligned at the factory and is very stable. Alignment of this portion is not recommended in the field.

UHF TUNER ALIGNMENT

The UHF portion of this receiver has been properly aligned at the factory, and is very stable. Alignment of this portion is not recommended in the field.

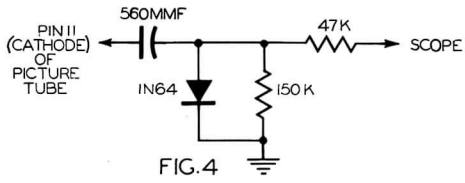

FIG.4

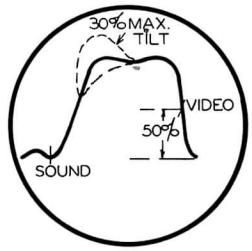

FIG.5

RESISTANCE MEASUREMENTS

Item	Tube	Pin 1	Pin 2	Pin 3	Pin 4	Pin 5	Pin 6	Pin 7	Pin 8	Pin 9
V 1	6AF4	*■4.8KΩ	10KΩ	.1Ω	0Ω	0Ω	10KΩ	*■4.8KΩ		
V 2	6BZ7	†3KΩ	500KΩ	INF	.1Ω	0Ω	INF	1Meg	0Ω	0Ω
V 3	6U8	■1.6KΩ	500KΩ	■14KΩ	.1Ω	0Ω	■100Ω	0Ω	0Ω	15KΩ
V 4	6CB6	50KΩ	47Ω	.1Ω	0Ω	▲100Ω	▲100Ω	0Ω		
V 5	6CB6	130KΩ	INF	†90KΩ	†90KΩ	†600Ω	†600Ω	INF		
V 6	6CB6	■10KΩ	■120Ω	†90KΩ	†90KΩ	†500Ω	†500Ω	70KΩ		
V 7	12BY7	39Ω	4.7KΩ	0Ω	.1Ω	.1Ω	0Ω	†5KΩ	†15KΩ	0Ω
V 8	6U8	†56KΩ	†35KΩ	▰0Ω	†90KΩ	†90KΩ	560KΩ	†500Ω	70KΩ	120KΩ
V 9	6BN6	400Ω	3.7Ω	0Ω	.1Ω	■22KΩ	6.8Ω	†330KΩ		
V 10	6BK5	†1.1KΩ	NC	200KΩ	0Ω	.1Ω	220Ω	200KΩ	†600Ω	TP
V 11	6CS6	20KΩ	0Ω	0Ω	.1Ω	■200KΩ	■22KΩ	5.6Meg		
V 12	12AU7	22KΩ	260KΩ	100KΩ	†90KΩ	†90KΩ	†14KΩ	2.2Meg	■3.9KΩ	†90KΩ
V 13	6BF6	750KΩ	0Ω	0Ω	.1Ω	800KΩ	800KΩ	†2Meg		
V 14	6V6GT	NC	.1Ω	†700Ω	†200Ω	2.2Meg	NC	0Ω	1.1KΩ	
V 15	6SN7GTA	2.3Meg	†8.3KΩ	1.2KΩ	100KΩ	†120KΩ	1.2KΩ	.1Ω	0Ω	
V 16	6CU6	NC	.1Ω	TP	†12KΩ	1Meg	NC	0Ω	0Ω	TOP CAP ▰24Ω
V 17	6W4GT	NC	NC	INF	NC	†250Ω	NC	†90KΩ	†90KΩ	
V 18	1B3GT	PINS		1 - 8	HAVE	INF	RESISTANCE			TOP CAP ▰364Ω
V 19	5U4G	NC	60KΩ	NC	16Ω	NC	18Ω	TP	60KΩ	
V 20	21ZP4B	0Ω	35KΩ	PIN 10 ▰0Ω	PIN 11 ■330KΩ	PIN 12 .1Ω				

* MEASURED IN "UHF" POSITION
■ MEASURED FROM 135V LINE
† MEASURED FROM PIN 8 OF V19
▲ MEASURED FROM PIN 7 OF V5
TP - TIE POINT
NC - NO CONNECTION
▰ MEASURED FROM PIN 3 OF V17

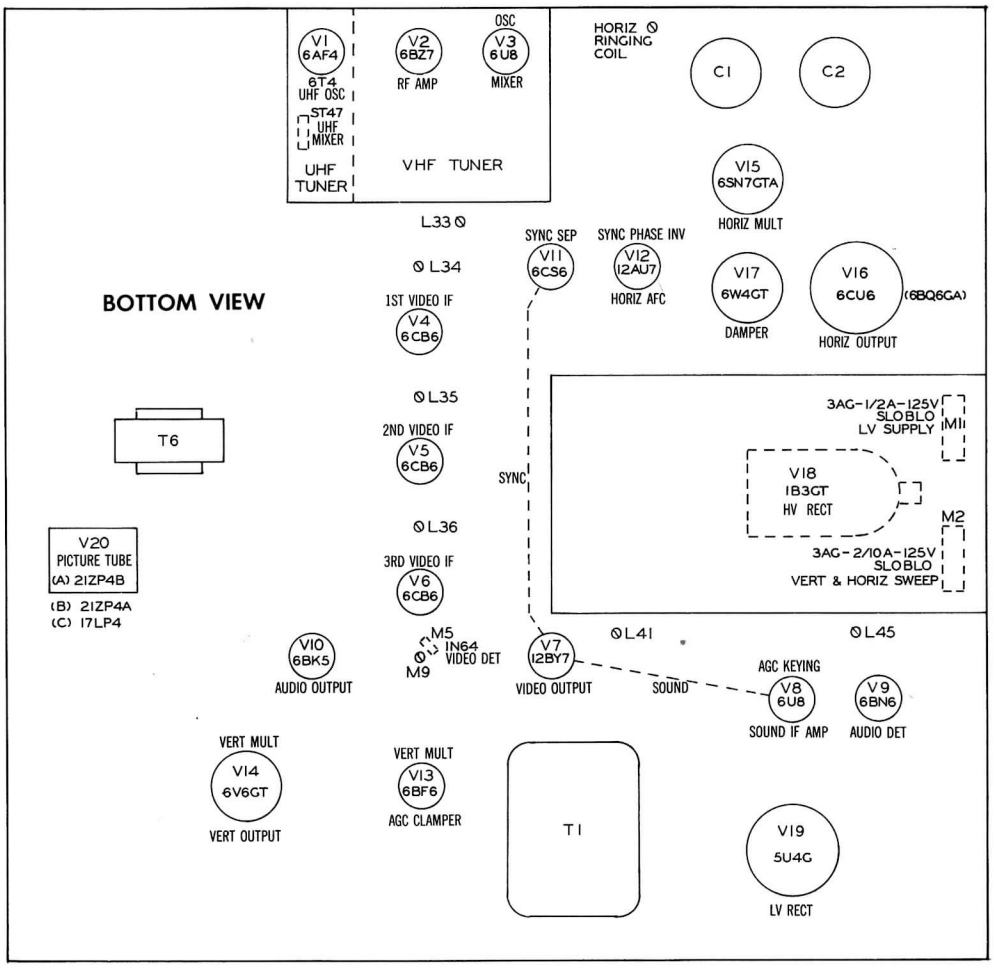

TUBE PLACEMENT CHART

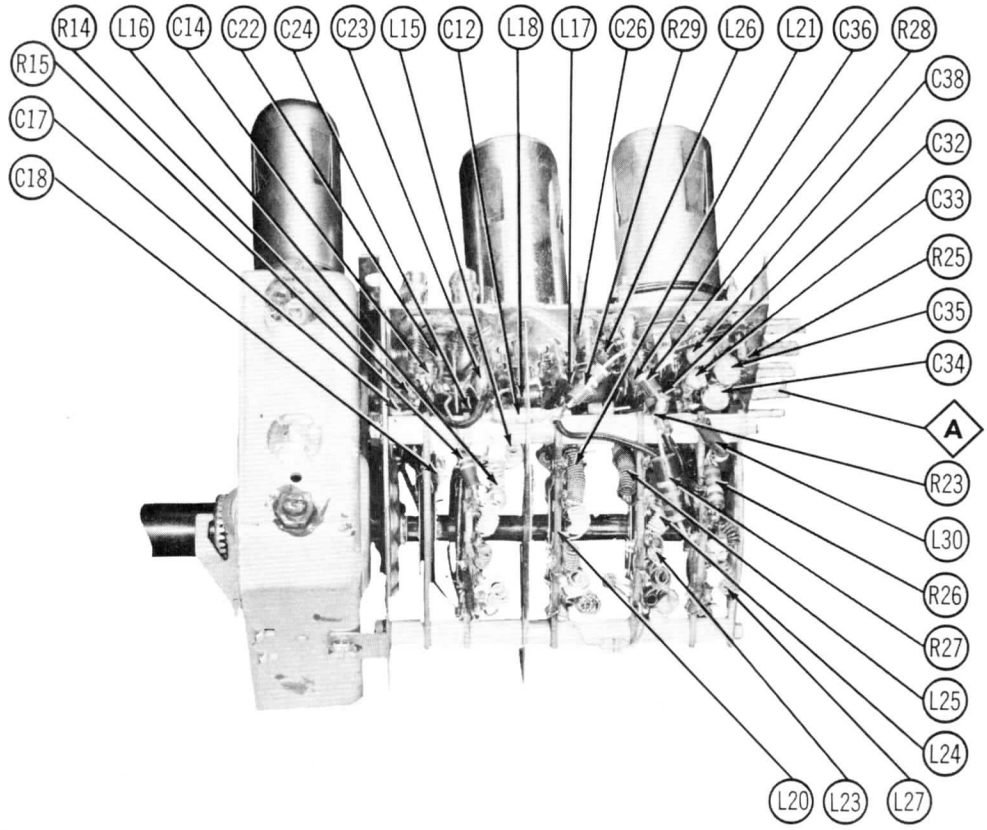

UHF-VHF TUNER-RIGHT SIDE

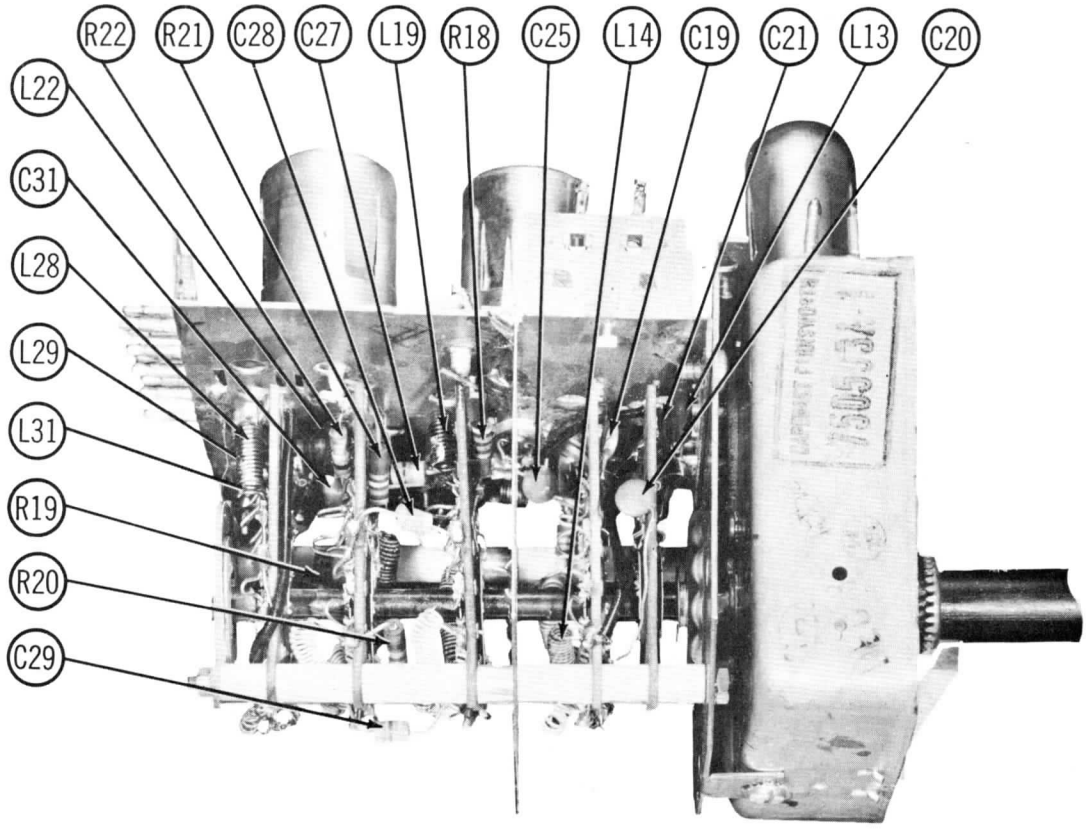

UHF-VHF TUNER-LEFT SIDE

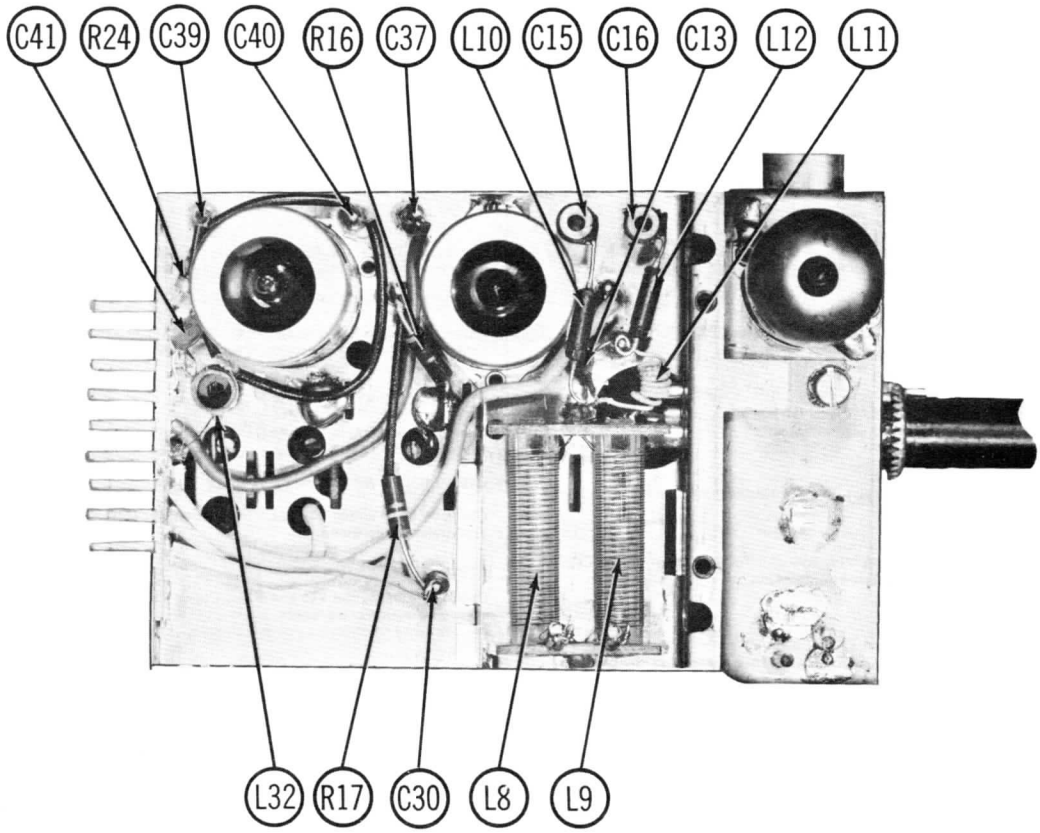

UHF-VHF TUNER TOP VIEW

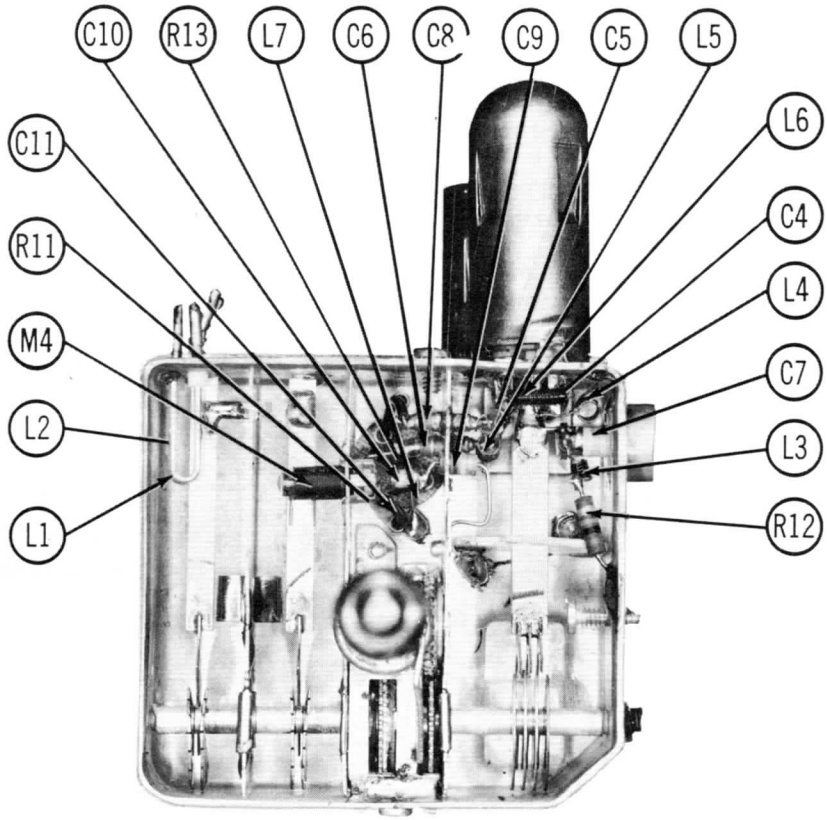

UHF TUNER FRONT VIEW

TROUBLE SHOOTING AIDS

SWEEP

HORIZONTAL

LOSS OF SWEEP

Follow procedure outlined under "Loss of High Voltage."

INSUFFICIENT SWEEP

Check by substitution V16, V17 and V19. Check adjustments B2 and B3. Check T2, T4A, C105, R105, R106 and other associated components.

DRIVE LINES

Check by substitution V16 and V17. Check adjustment B2. Check C105, R105, T2, T4A and other associated components.

COMPRESSED LEFT SIDE

Check by substitution V16 and V17. Check horizontal output and damper stages for component failure or change of value.

FOLDS

Follow procedure outlined under "Drive Lines."

PIE CRUST EFFECT

Check by substitution V15, V16 and V17. Check C100 for open. Check L47, C101, C99, R100 and other associated components.

XMAS TREE EFFECT

Check by substitution V15, V16 and V17. Check T2 and T4 for internal arcing. Check L47, C101, C98, C97, R96 and other associated components.

VERTICAL

LOSS OF SWEEP

Check by substitution V13 and V14. Check waveform W9.

If Satisfactory	If Unsatisfactory
Check T3, T4B, C2D, R6 and other associated components.	Check C82, C83, C86, R9, R81, R80 and other associated components.

INSUFFICIENT SWEEP

Check by substitution V13 and V14. Check height and vertical linearity controls for proper operation. Check T3, R81 and other associated components.

COMPRESSED AT BOTTOM

Check by substitution V13 and V14. Check R9, R81, C82, C86 and other associated components.

COMPRESSED AT TOP

Check by substitution V13 and V14. Check R6, C2D, T3, T4B and other associated components.

FOLDS

Check by substitution V13 and V14. Check C84, C85, R86, R85, T3, and other associated components.

SYNC

LOSS OF VERTICAL AND HORIZONTAL SYNC

Check by substitution V11 and V12. Check C79, C80, C81, R71, R73, R77, R78 and other associated components.

LOSS OF VERTICAL SYNC — HORIZONTAL SYNC SATISFACTORY

Substitute V13. Check vertical integrator network. Check C82, C83, R80, R5 and other associated components.

LOSS OF HORIZONTAL SYNC — VERTICAL SYNC SATISFACTORY

Check by substitution V12 and V15. Check C92, C93, C99, C100, L47, R99 and other associated components.

HORIZONTAL BENDING

Check by substitution V11, V12 and V15. Check horizontal AFC network.

VIDEO

LOSS OF VIDEO

Substitute V7. Check C56, C58, C59, C60, C3, R46, R47, R48, L43 and other associated components.

SOUND BARS (4.5 MC BEAT)

Adjust tuner fine tuning for best sound and picture. Check adjustment A10. Check video IF Alignment.

POOR CONTRAST

Substitute V7. Check L40, L42, L44, C59, C60, R45 and other associated components.

NEGATIVE PICTURE

Substitute V7. Check picture tube. Check C59, C60 and other associated components.

SMEAR

Substitute V7. Check L39, L40, L42, L44, C60 and other associated components.

WIDE BLACK BAR ACROSS PICTURE

Check by substitution V2, V4, V5, V6 and V7 for heater to cathode leakage.

AUDIO

WEAK OR NO SOUND

Check by substitution V8, V9 and V10. Check stage V10 using audio signal generator. Apply audio signal across R1.

If Satisfactory	If Unsatisfactory
Check audio detector and audio IF stages for component failure or change of value.	Check C74, C75, C2C, R111, R67, R66, R68, T6, speaker and other associated components.

BUZZ

Adjust tuner fine tuning for best sound and picture. Check adjustments R8 and A12 for minimum buzz. If still unsatisfactory, check audio IF alignment.

DISTORTED

Follow procedure outlined under "Weak or no Sound."

POWER

DEAD SET

If filaments fail to light, check AC interlock assembly. Check switch on volume control and T1. If filaments light, substitute V19. Check B+ filter and decoupling network. Check fuse, M1.

SMALL AND/OR DIM PICTURE

Substitute V19. Check B+ filter and decoupling network.

TROUBLE SHOOTING AIDS (cont)

HIGH VOLTAGE

LOSS OF HIGH VOLTAGE

Check by substitution V15, V16, V17 and V18. Check fuse, M2. Check waveform W16.

If Satisfactory	If Unsatisfactory
Check T2, T4A, T5, C107, C108 C106, R106, R105 and other associated components.	Check L47, C101, C102, C103, C105, R101, R98, R99 and other associated components.

INSUFFICIENT HIGH VOLTAGE

Check by substitution V16, V17 and V19. Check C103, C105, R105, T2, T4A and other associated components.

BLOOMING

Check by substitution V16, V17, V18 and V19. Check R105, R110, C105, T2 and other associated components.

GENERAL

RASTER, SOUND, NO PICTURE

Follow procedure outlined under "Loss of Video."

RASTER, PICTURE, NO SOUND

Follow procedure outlined under "Weak or no Sound."

RASTER, NO SOUND, NO PICTURE

Check by substitution V2, V3, V4, V5, V6 and V7. Check video IF components for failure or change of value. Raster, No Sound, No Picture, UHF, substitute V1.

NO RASTER, NO SOUND

Follow procedure outlined under "Dead Set."

KEYSTONE EFFECT

Check T4 and its associated components.

INTERMITTENT STREAKS

Check high voltage section for corona discharge and arcing.

Symptoms shown are assumed and are not indicative of the quality and workmanship of this equipment.

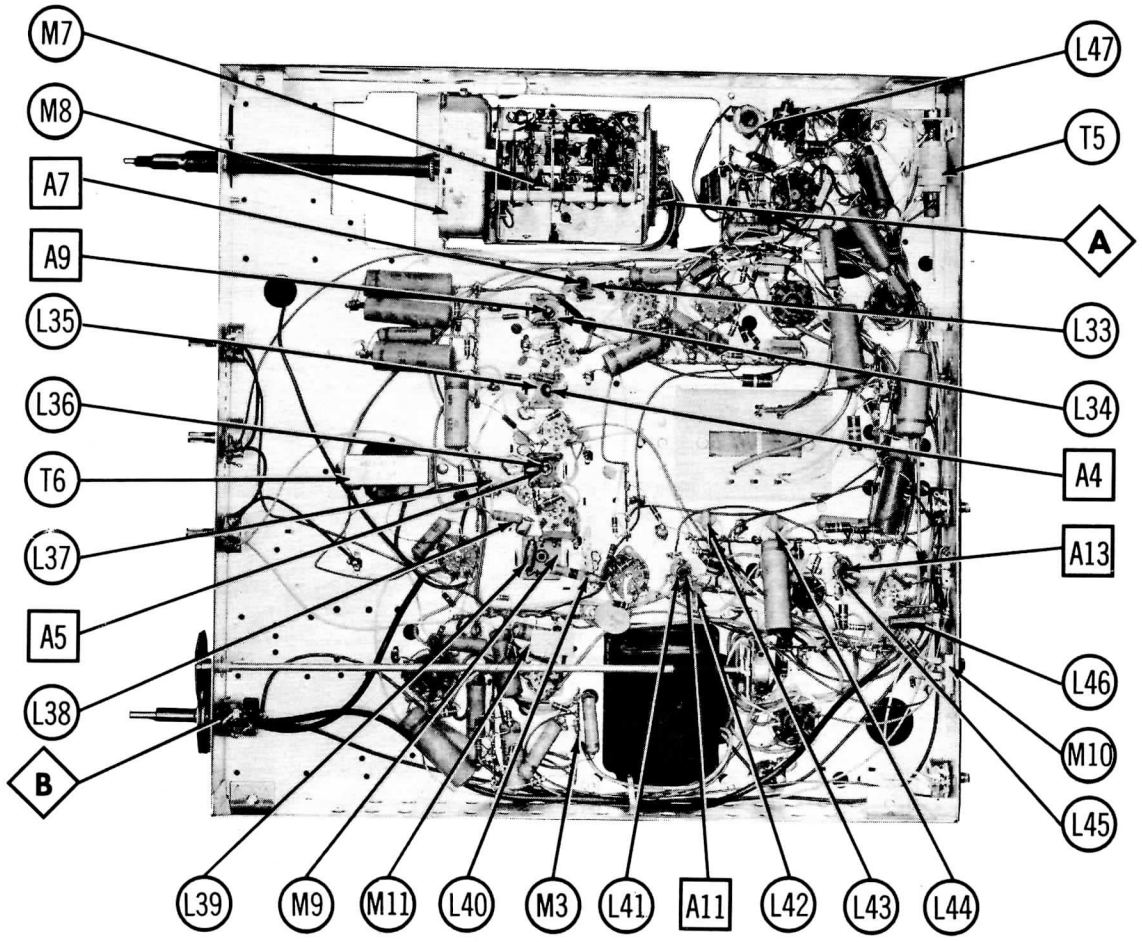

CHASSIS BOTTOM VIEW-TRANS., INDUCTOR & ALIGN. IDENTIFICATION

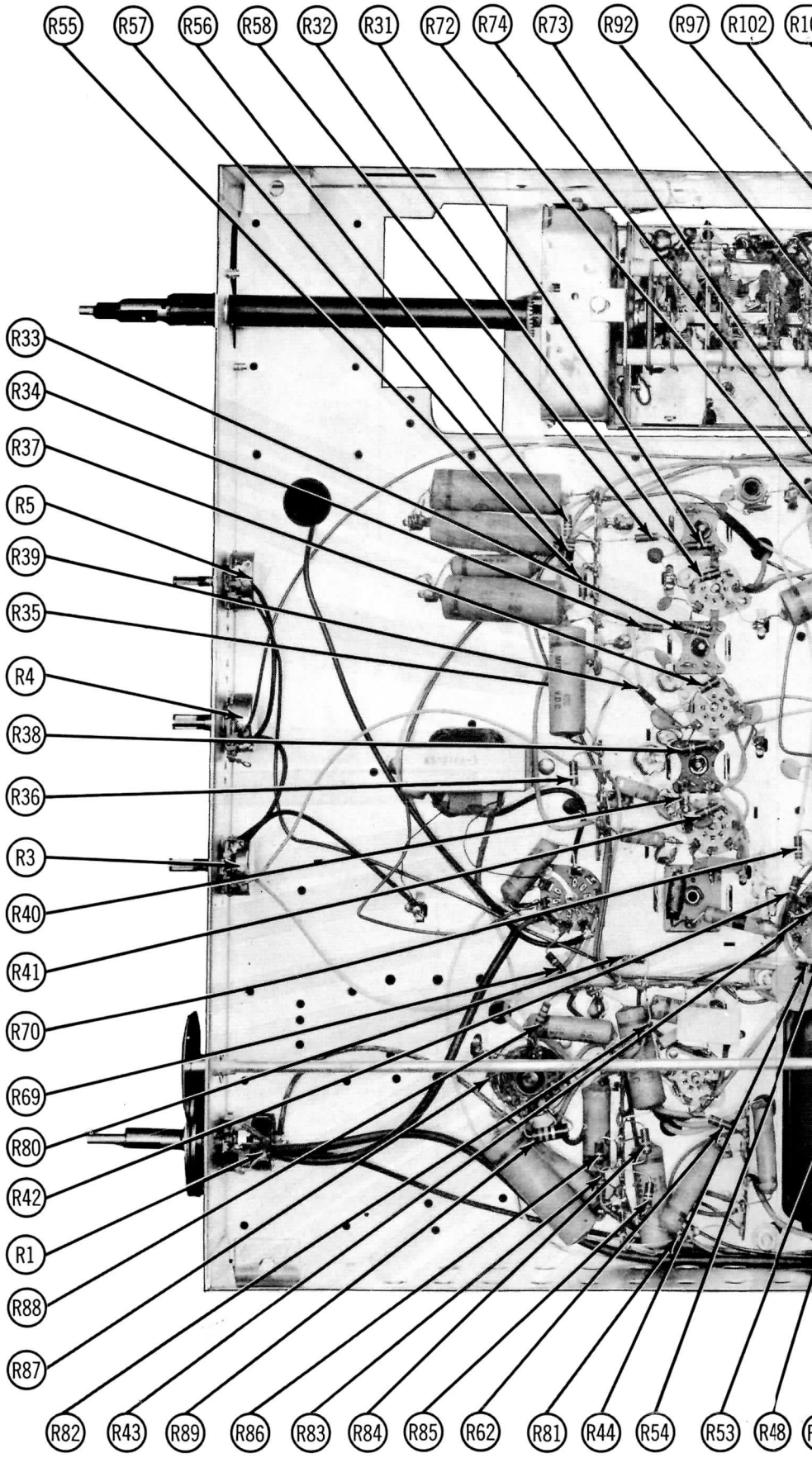

CHASSIS BOTTOM VIEW-RES

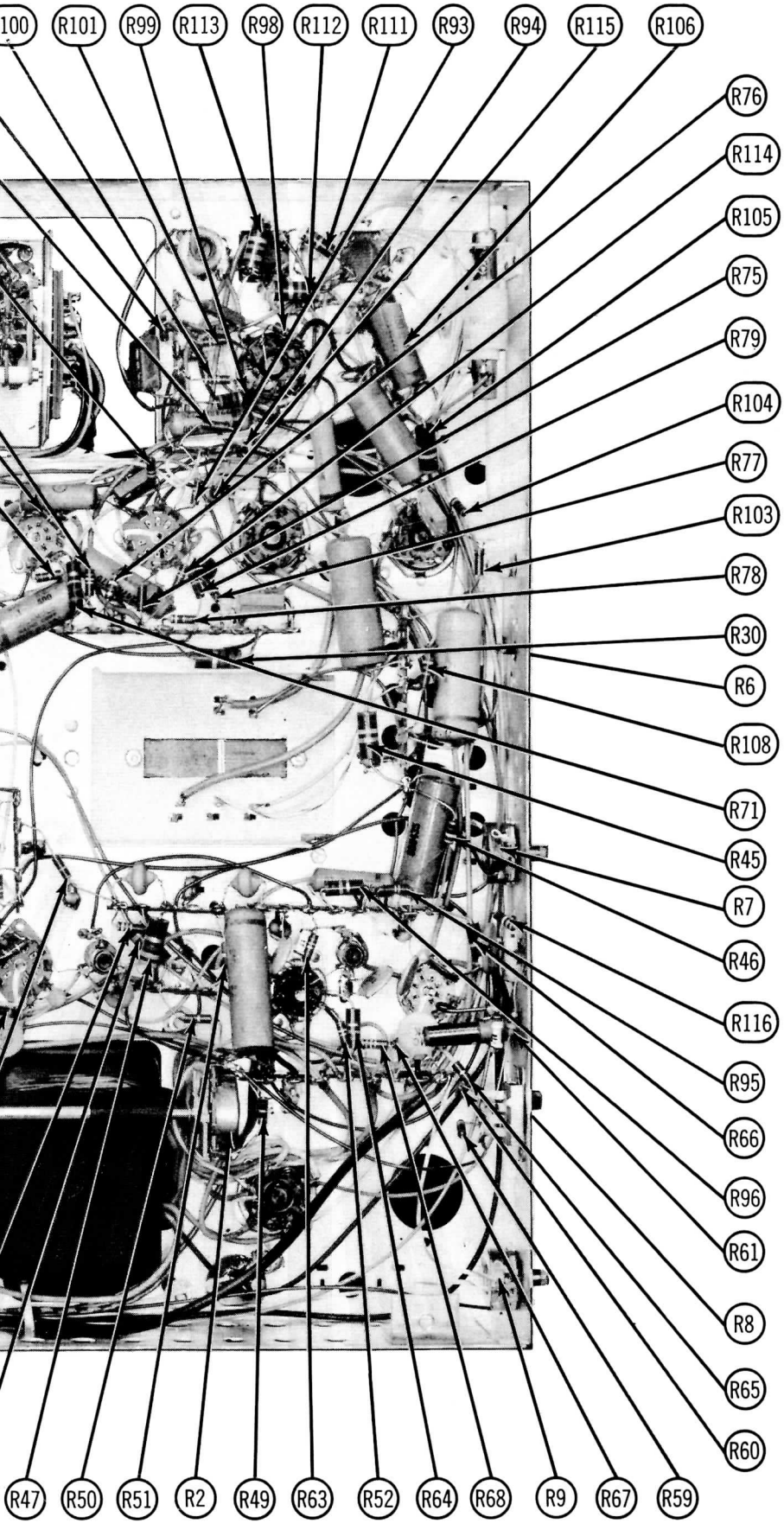

SISTOR IDENTIFICATION

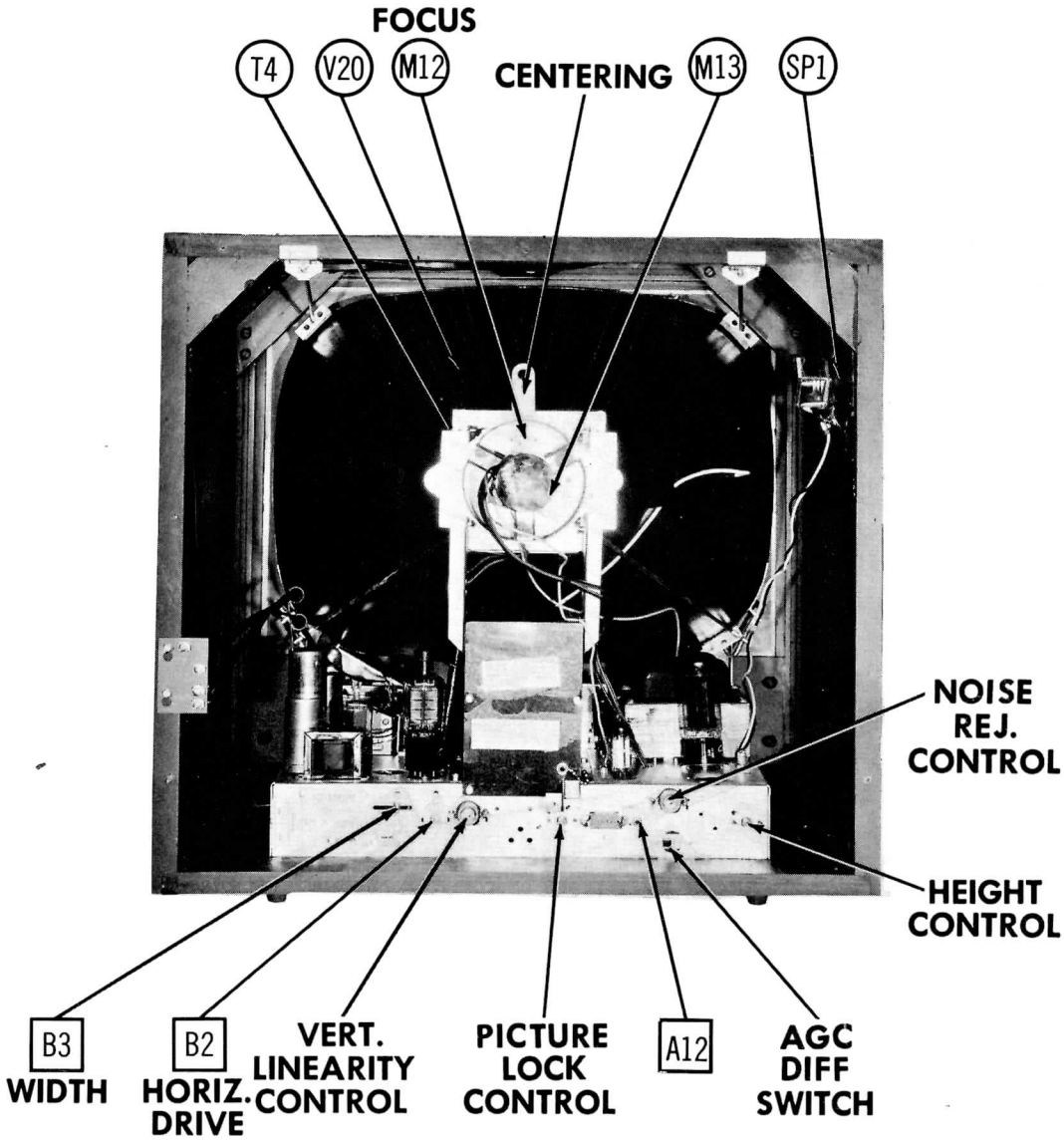

CABINET—REAR VIEW

HORIZONTAL SWEEP CIRCUIT ADJUSTMENTS

Turn the set on and tune in a TV station, preferably a test pattern.

1. Short out the horizontal oscillator coil (L47) (red and blue leads on terminal inside of HV cage).
2. Adjust the horizontal hold control (R4) until picture synchronizes horizontally. Set R4 so that approximately 1/4" is between the right edge of the raster and the right edge of the picture can be seen. Adjust the contrast control. counter clockwise and move picture off center to observe this condition.
3. Remove short from L47 and adjust the horizontal oscillator slug (B1) to again provide approximately 1/4" between the right edge of the raster and the right edge of picture.
4. Switch off channel and back again; picture should remain locked in sync. If necessary repeat steps 1 thru 4 until proper horizontal sync is obtained. Recenter picture to normal position.

Adjust the horizontal drive trimmer (B2) counter clockwise as far as possible without the presence of white vertical lines or compression near center of the picture.

Adjust the horizontal width slug (B3) for a picture slightly wider than necessary to fill the mask horizontally.

If B2 and B3 are adjusted an excessive amount, steps 1 thru 4 above should be rechecked.

PARTS LIST AND DESCRIPTIONS

TUBES (SYLVANIA, GENERAL ELECTRIC, WESTINGHOUSE)

ITEM No.	USE	REPLACEMENT DATA: CAPEHART PART No.	REPLACEMENT DATA: STANDARD REPLACEMENT	RETMA BASE TYPE	NOTES
V1	UHF Osc.	6AF4	6AF4	7DK	6T4 used as alternate
V2	RF Amp.	6BZ7	6BZ7	9AJ	
V3	Mixer - Osc.	6U8	6U8	9AE	
V4	1st. Video IF Amp.	6CB6	6CB6	7CM	
V5	2nd. Video IF Amp.	6CB6	6CB6	7CM	
V6	3rd. Video IF Amp.	6CB6	6CB6	7CM	
V7	Video Output	12BY7	12BY7	9BF	
V8	AGC Keying-Sound IF Amp.	6U8	6U8	9AE	
V9	Audio Detector	6BN6	6BN6	7DF	
V10	Audio Output	6BK5	6BK5	9BQ	
V11	Sync Separator	6CS6	6CS6	7CH	
V12	Sync Phase Inv.-Horiz. AFC	12AU7	12AU7	9A	
V13	Vert. Mult.-AGC Clamper	6BF6	6BF6	7BT	
V14	Vert. Mult-Vert. Output	6V6GT	6V6GT	7S	
V15	Horiz. Mult.	6SN7GTA	6SN7GTA	8BD	
V16	Horiz. Output	6CU6	6CU6	6AM	6BQ6GA used as alternate
V17	Damper	6W4GT	6W4GT	4CG	
V18	HV Rectifier	1B3GT	1B3GT	3C	
V19	LV Rectifier	5U4G	5U4G	5T	

CATHODE-RAY TUBE

ITEM No.	REPLACEMENT DATA: CAPEHART PART No.	CBS PART No.	GENERAL ELECTRIC PART No.	SYLVANIA PART No.	WESTINGHOUSE PART No.	RETMA BASE TYPE	NOTES
V20	21ZP4B ①	21ZP4B ①	21ZP4B ①	21ZP4B ③	21ZP4B ①	12N	① Aluminized
		21ZP4A	21ZP4A	21ZP4A	21ZP4A	12N	② Circuit changes
				21ZP4 ②		12D	necessary
	17LP4		17LP4	17LP4	17LP4	12L	③ Silver screen
				17VP4		12L	
				17LP4A ③		12L	

CAPACITORS

Capacity values given in the rating column are in mfd. for Electrolytic and Paper Capacitors, and in mmfd. for Mica and Ceramic Capacitors.

ITEM No.	RATING: CAP.	RATING: VOLT	REPLACEMENT DATA: CAPEHART PART No.	CENTRALAB PART No.	ERIE PART No.	MALLORY PART No.	PYRAMID PART No.	SANGAMO PART No.	NOTES
C1A	▰50	400	750090B-42				TM-403020-450	Q-017	
B	20	400							
C	■40	400					TD-50-450		
D	▲30	400							
C2A	▰50	400	750090B-41			FP420.56	TM-4129	T-720	
B	■20	200						MT-0225	
C	25	25							
D	▲100	50							
C3	8	250	650228A-13			TC51	TD-8-250	FM-2508	
C4	1000			DD-102	801-001	DC-521			
C5	1000			DD-102	801-001	DC-521			
C6	1000			MFT-1000					
C7	1-4			829-4	3115-01-10	CT551			
C8	1000			MFT-1000					
C9	1			TCZ-1	NP0A-010				
C10	3.3								
C11	1000			DD-102	801-001	DC-521			
C12	1000			MFT-1000					
C13	150			DD-151	GP2K-151	UC-5315			
C14	15								
C15	5-10								
C16	5-10								
C17	18			TCZ-18	NP0K-180				
C18	15			DD-150	GP1K-150	UC-5415			
C19	6.8			TCZ-6R8	NP0A-6R8	ZT-5568			
C20	1000			DD-102	801-001	DC-521			
C21	6.8			TCZ-6R8	NP0A-6R8	ZT-5568			
C22	1000			MFT-1000					
C23	4								
C24	2.7								
C25	1000			DD-102	801-001	DC-521			
C26	1000			MFT-1000					
C27	.3								
C28	.56								
C29	.91								
C30	1000			MFT-1000					
C31	15			DD-150	GP1K-150	UC-5415			
C32	1.2								
C33	1.5			TCZ-1R5	NP0A-1R5	ZT-5515			
C34	10								
C35	10								
C36	1000			DD-102	801-001	DC-521			
C37	1000			MFT-1000					
C38	1000			DD-102	801-001	DC-521			
C39	5								
C40	1000			MFT-1000					
C41	1000			DD-102	801-001	DC-521			
C42	8.2				NP0A-8R2				
C43	22			TCZ-22	NP0K-220	ZT-5422		KR-1422	
C44	1000		450469A-5	DD-102	801-001	DC-521		K-1210	
C45	470		450469A-11	DD-471	831-471	UC-5347		K-1347	
C46	.1	400	2247-1040	DF-104		PT401	IMP4-P1	330401	
C47	1000		450469A-5	DD-102	801-001	DC-521		K-1210	
C48A	470		650858A-1	DD-471	831-471	UC-5347		K-1347	
B	470			DD-471	831-471	UC-5347		K-1347	
C49A	1000		600881A-9	DD2-102	812-001	DCD-521		K-1210	
B	1000							K-1210	
C50	47		650030A-17	TCN-47	N750K-470	NT-5447		KR-1447	Note 1
C51	470	500	2272-21471	D6-471	GP2K-471			K-1347	
C52	470		450469A-11	DD-471	831-471	UC-5347		K-1347	
C53	470		450469A-11	DD-471	831-471	UC-5347		K-1347	

CAPACITORS (cont)

ITEM No.	RATING CAP.	RATING VOLT	CAPEHART PART No.	CENTRALAB PART No.	ERIE PART No.	MALLORY PART No.	PYRAMID PART No.	SANGAMO PART No.	NOTES
C54A	1000		600881A-9	DD2-102	812-001	DCD-521		K-1210	
B	1000							K-1210	
C55	1000		450469A-5	DD-521	801-001	DC-521		K-1210	
C56	1000		450469A-5	DD-521	801-001	DC-521		K-1210	
C57	5000		450469A-12	DD-525	811-005	DC-525		C-1250	
C58	47		650030A-17	TCN-47	N750K-470	NT-5447			
C59	47		650030A-17	TCN-47	N750K-470	NT-5447		KR-1447	
C60	.1	600	2248-1040	DF-104		PT601	IMP6-P1	330601	
C61	.01	200	2246-1030	D6-103	GP2-333-103	PT411	IMP4-S1	330411	
C62	.22	400	2247-2240			PT4022	IMP4-P22	3304022	
C63	.22	400	2247-2240			PT4022	IMP4-P22	3304022	
C64	.22	200	2246-2240			PT4022	IMP2-P22	3302022	
C65	3.3		650030A-5	TCZ-3R3	NP0A-3R3	ZT-5533			
C66	47		650030A-17	TCN-47	N750K-470	NT-5447		KR-1447	
C67	10000		600881A-8	DD-103	811-01	DC-511			
C68	3.3		6500030A-5	TCZ-3R3	NP0A-3R3	ZT-5533			
C69	10000		600881A-8	DD-103	811-01	DC-511			
C70	10000		600881A-8	DD-103	811-01	DC-511			
C71	10000		600881A-8	DD-103	811-01	DC-511			
C72	10		650030A-18	TCA-10					
C73	1000		450469A-7	DD-102	801-001	DC-521	IMP6-D1	K-1210	
C74	10000		600881A-8	DD-103	811-01	DC-511	IMP6-S1	330611	
C75	.01	400	2247-1030	D6-103	GP2-333-103	PT411	IMP4-S1	330411	Note 2
C76	.022	400		DF-203	817-02	PT4122	IMP4-S22	3304122	Note 3
C77	.0033	600		D6-332	GP2-333-332	PT6233	IMP6-D33	3306233	Note 3
C78	27		2271-9022	TCZ-27	NP0L-270			KR-1427	
C79	1500		600881A-5	DD-152	801-0015	DC-5215	IMP6-D15	C-1215	
C80	.1	400	2247-1040	DF-104		PT401	IMP4-P1	330401	
C81	.047	400	2247-4730	DF-503		PT4147	IMP4-S47	3304147	
C82	.001	600	2248-1020	D6-102	GP2L-102	PT621	IMP6-D1	330621	
C83	390	500	2272-23391	D6-391		MCB243		KR-1339	
C84	.033	600	2248-3339	DF-303		PT6133	IMP6-S3	3306133	
C85	.068	200	2246-6839						
C86	.1	600	2248-1040	DF-104		PT601	IMP6-P1	330601	
C87	.01	200	2246-1030	D6-103	GP2-333-103	PT411	IMP4-S1	330411	
C88	.0027	1000	2249-2729						
C89	.022	400	2247-2230	DF-203	817-02	PT4122	IMP4-S22	3304122	
C90	.022	200	2246-2230	DF-203	817-02	PT4122	IMP4-S22	3304122	
C91	.022	200	2246-2230	DF-203	817-02	PT4122	IMP4-S22	3304122	
C92	470	500	2272-21471	D6-471	GP2K-471	MC245		K-1347	
C93	470	500	2272-21471	D6-471	GP2K-471	MC245		K-1347	
C94	470	500	2272-21471	D6-471	GP2K-471	MC245		K-1347	
C95	270	500	2272-21271	D6-271	GP2K-271	MC241		K-1327	
C96	47	500	2272-21470	D6-470	GP2K-470	MC225		K-1447	
C97	.0022	600	2248-2220	D6-222	GP2-333-222	PT6222	IMP6-D22	3306222	
C98	.001	600	2248-1020	D6-102	GP2L-102	PT621	IMP6-D1	330621	
C99	.0022	600	2248-2220	D6-222	GP2-333-222	PT6222	IMP6-D47	3306247	
C100	.022	200	2246-2220	DF-203	817-02	PT4122	IMP4-S22	3304122	
C101	4700	500	2272-43472			MCB465		CR-1247	
C102	100	500	2272-21101	D6-101	NP0-337-101	MCB235		KR-1310	
C103	390	500	2272-23391	D6-391		MCB243		KR-1339	
C104	330	500	2272-21331	D6-331				KR-1333	
C105	470	500	2272-21471	D6-471	GP2K-471	MC245		K-1347	
C106	.047	600	2248-4730	DF-503		PT6147	IMP6-S47	3306147	
C107	.22	400	2247-2240			PT4022	IMP4-P22	3304022	
C108	.1	200	2246-1040	DF-104		PT401	IMP2-P1	330201	
C109	500	20000	650153B-2	TV3-502	413	HV20035A			
C110	.22	400	2247-2240			PT4022	IMP4-P22	3304022	
C111	56	2000		DD30-560	3KV-560	DC30456			
C112A	1500	1000	453521A-4	DD-152	IR5KV-152	DC30215			
B	1500	1000		DD-152	IR5KV-152	DC30215			

Note 1. Not used in chassis coded CX38R-1.
Note 2. Not used when tone control R10 is installed.
Note 3. Not used when tone control R10 is removed.

CONTROLS

ITEM No.	RATING RESISTANCE	RATING WATTS	CAPEHART PART No.	IRC PART No.	CLAROSTAT PART No.	CENTRALAB PART No.	MALLORY PART No.	INSTALLATION NOTES
R1	500KΩ	½	650928A-1					Volume & switch
R2A	15KΩ	½	650927A-1	Q17-118X		ABT-154		Contrast - tapped @ 7KΩ
B	Shaft		Not Req.	NQ		AK-8		Attach to R2A
R3A	200KΩ	½	453328A-3	Q11-129	A47-200K-S	AB-46	U-43	Brightness
B	Shaft		Not Req.	Not Req.	KSS-3	AK-4	Not Req.	Attach to R3A
R4A	100KΩ	½	453328A-2	Q11-128	A47-100K-S	AB-40	U-41	Horiz. Hold
B	Shaft		Not Req.	Not Req.	KSS-3	AK-4	Not Req.	Attach to R4A
R5A	1Meg	½	453466A-1	Q11-137	A47-1Meg-S	AB-69	U-54	Vert. Hold
B	Shaft		Not Req.	Not Req.	KSS-3	AK-4	Not Req.	Attach to R5A
R6	3000Ω with 700Ω stop	1	650642A-3	WK-2500	39-3000-700		R2500L	Vert. Linearity - wire-wound Note 1
R7A	2.5Meg	½	650777A-1	Q11-239	A47-2.5Meg-S	BX-83	SU-565	Picture Lock
B	Shaft		Not Req.	Not Req.	FKS-1/4	Not Req.	Not Req.	Attach to R7A
R8	500Ω	1	650642A-5	W-500	39-500			Noise rejection - wire-wound
R9A	2.5Meg	½	650777A-1	Q11-239	A47-2.5Meg-S	BX-83	SU-565	Height
B	Shaft		Not Req.	Not Req.	FKS-1/4	Not Req.	Not Req.	Attach to R9A
R10	50KΩ	½						Tone - Note 2

Note 1. Add a 680Ω resistor in series with the lead and the terminal of control (omit 680Ω resistor in Clarostat's replacement).
Note 2. Not used in all versions.

PARTS LIST AND DESCR

RESISTOR

ITEM No.	RATING OHMS	RATING WATT	CAPEHART PART No.	IRC PART No.	NOTES
R11	270Ω	½		BTS-270	
R12	10KΩ	½		BTS-10K	
R13	1000Ω	½		BTS-1000	
R14	56Ω	½		BTS-56	
R15	100KΩ	½		BTS-100K	
R16	1Meg 5%	½		BTS-1Meg 5%	
R17	750KΩ 5%	½		BTS-750K 5%	
R18	470Ω	½		BTS-470	
R19	6800Ω	½		BTS-6800	
R20	10KΩ	½		BTS-10K	
R21	470KΩ	½		BTS-470K	
R22	10KΩ	½		BTS-10K	
R23	10KΩ	½		BTS-10K	
R24	100Ω	½		BTS-100	
R25	15KΩ	½		BTS-15K	
R26	220KΩ	½		BTS-220K	
R27	2200Ω	1		BTA-2200	
R28	1500Ω	½		BTS-1500	
R29	150KΩ	½		BTS-150K	
R30	2200Ω	2	3235-222	BTB-2200	
R31	1300Ω	½		BTS-1200	Note 1
R32	47Ω 5%	½	3229-470	BTS-47 5%	
R33	22KΩ	½	3229-223	BTS-22K	
R34	100Ω	½	3230-101	BTS-100	
R35	220KΩ 5%	½	3228-224	BTS-220K 5%	
R36	220KΩ 5%	½	3228-224	BTS-220K 5%	
R37	47Ω	½	3229-470	BTS-47	
R38	22KΩ	½	3229-223	BTS-22K	
R39	100Ω	½	3230-101	BTS-100	
R40	10KΩ	½	3229-103	BTS-10K	Note 2
R41	120Ω	½	3229-121	BTS-120	
R42	15KΩ 5%	½	3228-153	BTS-15K 5%	
R43	4700Ω	½	3229-472	BTS-4700	
R44	39Ω	½	3229-390	BTS-39	
R45	15KΩ	2	3235-153	BTB-15K	Note 3
R46	3900Ω	½	3229-392	BTS-3900	Note 3
R47	3300Ω	2	3235-332	BTB-3300	
R48	3300Ω	2	3235-332	BTB-3300	
R49	2700Ω	½	3229-272	BTS-2700	
R50	2200Ω	½	3229-222	BTS-2200	
R51	220KΩ	½	3228-224	BTS-220K	
R52	100KΩ	½	3229-104	BTS-100K	
R53	39KΩ	½	3229-393	BTS-39K	
R54	10KΩ	½	3229-103	BTS-10K	
R55	10KΩ	½	3229-103	BTS-10K	
R56	470KΩ	½	3229-474	BTS-470K	
R57	560KΩ	½	3229-564	BTS-560K	
R58	1000Ω	½	3230-102	BTS-1000	
R59	24KΩ 5%	½	3228-243	BTS-24K 5%	
R60	15KΩ 5%	½	3228-153	BTS-15K 5%	
R61	27KΩ 5%	½	3228-273	BTS-27K 5%	
R62	2.7Meg	½	3229-275	BTS-2.7Meg	
R63	56KΩ	½	3229-563	BTS-56K	
R64	56KΩ	1	3232-563	BTA-56K	

Note 1. Some versions use a 3300Ω r
Note 2. Not used in chassis coded CX
Note 3. Used in chassis CX-38R-2.
Note 4. Used in chassis CX-38R-1.

TRANSFORMER

ITEM No.	RATING PRI.	RATING SEC. 1	RATING SEC. 2	CAPEHART PART No.	Halldorson PART No.	PA
T1	117VAC @1.62A	600VCT .210ADC	5VAC @ 3A	850300B-3		P
	SEC. 3	SEC. 4	SEC. 5			
	6.3VAC @2.55A	6.3VAC @ 7A				

TRANSFORMERS (SWE

ITEM No.	USE	CAPEHART PART No.	Halldorson PART No.	Merit PART No.	PA
T2	Horiz. Output Trans.	850285E-1 850285D-1①			
T3	Vert. Output Trans.	750354C-2	Z1802	A-3038	20
T4A	Yoke-Horiz. (14MH)	850221C-2	DF602 ③	MDF-72③	21
B	Vert. (39MH)				
T5A	Width Coil (.12-1.2MH)	650589B-1			
B	AGC Winding (7.5-30MH)				

① Alternate horizontal output transformer.
② Drill new mounting hole(s).
③ Connect horizontal damping network across terminals #1 and #2, us
④ Remove damping capacitor from terminals #3 and #7. Use original

PARTS LIST AND DESCRIPTIONS (Continued)

RESISTORS

ITEM No.	RATING OHMS	RATING WATT	REPLACEMENT DATA CAPEHART PART No.	REPLACEMENT DATA IRC PART No.	NOTES
R11	270Ω	½		BTS-270	
R12	10KΩ	½		BTS-10K	
R13	1000Ω	½		BTS-1000	
R14	56Ω	½		BTS-56	
R15	100KΩ	½		BTS-100K	
R16	1Meg 5%	½		BTS-1Meg 5%	
R17	750KΩ 5%	½		BTS-750K 5%	
R18	470Ω	½		BTS-470	
R19	6800Ω	½		BTS-6800	
R20	10KΩ	½		BTS-10K	
R21	470KΩ	½		BTS-470K	
R22	10KΩ	½		BTS-10K	
R23	10KΩ	½		BTS-10K	
R24	100Ω	½		BTS-100	
R25	15KΩ	½		BTS-15K	
R26	220KΩ	½		BTS-220K	
R27	2200Ω	1		BTA-2200	
R28	1500Ω	½		BTS-1500	
R29	150KΩ	½		BTS-150K	
R30	2200Ω	2	3235-222	BTB-2200	
R31	1300Ω	½		BTS-1200	Note 1
R32	47Ω 5%	½	3229-470	BTS-47 5%	
R33	22KΩ	½	3229-223	BTS-22K	
R34	100Ω	½	3230-101	BTS-100	
R35	220KΩ 5%	½	3228-224	BTS-220K 5%	
R36	220KΩ 5%	½	3228-224	BTS-220K 5%	
R37	47Ω	½	3229-470	BTS-47	
R38	22KΩ	½	3229-223	BTS-22K	
R39	100Ω	½	3230-101	BTS-100	
R40	10KΩ	½	3229-103	BTS-10K	Note 2
R41	120Ω	½	3229-121	BTS-120	
R42	15KΩ 5%	½	3228-153	BTS-15K 5%	
R43	4700Ω	½	3229-472	BTS-4700	
R44	39Ω	½	3229-390	BTS-39	
R45	15KΩ	2	3235-153	BTB-15K	Note 3
R46	3900Ω	½	3229-392	BTS-3900	Note 3
R47	3300Ω	2	3235-332	BTB-3300	
R48	3300Ω	2	3235-332	BTB-3300	
R49	2700Ω	½	3229-272	BTS-2700	
R50	2200Ω	½	3229-222	BTS-2200	
R51	220KΩ	½	3228-224	BTS-220K	
R52	100KΩ	½	3229-104	BTS-100K	
R53	39KΩ	½	3229-393	BTS-39K	
R54	10KΩ	½	3229-103	BTS-10K	
R55	10KΩ	½	3229-103	BTS-10K	
R56	470KΩ	½	3229-474	BTS-470K	
R57	560KΩ	½	3229-564	BTS-560K	
R58	1000Ω	½	3230-102	BTS-1000	
R59	24KΩ 5%	½	3228-243	BTS-24K 5%	
R60	15KΩ 5%	½	3228-153	BTS-15K 5%	
R61	27KΩ 5%	½	3228-273	BTS-27K 5%	
R62	2.7Meg	½	3229-275	BTS-2.7Meg	
R63	56KΩ	½	3229-563	BTS-56K	
R64	56KΩ	1	3232-563	BTA-56K	
R65	150Ω	½	3229-151	BTS-150	
R66	22KΩ	1	3232-223	BTA-22K	
R67	680Ω	½	3229-681	BTS-680	
R68	330KΩ	½	3229-334	BTS-330	
R69	220Ω	½	3229-221	BTS-220	
R70	470KΩ	½	3229-474	BTS-470K	
R71	22KΩ	1	3232-223	BTA-22K	
R72	5.6Meg	½	3229-565	BTS-5.6Meg	
R73	560KΩ	½	3229-564	BTS-560K	
R74	220KΩ	½	3228-224	BTS-220K	
R75	2.2Meg	½	3229-225	BTS-2.2Meg	
R76	3900Ω	½	3229-392	BTS-3900	
R77	10KΩ	½	3229-103	BTS-10K	
R78	3900Ω	½	3229-392	BTS-3900	
R79	22KΩ	½	3229-223	BTS-22K	
R80	470KΩ	½	3229-474	BTS-470K	
R81	820KΩ	½	3229-824	BTS-820K	
R82	100KΩ	½	3229-104	BTS-100K	
R83	56KΩ	½	3229-563	BTS-56K	
R84	12KΩ	½	3229-123	BTS-12K	
R85	120KΩ	½	3229-124	BTS-120K	
R86	10KΩ	½	3229-103	BTS-10K	
R87	2.2Meg	½	3229-225	BTS-2.2Meg	
R88	33KΩ	½	3229-333	BTS-33K	
R89	56KΩ	1	3232-563	BTA-56K	
R90	560Ω	½		BTS-560	
R91	560 Ω	½		BTS-560	
R92	82KΩ	½	3229-823	BTS-82K	
R93	82KΩ	½	3229-823	BTS-82K	
R94	100KΩ	½	3229-104	BTS-100K	
R95	22KΩ	½	3229-223	BTS-22K	
R96	82KΩ	1	3232-823	BTA-82K	
R97	2.2Meg	½	3229-225	BTS-2.2Meg	
R98	1200Ω	½	3229-122	BTS-1200	
R99	8200Ω	1	3232-822	BTA-8200	
R100	47KΩ	½		BTS-47K	
R101	120KΩ	½	3229-124	BTS-120K	
R102	10KΩ	½	3229-103	BTS-10K	
R103	1Meg	½	3229-105	BTS-1Meg	
R104	47Ω	½	3229-470	BTS-47	
R105	12KΩ	2	3235-123	BTB-12K	
R106	180Ω	4	650101A-25		
R107	2200Ω	½		BTS-2200	
R108	470Ω	½	3230-471	BTS-470	
R109	6.8Ω	½	650101A-22		
R110	1Meg	1	453477A-1	BTA-1Meg	
R111	470Ω	1	3232-471	BTA-470	
R112	150Ω	2	3235-151		
R113	270Ω	2	3235-271		
R114	100KΩ	½	3229-104	BTS-100K	
R115	180KΩ	½	3229-184	BTS-180K	
R116	330KΩ	½	3229-334	BTS-330K	
R117	33KΩ	1	3232-333	BTA-33K	Note 4
R118	33KΩ	2	3235-333	BTB-33K	Note 4

Note 1. Some versions use a 3300Ω resistor in this application.
Note 2. Not used in chassis coded CX-38R-1.
Note 3. Used in chassis CX-38R-2.
Note 4. Used in chassis CX-38R-1.

TRANSFORMER (POWER)

ITEM No.	RATING PRI.	RATING SEC. 1	RATING SEC. 2	RATING SEC. 3	RATING SEC. 4	RATING SEC. 5	REPLACEMENT DATA CAPEHART PART No.	Halldorson PART No.	Merit PART No.	RCA TYPE No.	Stancor PART No.	Thordarson PART No.	Triad PART No.
T1	117VAC @1.62A	600VCT .210ADC	5VAC @ 3A	6.3VAC @2.55A	6.3VAC @ 7A		850300B-3		P-3055		P-8331		

TRANSFORMERS (SWEEP CIRCUITS)

ITEM No.	USE	REPLACEMENT DATA CAPEHART PART No.	Halldorson PART No.	Merit PART No.	RCA PART No.	Ram PART No.	Stancor TYPE No.	Thordarson PART No.	Triad PART No.
T2	Horiz. Output Trans.	850285E-1 850285D-1①				X099 *			
T3	Vert. Output Trans.	750354C-2	Z1802	A-3038	204T2 ②	V305	A-8143	26S53	A-99X
T4A	Yoke-Horiz. (14MH)	850221C-2	DF602 ③	MDF-72③	211D2 ③	Y70F14/43 ③	DY-9A④	Y-7 ③	Y-17-1 ③
B	Vert. (39MH)								
T5A	Width Coil (.12-1.2MH)	650589B-1						WC-20	
B	AGC Winding (7.5-30MH)								

① Alternate horizontal output transformer.
② Drill new mounting hole(s).
③ Connect horizontal damping network across terminals #1 and #2, use original network if necessary.
④ Remove damping capacitor from terminals #3 and #7. Use original horizontal network if necessary.

SANGAMO PART No.	NOTES
-1210	
-1210	
-1210	
-1210	
-1250	
R-1447	
30601	
3041l	
304022	
304022	
302022	
R-1447	
-1210	
3061l	
3041l	Note 2
304122	Note 3
306233	Note 3
R-1427	
-1215	
30401	
304147	
30621	
R-1339	
306133	
30601	
3041l	
04122	
04122	
04122	
-1347	
-1347	
-1347	
-1327	
-1447	
06222	
0621	
06247	
04122	
R-1247	
R-1310	
R-1339	
R-1333	
1347	
06147	
04022	
0201	
04022	

INSTALLATION NOTES
Volume & switch
Contrast - tapped @ 7KΩ
Attach to R2A
Brightness
Attach to R3A
Horiz. Hold
Attach to R4A
Vert. Hold
Attach to R5A
Vert. Linearity - wire-wound
Note 1
Picture Lock
Attach to R7A
Noise rejection - wire-wound
Height
Attach to R9A
Tone - Note 2

***HORIZONT**

Use

	ORIGINAL TERMINAL CONNECTIONS	Halldorson Replacement Connections	R
	3		
	2		
	1		
	7		
	4		
	5		
	6		
Connect Width Coil Across →	5 & 6		

TRAN

ITEM No.	IMPEDANCE PRI.	IMPEDANCE SEC.	CAPEHART PART No.	Halld PART
T6	8KΩ	3.7Ω	650216A-3	Z100

ITEM No.	RATINGS SIZE	RATINGS FIELD	RATINGS V. C. IMP.	RE CAPE PART
SP1	4"	PM	3.7Ω	75045

ITEM No.	USE	DC RES. PRI.	DC RES. SEC.	
L1	UHF Ant. Coupling Coil	0Ω		
L2	UHF Ant. Coupling Coil	0Ω		
L3	UHF RF Coil	0Ω		
L4	Fil. Choke	0Ω		
L5	Fil. Choke	0Ω		
L6	Cathode Choke	0Ω		
L7	UHF IF Coil	0Ω		
L8	VHF Ant. Coupling Coil	.5Ω	.5Ω	
L9	VHF Ant. Coupling Coil	.5Ω		
L10	IF Trap	.2Ω		
L11	Trap Coil	0Ω		
L12	IF Trap	.2Ω		
L13	UHF IF Coil	1.5Ω		
L14	VHF Ant. Coils	0Ω		
L15	VHF Ant. Coil	0Ω		
L16	UHF IF Coil	0Ω		
L17	Fil. Choke	0Ω		
L18	Neut. Coil	0Ω		
L19	VHF RF Coil	0Ω		
L20	VHF RF Coils	0Ω		
L21	UHF IF Coil	0Ω		
L22	VHF Mixer, Grid Coil	0Ω		
L23	VHF Mixer Grid Coils	0Ω		
L24	UHF IF Coil	0Ω		
L25	RF Coil	0Ω		
L26	Fil. Choke	0Ω		
L27	VHF Osc. Coils	0Ω		
L28	VHF Osc. Coil	0Ω		
L29	VHF Osc. Coil	0Ω		
L30	RF Coil	1.4Ω		
L31	Feedback Coil	0Ω		
L32	Conv. Plate	.1Ω	0Ω	
L33	39.75MC Trap	0Ω		65
L34	1st. Video IF	.1Ω		75
L35	2nd. Video IF	.1Ω	.2Ω	75
L36	3rd. Video IF	.1Ω	.1Ω	75
L37	RF Choke	1.8Ω		45
L38	RF Choke	1.8Ω		45
L39	Series Peaking Coil	11Ω		75
L40	Series Peaking Coil	8.2Ω		45
L41A	4.5MC Trap	1.9Ω		
B	Sound IF	3.1Ω		65
L42	Series Peaking Coil	4.4Ω		75

IPTIONS (Continued)

S

EM o.	RATING OHMS	RATING WATT	REPLACEMENT DATA CAPEHART PART No.	REPLACEMENT DATA IRC PART No.	NOTES
5	150Ω	½	3229-151	BTS-150	
3	22KΩ	1	3232-223	BTA-22K	
7	680Ω	½	3229-681	BTS-680	
3	330KΩ	½	3229-334	BTS-330	
9	220Ω	½	3229-221	BTS-220	
0	470KΩ	½	3229-474	BTS-470K	
	22KΩ	1	3232-223	BTA-22K	
2	5.6Meg	½	3229-565	BTS-5.6Meg	
3	560KΩ	½	3229-564	BTS-560K	
4	220KΩ	½	3228-224	BTS-220K	
5	2.2Meg	½	3229-225	BTS-2.2Meg	
3	3900Ω	½	3229-392	BTS-3900	
7	10KΩ	½	3229-103	BTS-10K	
3	3900Ω	½	3229-392	BTS-3900	
9	22KΩ	½	3229-223	BTS-22K	
0	470KΩ	½	3229-474	BTS-470K	
	820KΩ	½	3229-824	BTS-820K	
2	100KΩ	½	3229-104	BTS-100K	
3	56KΩ	½	3229-563	BTS-56K	
4	12KΩ	½	3229-123	BTS-12K	
5	120KΩ	½	3229-124	BTS-120K	
6	10KΩ	½	3229-103	BTS-10K	
7	2.2Meg	½	3229-225	BTS-2.2Meg	
8	33KΩ	½	3229-333	BTS-33K	
9	56KΩ	1	3232-563	BTA-56K	
0	560Ω	½		BTS-560	
1	560 Ω	½		BTS-560	
2	82KΩ	½	3229-823	BTS-82K	
3	82KΩ	½	3229-823	BTS-82K	
4	100KΩ	½	3229-104	BTS-100K	
5	22KΩ	½	3229-223	BTS-22K	
6	82KΩ	1	3232-823	BTA-82K	
7	2.2Meg	½	3229-225	BTS-2.2Meg	
8	1200Ω	½	3229-122	BTS-1200	
9	8200Ω	1	3232-822	BTA-8200	
0	47KΩ	½		BTS-47K	
1	120KΩ	½	3229-124	BTS-120K	
2	10KΩ	½	3229-103	BTS-10K	
3	1Meg	½	3229-105	BTS-1Meg	
4	47Ω	½	3229-470	BTS-47	
5	12KΩ	2	3235-123	BTB-12K	
6	180Ω	4	65010IA-25		
7	2200Ω	½		BTS-2200	
8	470Ω	½	3230-471	BTS-470	
9	6.8Ω	½	65010IA-22		
0	1Meg	1	453477A-1	BTA-1Meg	
1	470Ω	1	3232-471	BTA-470	
2	150Ω	2	3235-151		
3	270Ω	2	3235-271		
4	100KΩ	½	3229-104	BTS-100K	
5	180KΩ	½	3229-184	BTS-180K	
6	330KΩ	½	3229-334	BTS-330K	
7	33KΩ	1	3232-333	BTA-33K	Note 4
8	33KΩ	2	3235-333	BTB-33K	Note 4

esistor in this application.
X-38R-1.

(POWER)

REPLACEMENT DATA Merit ART No.	RCA TYPE No.	Stancor PART No.	Thordarson PART No.	Triad PART No.
-3055		P-8331		

EP CIRCUITS)

PLACEMENT DATA RCA ART No.	Ram PART No.	Stancor TYPE No.	Thordarson PART No.	Triad PART No.
	X099 *			
94T2 ② 1D2 ③	V305 Y70F14/43 ③	A-8143 DY-9A④	26S53 Y-7 ③ WC-20	A-99X Y-17-1 ③

se original network if necessary.
horizontal network if necessary.

*HORIZONTAL OUTPUT TRANSFORMER CONNECTION DATA

Use Original Width Coil Unless Replacement Type Is Listed

	ORIGINAL TERMINAL CONNECTIONS	Halldorson Replacement Connections	Merit Replacement Connections	RCA Replacement Connections	Ram Replacement Connections	Stancor Replacement Connections	Thordarson Replacement Connections	Triad Replacement Connections
	3				3			
	2				2			
	1				1			
	7				7			
	4				4			
	5				5			
	6				6			
Connect Width Coil Across →	5 & 6				5 & 6			

TRANSFORMER (AUDIO OUTPUT)

ITEM No.	IMPEDANCE PRI.	IMPEDANCE SEC.	REPLACEMENT DATA CAPEHART PART No.	Halldorson PART No.	Merit PART No.	Stancor PART No.	Thordarson PART No.	Triad PART No.	NOTES
T6	8KΩ	3.7Ω	650216A-3	Z1002	A-3020	A-3849	26S48	S-9Z	

SPEAKER

ITEM No.	RATINGS SIZE	RATINGS FIELD	RATINGS V. C. IMP.	REPLACEMENT DATA CAPEHART PART No.	REPLACEMENT DATA QUAM PART No.	NOTES
SP1	4"	PM	3.7Ω	750457A-2	4A1	

COILS (RF-IF)

ITEM No.	USE	DC RES. PRI.	DC RES. SEC.	REPLACEMENT DATA CAPEHART PART No.	MEISSNER PART No.	MERIT PART No.	MILLER PART No.	NOTES
L1	UHF Ant. Coupling Coil	0Ω						
L2	UHF Ant. Coupling Coil	0Ω						
L3	UHF RF Coil	0Ω						
L4	Fil. Choke	0Ω						
L5	Fil. Choke	0Ω						
L6	Cathode Choke	0Ω						
L7	UHF IF Coil	0Ω						
L8	VHF Ant. Coupling Coil	.5Ω	.5Ω					
L9	VHF Ant. Coupling Coil	.5Ω						
L10	IF Trap	.2Ω						
L11	Trap Coil	0Ω						
L12	IF Trap	.2Ω						
L13	UHF IF Coil	1.5Ω						
L14	VHF Ant. Coils	0Ω						
L15	VHF Ant. Coil	0Ω						Channel 13
L16	UHF IF Coil	0Ω						
L17	Fil. Choke	0Ω						
L18	Neut. Coil	0Ω						
L19	VHF RF Coil	0Ω						Channel 13
L20	VHF RF Coils	0Ω						
L21	UHF IF Coil	0Ω						
L22	VHF Mixer, Grid Coil	0Ω						Channel 13
L23	VHF Mixer Grid Coils	0Ω						
L24	UHF IF Coil	0Ω						
L25	RF Coil	0Ω						
L26	Fil. Choke	0Ω						
L27	VHF Osc. Coils	0Ω						
L28	VHF Osc. Coil	0Ω						Channel 6
L29	VHF Osc. Coil	0Ω						Channel 13
L30	RF Coil	1.4Ω						
L31	Feedback Coil	0Ω						
L32	Conv. Plate	.1Ω	0Ω					
L33	39.75MC Trap	0Ω		650948A-1			6225	
L34	1st. Video IF	.1Ω		750460C-1	17-5003 *	TV-128 *	6233 *	Includes 47.25MC trap
L35	2nd. Video IF	.1Ω	.2Ω	750462D-1	17-5002 *	TV-127 *	6232 *	Includes 41.25MC trap
L36	3rd. Video IF	.1Ω	.1Ω	750461D-1	17-4521 ■	TV-128 *	6233 *	Includes 47.25MC trap
L37	RF Choke	1.8Ω		450338A-4	19-1002		4606	2.2 Microhenries, IRC part #CLA
L38	RF Choke	1.8Ω		450338A-4	19-1002		4606	2.2 Microhenries, IRC part #CLA
L39	Series Peaking Coil	11Ω		750597A-1	19-3160	TV-184	6180	150 Microhenries
L40	Series Peaking Coil	8.2Ω		450338A-5	19-1005		4612	10 Microhenries, IRC part #CL-1
L41A	4.5MC Trap	1.9Ω						
B	Sound IF	3.1Ω		650929A-1				
L42	Series Peaking Coil	4.4Ω		750597A-2	19-3125		6153	140 Microhenres wound on 5600Ω resistor

PARTS LIST AND DESCRIPTIONS (Continued)

COILS (cont)

ITEM No.	USE	DC RES. PRI.	DC RES. SEC.	REPLACEMENT DATA CAPEHART PART No.	MEISSNER PART No.	MERIT PART No.	MILLER PART No.	NOTES
L43	Shunt Peaking Coil	5.5Ω		750597A-4	19-4201	TV-184	6154	200 Microhenries
L44	Series Peaking Coil	3.6Ω		750597A-3	19-3100 ▲	TV-181 ▲	6177 ▲	100 Microhenries, wound on 2200Ω resistor
L45	2nd. Sound IF	2.7Ω		650638B-1				Tapped @ 1Ω, .6Ω
L46	Quadrature Coil	6.8Ω		650776A-1	20-1005	TV-151	1480	
L47	Horiz. Osc.	55Ω		650637B-1	19-1576	TV-163	6210	

* Use adaptor plate and drill mounting holes.
■ Drill mounting holes.
▲ Parallel with 2.2KΩ resistor.

FILTER CHOKE

ITEM No.	RATINGS TOTAL DIRECT CURRENT	RATINGS D. C. RESISTANCE	RATINGS INDUCTANCE (0 CURRENT 1000 ∿)	REPLACEMENT DATA CAPEHART PART No.	Halldorson PART No.	Merit PART No.	Stancor PART No.	Thordarson PART No.	Triad PART No.
L48	.210ADC	56Ω	1 HY	650215A-5	C5040	C-2994	C-2327	26C41	C-21X ①

① Drill one new mounting hole.

FUSES

ITEM No.	TYPE	RATING	REPLACEMENT DATA CAPEHART PART No. FUSE	CAPEHART PART No. HOLDER	LITTELFUSE PART No. FUSE	LITTELFUSE PART No. HOLDER	BUSS PART No. FUSE	BUSS PART No. HOLDER
M1	3AG S/B	½A 125V			313.500 (3AG S/B-½A)	357001	MDL½	4405
M2	3AG S/B P/T	2/10A 125V			315.200(3AG S/B P/T 2/10A)		MDV 2/10	
M3	3/4" #26 Wire							

CRYSTAL DIODES

ITEM No.	ORIG. TYPE	REPLACEMENT DATA CAPEHART PART No.	SYLVANIA PART No.	NOTES
M4	ST-47 *		1N82 or 1N82A	UHF Mixer
M5	1N64		1N60 or 1N132	Video Detector

* Some versions may use 1N82 crystal diode in this application.

MISCELLANEOUS

ITEM No.	PART NAME	CAPEHART PART No.	NOTES
M6	Dial Light		#47
M7	Tuner	850330A-1	VHF - All models
M8	Tuner	750593A-1	UHF - Used in models with suffix -5. Models with suffix -5 combine VHF tuner and UHF tuner under Part #750594A-G1
M9	Video Det. Assy.	750468D-1	Includes M5, L39, coils and capacitors.
M10	Switch	452729A-1	AGC differential
M11	Integrator	453214A-1	Vertical
M12	Focus Magnet	850291A-1	Includes centering device
M13	Ion Trap	650276A-5	
B2	Trimmer Cap.	450527B-1	Horiz. Drive (40-450MMF)
	Knob	750596B-G1	On-off-volume - Models 2T215MSD-4, 7C215MA-4, 7C215M-4, 9C215MD-4, 14F215M-4, 14F215B-4, 18C215M-4
	Knob	650891B-G1	On-off-volume - Models 2T215MSD-5, 3T215MD-5, 3T215BD-5, 7C215MA-5, 7C215M-5, 8C215MD-5, 9C215MD-5, 12F215MD-5, 14F215M-5, 14F215B-5, 18C215M-5, 1T17ES-5, 2T215BSD-5, 2T215ES-5, 7C215BA-5, 7C215B-5, 8C215BD-5, 9C215BD-5, 12F215BD-5, 18C215B-5, 3T215MD-4, 3T215BD-4, 8C215MD-4, 12F215MD-4, 8C215BD-4, 12F215BD-4
	Knob	750596B-G3	On-off-volume - Models 1T175ES-4, 2T215BSD-4, 2T215ES-4, 7C215BA-4, 7C215B-4, 9C215BD-4, 18C215B-4
	Knob	453908A-1	VHF Fine tuning - All models
	Knob	650958B-G1	VHF channel selector - Models 2T215MSD-4, 7C215MA-4, 7C215M-4, 9C215MD-4, 14F215M-4, 14F215B-4, 18C215M-4
	Knob	650955B-G1	VHF channel selector - Models 2T215MSD-5, 3T215MD-5, 3T215BD-5, 7C215MA-5, 7C215M-5, 8C215MD-5, 9C215MD-5, 12F215MD-5, 14F215M-5, 14F215B-5, 18C215M-5
	Knob	650958B-G3	VHF channel selector - Models 1T175ES-4, 2T215BSD-4, 2T215ES-4, 7C215BA-4, 7C215B-4, 9C215BD-4, 18C215B-4
	Knob	650955B-G1	VHF Channel selector - Models 1T175ES-5, 2T215BSD-5, 2T215ES-5, 7C215BA-5, 7C215B-5, 8C215BD-5, 9C215BD-5, 12F215BD-5, 18C215B-5
	Knob	650958B-G5	VHF channel selector - Models 3T215MD-4, 3T215BD-4, 8C215MD-4, 12F215MD-4, 8C215BD-4, 12F215BD-4
	Knob	750564A-1	Contrast - Models 2T215MSD-4, 7C215MA-4, 7C215M-4, 9C215MD-4, 14F215M-4, 14F215B-4, 18C215M-4
	Knob	750564A-2	Contrast- Models 2T215MSD-5, 3T215MD-5, 3T215BD-5, 7C215MA-5, 7C215M-5, 8C215MD-5, 9C215MD-5, 12F215MD-5, 14F215M-5, 14F215B-5, 18C215M-5, 1T175ES-5, 2T215BSD-5, 2T215ES-5, 7C215BA-5, 7C215B-5, 8C215BD-5, 9C215BD-5, 12F215BD-5, 18C215B-5, 3T215MD-4, 3T215BD-4, 8C215MD-4, 12F215MD-4, 8C215BD-4, 12F215BD-4
	Knob	750564A-3	Contrast - Models 1T175ES-4, 2T215BSD-4, 2T215ES-4, 7C215BA-4, 7C215B-4, 9C215BD-4, 18C215B-4
	Knob	650827A-2	Brightness, Horiz. Hold & Vert. Hold - Models 2T215MSD-4, 7C215MA-4, 7C215M-4, 9C215MD-4, 14F215M-4, 14F215B-4, 18C215M-4, 3T215MD-4, 3T215BD-4, 8C215MD-4, 12F215MD-4, 8C215BD-4, 12F215BD-4
	Knob	850827A-2	Brightness, Horiz. Hold & Vert. Hold - Models 2T215MSD-5, 3T215MD-5, 3T215BD-5, 7C215MA-5, 7C215M-5, 8C215MD-5, 9C215MD-5, 12F215MD-5, 14F215M-5, 14F215B-5, 18C215M-5,

PARTS LIST AND DESCRIPTIONS (Continued)

MISCELLANEOUS (cont)

ITEM No.	PART NAME	CAPEHART PART No.	NOTES
	Knob	650827A-1	Brightness, Horiz. Hold & Vert. Hold - Models 1T175ES-4, 2T215BSD-4, 2T215ES-4, 7C215BA-4, 7C215B-4, 9C215BD-4, 18C215B-4, 1T175ES-5, 2T215BSD-5, 2T215ES-5, 7C215BA-5, 7C215B-5, 8C215BD-5, 9C215BD-5, 12F215BD-5, 18C215B-5
	Knob	750565A-1	UHF Tuning - Models 2T215MSD-5, 3T215MD-5, 3T215BD-5, 7C215MA-5, 7C215M-5, 8C215MD-5, 9C215MD-5, 12F215MD-5, 14F215M-5, 14F215B-5, 18C215M-5, 1T175ES-5, 2T215BSD-5, 2T215ES-5, 7C215BA-5, 7C215B-5, 8C215BD-5, 9C215BD-5, 12F215BD-5, 18C215B-5
	UHF Dial	650959A-1	Models 2T215MSD-5, 3T215MD-5, 3T215BD-5, 7C215MA-5, 7C215M-5, 8C215MD-5, 9C215MD-5, 12F215MD-5, 14F215M-5, 14F215B-5, 18C215M-5, 1T175ES-5, 2T215BSD-5, 2T215ES-5, 7C215BA-5, 7C215B-5, 8C215BD-5, 9C215BD-5, 12F215BD-5, 18C215B-5
	Safety Glass	850223A-10	Models 1T17ES-4, 1T175ES-5
	Safety Glass	850223A-8	Models 2T215MSD-4, 2T215MSD-5, 2T215BSD-4, 2T215BSD-5, 3T215MD-4, 3T215MD-5, 3T215BD-4, 3T215BD-5, 8C215MD-4, 8C215MD-5, 8C215BD-4, 8C215BD-5, 9C215MD-4, 9C215MD-5, 9C215BD-4, 9C215BD-5, 12F215MD-4, 12F215MD-5, 12F215BD-4, 12F215BD-5
	Safety Glass	850223A-11	Models 2T215ES-4, 2T215ES-5, 7C215MA-4, 7C215MA-5, 7C215BA-4, 7C215BA-5, 7C215M-4, 7C215M-5, 7C215B-4, 7C215B-5, 14F215M-4, 14F215M-5, 14F215B-4, 14F215B-5, 18C215M-4, 18C215M-5, 18C215B-4, 18C215B-5
	Mask	650676AG-5	Models 1T175ES-4, 1T175ES-5
	Mask	950252A-2	Models 2T215MSD-4, 2T215MSD-5, 2T215BSD-4, 2T215BSD-5, 3T215MD-4, 3T215MD-5, 3T215BD-4, 3T215BD-5, 7C215BA-4, 7C215BA-5, 7C215B-4, 7C215B-5, 8C215MD-4, 8C215MD-5, 8C215BD-4, 8C215BD-5, 9C215MD-4, 9C215MD-5, 9C215BD-4, 9C215BD-5, 12F215MD-4, 12F215MD-5, 12F215BD-4, 12F215BD-5
	Mask	650676A-4	Models 2T215ES-4, 2T215ES-5
	Mask	650676A-G6	Models 7C215MA-4, 7C215MA-5
	Mask	650676AG-7	Models 7C215M-4, 7C215M-5
	Mask	950252A-1	Models 14F215M-4, 14F215M-5, 14F215B-4, 14F215B-5, 18C215M-4, 18C215M-5, 18C215B-4, 18C215B-5

PRODUCTION CHANGES

A system has been established for the handling of production changes for these chassis.

The initial production is coded "CX-38, R1". Subsequent changes are coded "R-2", "R-3", etc.

Listed below are the changes covering "R-2".

TO ELIMINATE "BLOCKING" IN THE 3rd VIDEO IF AMPLIFIER

R40 (10KΩ, ½ watt) was added from L36 to the junction of L37, R41 and C52.

C50 (47MMF, tubular ceramic) was added in parallel with R40.

TO ELIMINATE "BLOCKING" IN THE VIDEO AMPLIFIER

R45 (15KΩ, 2 watt) was added from pin 8 of V7 to the 300V line. R117 (33KΩ, 1 watt) which formerly connected to pin 8 of V7 was deleted.

R46 (3.9KΩ, ½ watt) was added from pin 8 of V7 to 135V line. R118 (33KΩ, 2 watt) which formerly connected from the 135V line to the 300V line was deleted.

SERVICING IN THE FIELD

TUNER OSCILLATOR ADJUSTMENTS

For touch-up adjustment of VHF tuner oscillator adjustments, it is necessary to remove the chassis from the cabinet. (See disassembly instructions).

PICTURE TUBE SAFETY GLASS CLEANING

To clean safety glass remove 4 wood screws holding metal strip at the top of the safety glass. Remove metal strip and safety glass. Use extreme caution when removing safety glass.

PICTURE TUBE REMOVAL

For picture tube removal it is necessary to remove chassis. (See disassembly instructions).

SERVICE ADJUSTMENT LOCATION

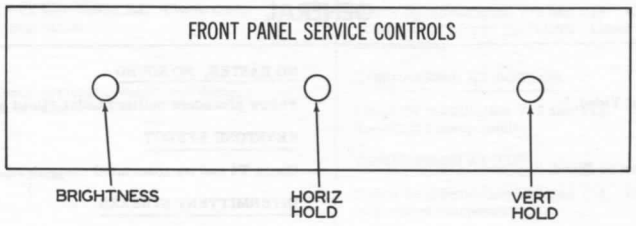

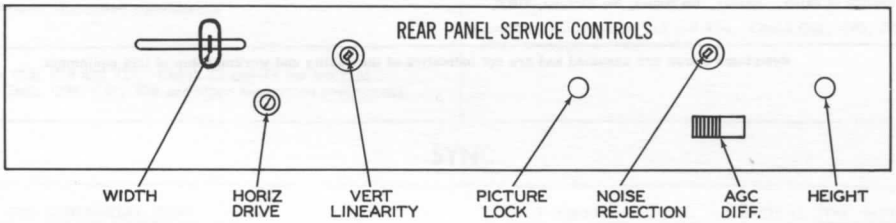

SPECIAL ADJUSTMENTS - PICTURE LOCK ADJUSTMENT

Adjustment of the picture lock control is located on the rear panel of the chassis. Tune in a TV station, preferably strongest in that area.

Rotate the picture lock control (R7) to its maximum clockwise position. While observing the picture rotate R7 slowly counter clockwise until picture starts to shift to the left. Rotate R7 back clockwise to the position just prior to the point where picture starts to shift left. In extreme noisy and weak signal areas, adjustment of R7 should be made along with other sync adjustments for stable horizontal and vertical sync.

HORIZONTAL OSCILLATOR FIELD ADJUSTMENT

Remove the rear cover and supply power to the set. Set the horizontal hold control to the center of its range and adjust the horizontal oscillator coil (L47) until the picture synchronizes horizontally.

SOUND IF DETECTOR BUZZ ADJUSTMENT

To eliminate sound IF detector buzz, adjust the noise rejection control (R8) located on rear panel of the chassis for minimum buzz and maximum volume.

FUSES

Three fuses are used. One for horizontal sweep circuit protection, one for LV power supply protection and the other for filament supply protection. (For location see tube placement chart).

CENTERING

Centering is accomplished mechanically by means of a centering lever on the PM focusing assembly. Adjust the centering lever from side to side, and up and down until the picture is properly centered.

DISASSEMBLY INSTRUCTIONS

CHASSIS REMOVAL

1. Remove 4 push-on type control knobs from front panel of cabinet.
2. Remove 3 push-on type control knobs from under control door.
3. Remove 7 wood screws. Remove rear cover.
4. Disconnect speaker plug.
5. Remove 2 nuts from picture tube support rods.
6. Loosen 2 wood screws. Remove antenna bracket.
7. Remove 4 chassis bolts. Remove chassis.
8. Remove 2 speaker nuts. Remove speaker.