ALLEN B. DU MONT LABORATORIES, INC.

TELESET SERVICE BULLETIN

TELESET SERVICE CONTROL DEPARTMENT

MARKET STREET • EAST PATERSON, N. J.

October 14, 1949

TO: DISTRIBUTORS, SERVICING DEALERS AND SERVICE ORGANIZATIONS

RE-ORGANIZATION OF SERVICE NOTES

The method formerly used to supply service notes to the field in the form of bulletins has been discontinued.

In the future all service notes will be supplied in single sheets instead of in bulletin form. The purpose of this change is to permit segregation of service information into various sections. This new system divides the service information into the following sections:

1. General
2. Spare Parts
3. Installation
4. RA-101
5. RA-102
6. RA-103C
7. RA-103D, RA-104A, RA-110A
8. RA-105A, RA-106A
9. RA-105B, RA-108A

As it becomes necessary, additional sections will be added. Each section will have its own sequence of page numbers and also an index. We welcome contributions from servicemen in the field and will give full credit to the author for any material used.

If you have not already purchased the Service Binder, as described on page G-9, we highly recommend that you do so. It is the ideal way to keep these notes, manuals, etc., for ready reference.

E. W. Merriam

E. W. Merriam, Manager
Teleset Service Control Dept.

823-M20-1-49

Index General Section

1/13/50

GENERAL INFORMATION

MAINTENANCE OF DU MONT TELESETS IN PUBLIC PLACES

DEALERS PLEASE NOTE

From time to time complaints reach top management in Du Mont, of improper operation of Du Mont Telesets which have been installed in public places such as clubs, bars, restaurants, fire houses and hotels.

Many of these cases investigated show very little wrong with either the set or the installation and a simple adjustment is sometimes all that is required to restore the set to perfect operating condition. In other cases, the installation itself is inadequate to provide proper operation due to the location or other reasons.

Periodically, dealers and service organizations have been cautioned to make every effort to insure that all installations are properly made and that set owners are instructed in the proper use of their sets. The most important types of installation, however, from an advertising standpoint, good or bad, are those located in the types of public places mentioned above. Thousands of persons view these receivers in a comparatively short period of time and their impression of the particular set which they view unconsciously creates a lasting prejudice for or against the manufacturer of the particular set.

Since the company and the dealers themselves spend thousands of dollars in advertising, it should be self-evident that every effort should be made to see that these installations are made as carefully as possible and that a periodic check is made of the operation of the set in order to make whatever minor adjustments may be necessary to keep the set at its peak of performance.

All dealers and service organizations are strongly urged to check through their lists of television sets which they have sold and installed in these types of places, and endeavor to make occasional visits to the installations to determine their condition. Such visits can, by careful planning of the routing supervisor, be included in regular trips for installations or complaints in the vicinity. The results which will be obtained from such maintenance checks cannot be overestimated and will undoubtedly save money and time by the elimination of unnecessary complaint calls or serious complaints which may arise from minor defects having been permitted to exist over a long period of time. Since commercial installations are charged for at a higher rate than standard installations the service organization can well afford to give this special type of service which will be of benefit both to the set owners, the servicemen, as well as the dealers and Du Mont.

REPLACEMENT SLUGS FOR HORIZONTAL OSCILLATOR TRANSFORMERS

Breakage of the top slug (frequency adjustment) of the horizontal oscillator transformers has been the cause of the majority of defects in this circuit. It is not necessary to replace the entire transformer as replacement slugs are available from our Spare Parts Department. In the event the top slug is broken which is usually the case, it may be replaced by simply removing the shield can and taking out the slug. If the bottom slug is broken it will be necessary to disconnect the wires on the bottom of the transformer to make the replacement.

In either event it would be more economical to make the replacement of the slug than to replace the whole transformer. The part number for these slugs is 55002340. The price of these slugs is $0.07 to dealers and service organizations.

CLEANING THE TELESET

The inside of a Teleset is a choice location for dust and dirt to settle. Accumulation of dust allowed to remain any length of time, becomes a very real enemy to the operation of the television receiver. The danger is more imminent when the weather becomes very humid. Obviously, in those parts of the country where the humidity is always high, the importance of keeping the set clean is naturally greater.

It is suggested that in order to avoid some unnecessary service calls in the future, all service organizations consider making a routine cleaning check on their customers' sets. While your first thought may be that this will involve an additional and unnecessary expense, second thought should convince you that the elimination of calls and replacements in the future will more than compensate for the time and bother involved.

It is suggested that all chassis be thoroughly cleaned and loose dust and dirt removed therefrom either by a compressed air jet or by a small portable vacuum cleaner attachment. Particular care should be used to avoid breaking of wires or loosening of connections during the process.

In cleaning Chatham or Savoy Telesets particular care should be given to the cathode-ray tube face. In these sets a fiber mask, rather than a soft rubber mask, is used and unless the tube is in close contact with the mask, dust and dirt can filter in between the safety glass and the face of the cathode-ray tube. As the cathode ray tube carries a heavy static charge, it acts as a dust precipitator and in the course of time becomes covered with a thin layer of dust. This film of dust reduces the brilliance and clarity of the picture. The tube face should be carefully cleaned, therefore, and in replacing the chassis care should be taken to have the tube face in good contact with the mask. The effect of the removal of the dust film from the face of the tube will be surprising and you will find the improvement in brilliance and clarity will be well worth the trouble involved.

Particular attention should be paid to the cleaning of sets in bars and taverns as the smoke which is prevalent in those establishments is laden with nicotin which causes a yellowish coating on the safety glass and, in some cases, the tube face itself. For tavern or restaurant installations it is also recommended that scotch tape is used to seal the inductuner case of the inputuner. Sealing the edges of the shield will prevent the grease from getting into the coil section.

After cleaning the RA-105 Telesets, special care should be exerted when returning the cathode-ray tube to the cabinet after cleaning.

The CRT faces in the RA-105 get dirty quite readily because in many cases the tube assembly was not pushed far enough forward in the cabinet. As this assembly rides on a track, it must be pushed all the way forward on the track so the front of the tube assembly touches the glass, otherwise the tube will get dirty.

Any chassis which is covered with a layer of dust at the beginning of a humid season is a perfect set up for possible corona and high voltage breakdowns. The dust particles absorb moisture from the atmosphere and thus present breakdown paths between terminals or exposed connections. The combination of high humidity, high voltage, and a layer of dust can bring about serious results. Keep your service and replacement costs down by a thorough cleaning, especially in the spring.

CABINET REPAIRS

The wax bags used in packing our Telesets, haveon occassions caused slight polish marks. These "wax spots" as they are sometimes called can be readily removed by the following methods:

1. Use of rotten stone and oil or water rubbing lightly with the grain.

2. Use of Johnson's new liquid cream wax polish.

3. Use of simonize cleaner rubbing lightly with the grain.

4. Use steel wool, size #0000, only by an experienced polisher.

Methods one, three and four will give a satin finish and two will give a high gloss. The removing of the above spots is to be done by the dealer and these marks are not to be considered as cabinet defects.

INSTALLATION AND HANDLING OF TYPE 19AP4 TELEVISION PICTURE TUBE

Anti-Corona Coating

An anti-corona coating has been placed on the glass funnel and neck to give satisfactory operation under conditions of high humidity. Avoid handling the tube by the neck and funnel. Moisture and salts from the hands will lessen the effectiveness of the coating. If the coating becomes dirty or contaminated, wash with water or mild soap and water. Make sure that any soap is removed with a water rinse. Do not use chemical solvents or abrasives for cleaning.

Anti-glare Coating

In the early Bradford Telesets the face plate of the 19AP4 has been given an anti-glare coating to reduce reflection from the viewing surface of the tube under conditions of high ambient lighting. Observe the same precautions in handling that were described under anti-corona coating. The 19AP4 tubes in the latest Bradfords are not coated with the anti-glare solution.

Ion Trap Adjustment

(This applies to the 12QP4, 12RP4, and 15DP4 as well as the 19AP4)

Make all initial ion trap adjustments at the lowest setting of the brightness control possible. The correct position for the ion trap magnet is shown in figure 1.

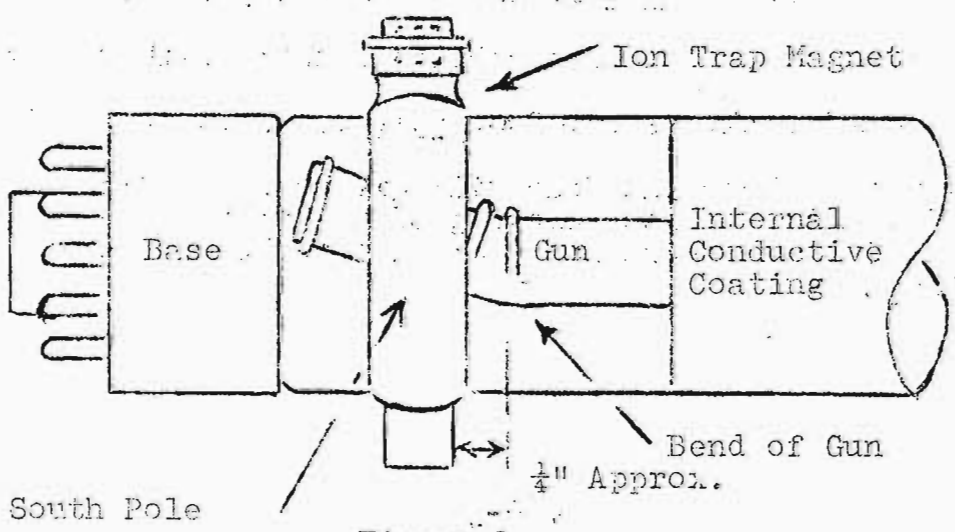

Figure 1

With the base end of the gun pointing up as shown, slide the magnet over the neck. The north pole should be to the left adjacent to pin #12 and the south pole to the right adjacent to pin #6. The magnet should be placed about ¼" in back of the bend in the gun for the first adjustment.

Rotate the ion trap magnet about an eighth of a turn each way and slide it back and forth along the neck stopping at the point of maximum brightness. Keep reducing the brightness as the system is brought into line to avoid damage to the tube. After alignment at low brightness, make a final adjustment with the brightness control set to where the raster just starts to "bloom". At this point the raster begins to expand in size rapidly.

If no raster appears and all other conditions are normal, it is possible that the magnet polarity is reversed. Rotate the magnet through half a turn around the neck. Then make adjustments as before; if there is still no raster, try another magnet before looking for other sources of trouble.

Do not leave the tube on any longer than necessary when making preliminary adjustments. If the beam of electrons is operated at high intensity before being brought into line with the ion trap magnet, it may damage the internal structure of the tube. For the same reason, it is important that the final adjustment of the magnet is made for maximum screen brightness. Failure to do this may result in burning the limiting aperture or the release of gas into the tube.

Focus Coil and Deflection Yoke Adjustment

The focus coil and deflection yoke should be carefully aligned so that the raster covers the screen properly. Do not use the ion trap magnet to get screen coverage. It should be used only to obtain maximum pattern brightness.

IMPORTANT ADDITION TO ABOVE PROCEDURE

Sometimes it will be found possible to get two brightness maximums when moving the ion trap magnet back and forth along the neck. The correct position to use is closer to the base of the tube. The second maximum is usually found when the magnet is close to the case of the focus coil. The magnetic shunting effect of the focus coil case on the ion trap magnet changes the field strength so that a brightness maximum is obtained in this incorrect location. Tubes should not be operated at the second maximum since spot centering is disturbed and there is a possibility of tube damage.

Safety for TV Set Servicemen, Dealers, Et Cetera

(The following information on the handling of cathode-ray tubes has been prepared by the RMA Cathode Ray Safety Committee.)

Servicemen who install or service television receivers have a great responsibility both to the public and to the industry, as well as a personal interest, in seeing to it that no accident due to carelessness or negligence will occur to arouse fear of this new instrument of home entertainment.

The television receiver, largely because of the presence of the picture tube, contains certain potential hazards that were not in the radio set. But these hazards need not cause anyone apprehension providing a few simple precautionary rules are observed by the serviceman. The picture tube is not dangerous if properly handled.

There are two ways in which injury can occur if a picture tube is carelessly handled either in a service shop or at a set owner's home. One is from the breakage of the picture tube possibly resulting in flying glass, and the other is from high voltage shock. Most trained servicemen know how to guard against shocks, but the breakage of picture tubes can result from carelessness regardless of the serviceman's experience.

Any serviceman can be sure that he will neither injure himself nor cause injury to someone else by following a few simple safety rules. These are:

1. Don't expose picture tube until you are ready to use it.

2. Always wear goggles when handling a naked tube.

3. Keep people away at a safe distance when a picture tube is exposed.

4. Place the used tube in the carton which contained the new tube and take it away.

5. Always keep the picture tube in the protective container whenever possible. Always place an exposed tube on some sort of clean soft padding when necessary to set it down.

6. Don't leave any picture tubes lying around. There are two safe ways of disposing used tubes:--

   a. Place the old tube in a shipping carton properly sealed and then drive a crowbar or similar instrument through the closed top of the container.

   b. An alternative method in the disposing of more than one tube, is to use a metal ash can with a plunger operated through the closed top.

7. Don't use regular picture tubes for displaying purposes. Contact your supplier for special display tubes.

DU MONT TELESET FAILURE REPORT

To improve our Telesets and make them as trouble free as possible, it is vital that we receive accurate field reports. To facilitate these reports we have devised a "Teleset Failure Report". It is available to all our dealers and service organizations. We ask that you fill this out and send it to us at least once a month. The purpose of this report is two-fold. First, it enables us to get an idea of how our sets are functioning in various parts of the country. Secondly, it permits us to obtain information that may be condensed into a trouble shooting table and send it to all our dealers and service organizations, thus, permitting more rapid trouble shooting. In many cases the same difficulty is more apt to occur and by referring to such a table it enables the serviceman to eliminate the more probable troubles.

Pertaining to tubes, we are definitely interested if one manufacturers' tube is giving more trouble than that of another in any specific circuit.

This report may also be used to notify us of any Telesets that fail to operate upon receipt. Very little trouble should be experienced with the operation of our Telesets immediately after unpacking. If the set becomes damaged in shipment, that is a matter that will have to be taken up with the carrier and our transportation department. However, if the failure to operate is due to defective components, poor workmanship or any part shaking loose during shipment it is very important that we are informed of this. All reports will be acknowledged. Upon receipt of such reports, if any particular trouble is being investigated the progress of the investigation will be made known in the acknowledgement. Copies of this failure report will be sent to the dealers and service organizations at frequent intervals. Additional copies may be obtained at any time upon request.

STOLEN TELESETS

Frequently we receive reports from dealers or distributors or, in some cases from the civil authorities, that certain of our Telesets have been lost or stolen. All dealers and service organizations will be notified of such Telesets in the regular issue of service bulletins. This service is available to our authorized dealers and service organizations.

CHASSIS HOLD DOWN BOLTS

All Du Mont Telesets are so constructed that the chassis are held down by means of chassis hold down bolts. These bolts are used not only to fasten the chassis to the cabinet but also to provide a suitable ground connection between the chassis and the screen mounted underneath the chassis. It is, therefore, important that these bolts be replaced when the chassis are replaced. On a number of occasions, our Field Representatives have found that these bolts were not replaced.

ATTENTION DEALERS AND SERVICE MANAGERS

We are in the process of procuring a hard cover binder suitable to be used for enclosing our Service Manuals and Service Bulletins. The front cover and binder back will be embossed as shown in the sketch below:

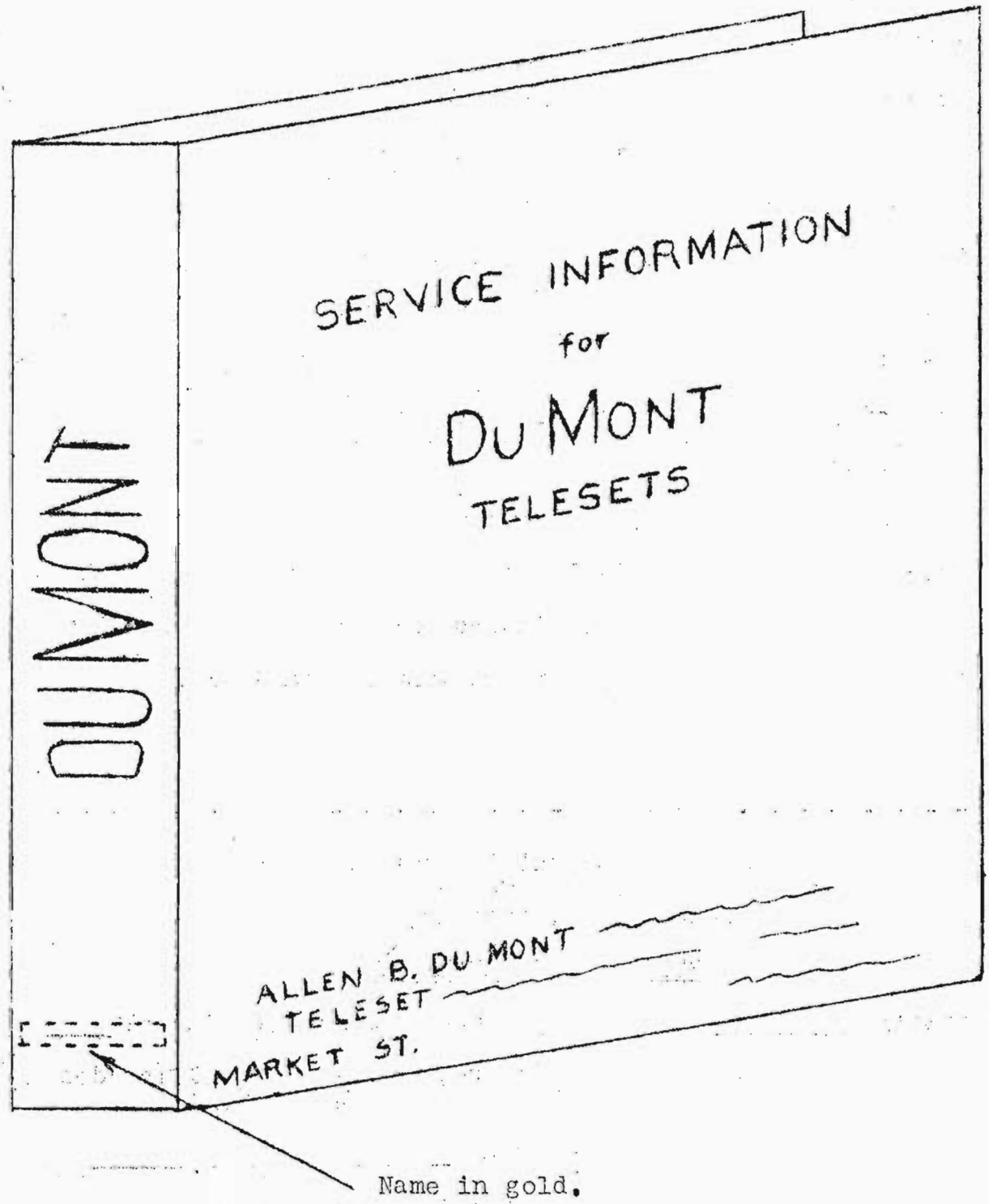

Note that a place has been located where the name of the dealer or service organization may be stamped in gold if so desired.

The use of such a binder provides the advantage of keeping all the Du Mont servicing information in one place. It also presents a much neater appearance to a customer if your serviceman opens such a binder in his presence.

The binder is a hard cover, 3 post affair, reinforced and with an expandable feature. The exact price will depend upon the quantity purchased. We, therefore, hope to receive enough orders to reduce the price to approximately $4.00. An additional charge of $0.50 will be made for stamping your name in the space provided.

Anyone interested in procuring one or more of these binders is requested to fill out and send in the form at the bottom of this page. These binders will be supplied complete with all service notes and service manuals available.

- -

Allen B. Du Mont Laboratories, Inc.
Teleset Service Control Department
2 Main Avenue, Passaic, New Jersey

SERVICE BINDER ORDER FORM

Quantity _____

* Name stampted on binder? _____

If so, show exact spelling desired
(Please print)

Name _____

Address _____

_____

CATHODE-RAY TUBE REPLACEMENT

All tubes currently being used in Du Mont Telesets use the bent gun, thus requiring an ion trap magnet.

The older models containing tubes with the straight gun replacements should be made as follows:

A 12JP4 should be replaced with a 12RP4 for it is exactly the same blank. An ion trap magnet must be used with this tube.

15AP4's should be replaced by 15DP4's, also using the ion trap magnet.

20BP4's will be replaced by a 20BP4 if the Teleset from which the tube was taken is still in warranty. However, if the defective tube is not in warranty, 20BP4's will be replaced with the necessary modification kit to permit proper mounting of the 19" metal tube. The modification kit for this change may be obtained from the Spare Parts Section of the Teleset Service Control Department. For the correct method of adjusting the ion trap magnet see page G-4 of these Service Notes.

GENERAL SECTION

ION TRAP MAGNET ADJUSTMENT

You have probably noticed that on current Telesets it is necessary to place the ion trap magnet over the base of the cathode-ray tube in order to get the correct adjustment for maximum brightness.

Although contrary to the installation instructions and the instructions on pages G-4 and G-5, this new position is the result of a slight change in the design of the electron gun in the cathode-ray tube. Due to this design change, the magnetic field necessary for proper beam bending is decreased. Therefore, the position of the magnet indicates that it is too strong to be placed on the glass neck and, therefore, must be placed back over the base. Under no condition should this magnet be placed next to the focus coil.

DEFECTIVE VIDEO IF TRANSFORMERS

Some complaints of breakdown of the ceramic coupling condenser in the video IF transformers have been received. The condition encountered was an arc-over between the end of the silvered ceramic tube and the bare wire that fits in it. These transformers are used in the RA-109A, RA-111A, RA-112A and RA-113 Telesets. The condition was corrected by the use of a synthetic coated wire. It is not necessary to replace the entire transformer to correct this defect. Instead, the bare wire should be removed from the ceramic tube and a 1.5 mmfd 400 volt type GA-3 Stackpole capacitor, or equivalent, should be connected between terminals 2 and 4 (grid to plate) of the transformer. After making this change, a slight amount of rephasing of the grid and plate coils of the respective transformers will usually be necessary.

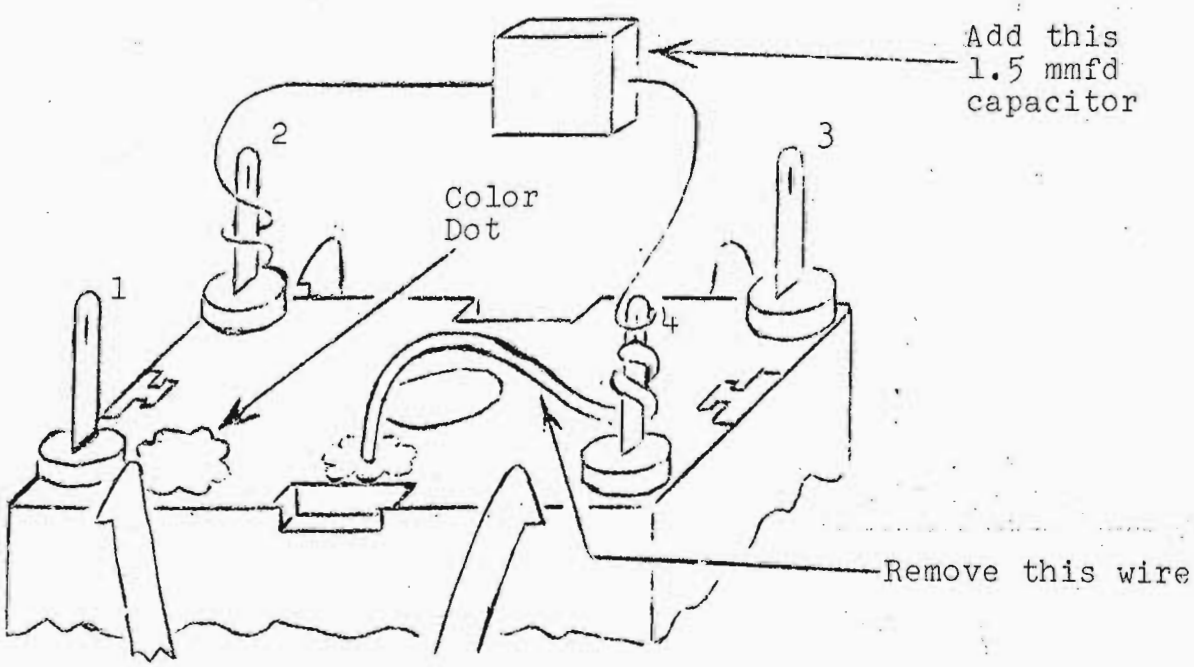

CRITICAL TUBE SUBSTITUTIONS

The existing shortage of certain critical tubes has resulted in the shipment of some Telesets to the field minus these tubes. In previous service notes, we have indicated certain substitutions for the missing tubes. Until the current tube shortage is over, it will, from time to time, be necessary to make certain substitutions for critical tubes here at the factory.

To assist you in readily identifying chassis having a tube complement other than shown on our schematic diagram, we will code these chassis using substitutions and in addition, will advise you of the serial numbers of the chassis affected. As outlined in the information to follow, for future replacements, some of the substitutions are such that either the original tube or its substitute may be used since there is no change to the socket or circuits. However, in certain other substitutions a socket change plus certain circuit changes have to be made.

In order to keep all information on tube substitutions in one part of the General Section of the service notes, any previous information on this subject is to be deleted as it is contained in the paragraphs that follow. The number enclosed in parentheses shown adjacent to each substitution is for reference only and has no other significance in the field.

This information supersedes all previous information on this subject:

(4811) 1. The type 6BA6 tube may be used as a replacement for the type 6AU6 in the first and second video IF stages, providing that both 6AU6's are replaced by two 6BA6's simultanecusly. (This substitution may be made in the field in any of our current Telesets

(4812) 2. A type 6CB6 tube may be substituted for the 6AU6 in the second sound IF amplifier of the RA-109A, RA-112A and RA-113. This substitution requires the addition of a tube shield, part number 42002530, and a shield base, part number 42002540. The latter may be readily soldered in place in the field, rather than riveted or bolted.

(4813) 3. A 6CB6 may be substituted for the 6AH6 video amplifier, V210, in the RA-112A and RA-113 without any component changes but with a simple wiring change. Pins 2 and 7 must be interchanged and the plate circuit must be tied to a 200 volt point rather than 305 volts, as shown in the sketch on the following page, G-14B.

(4814) 4. A 6BC5 may be substituted for the 6AU6 first sync clipper, V219, in the RA-109A, RA-112A and RA-113. This change does not require the addition of parts or wiring.

(4789) 5. The type 6AC7 may be substituted for the 6AH6 video amplifier in the RA-112A and RA-113 Telesets. This tube is not a direct substitute and several items will have to be changed. These are as follows:

a) The socket is to be changed from a miniature (part number 34001220) to an octal (part number 34002380).

b) R241 is to be changed from 4.3K 5% 2W (part number 02036631) to a 3.9K 5% 2W (part number 02036620 alternate parts are: 02046620 and 02056620).

SUBSTITUTION OF TUBES

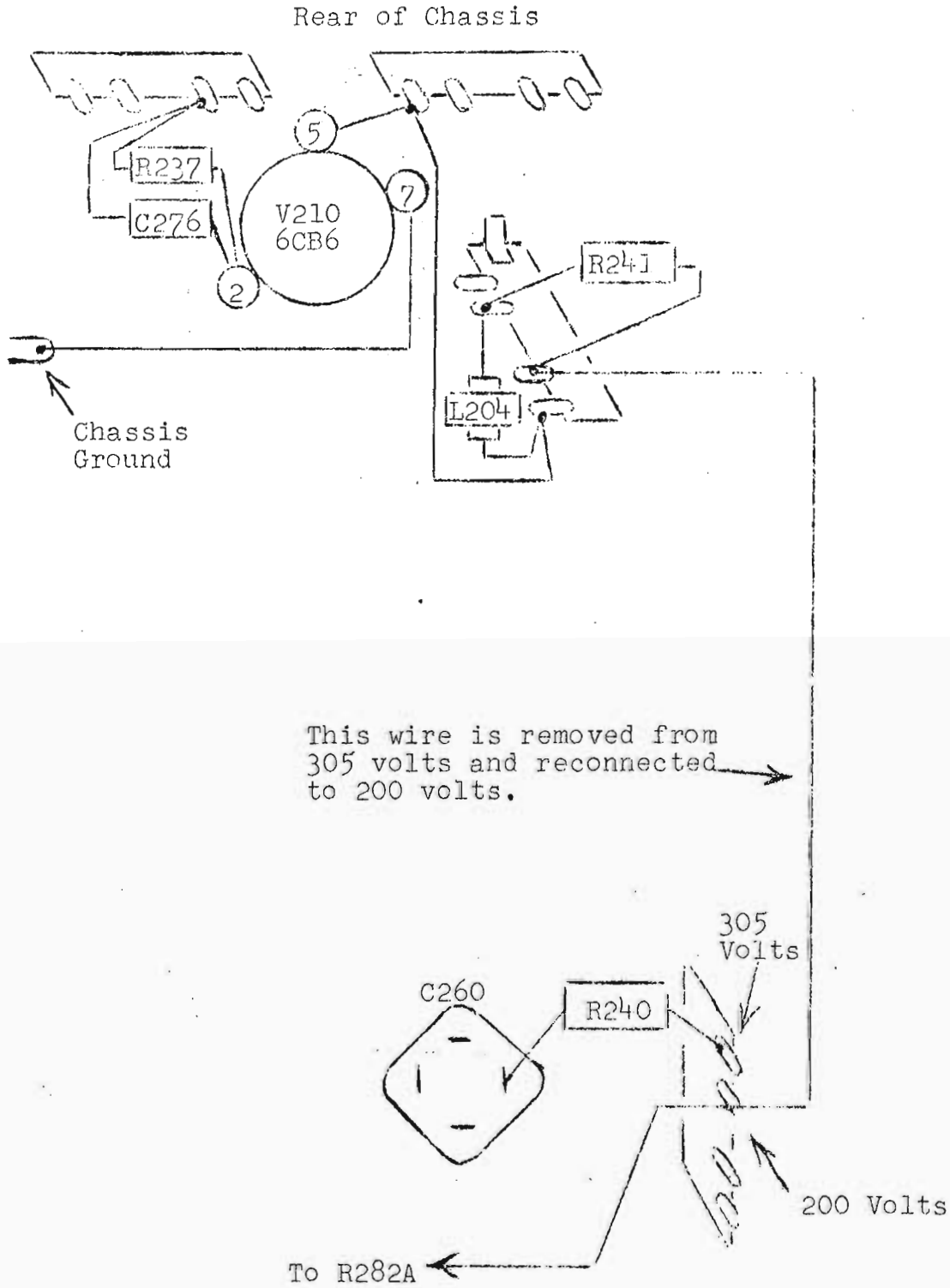

Rewiring for 6CB6 Substitution
In Video Amplifier Stage

The wiring and circuit changes are shown on this page, G-14C and the following page, G-14D.

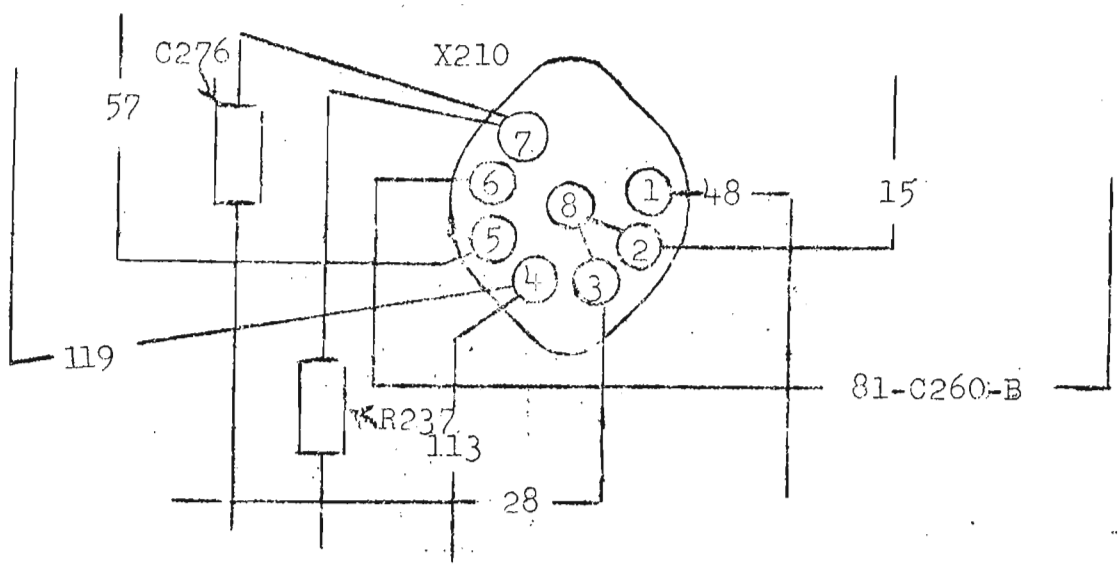

Present Wiring of 6AH6

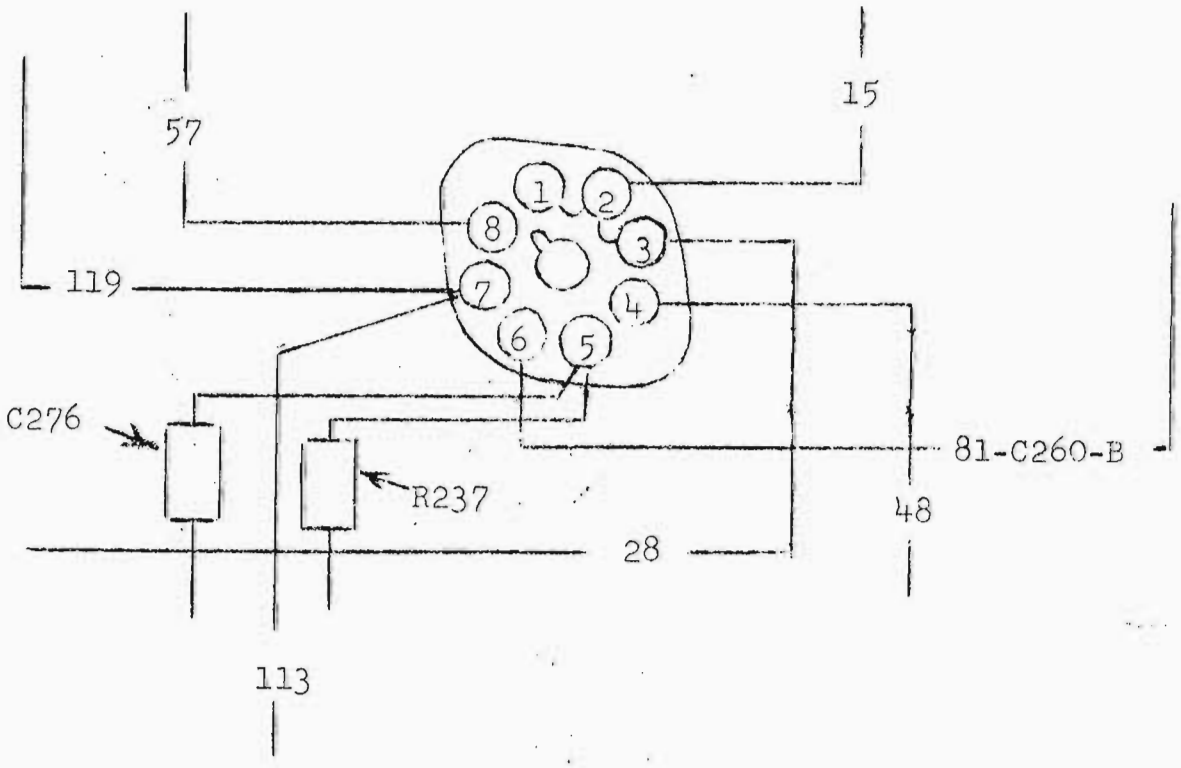

New Wiring for 6AC7

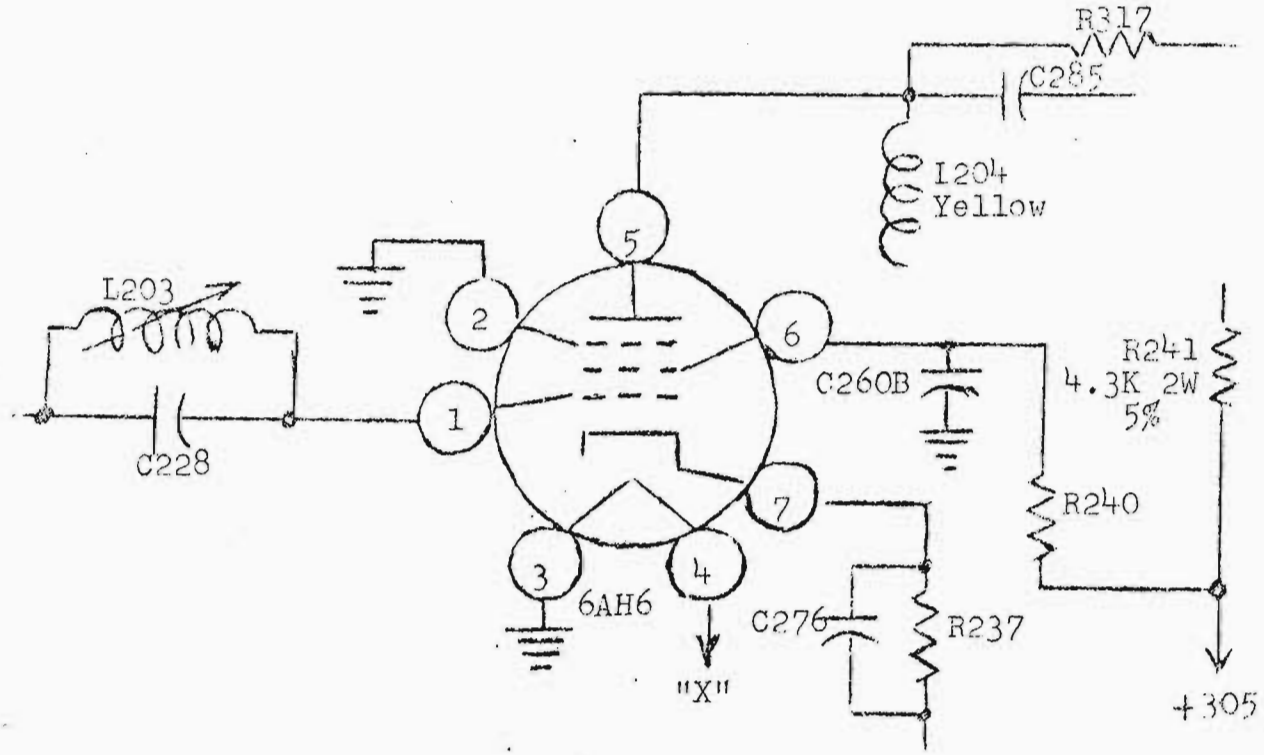

Video Amplifier Substitution
Present Schematic Circuit

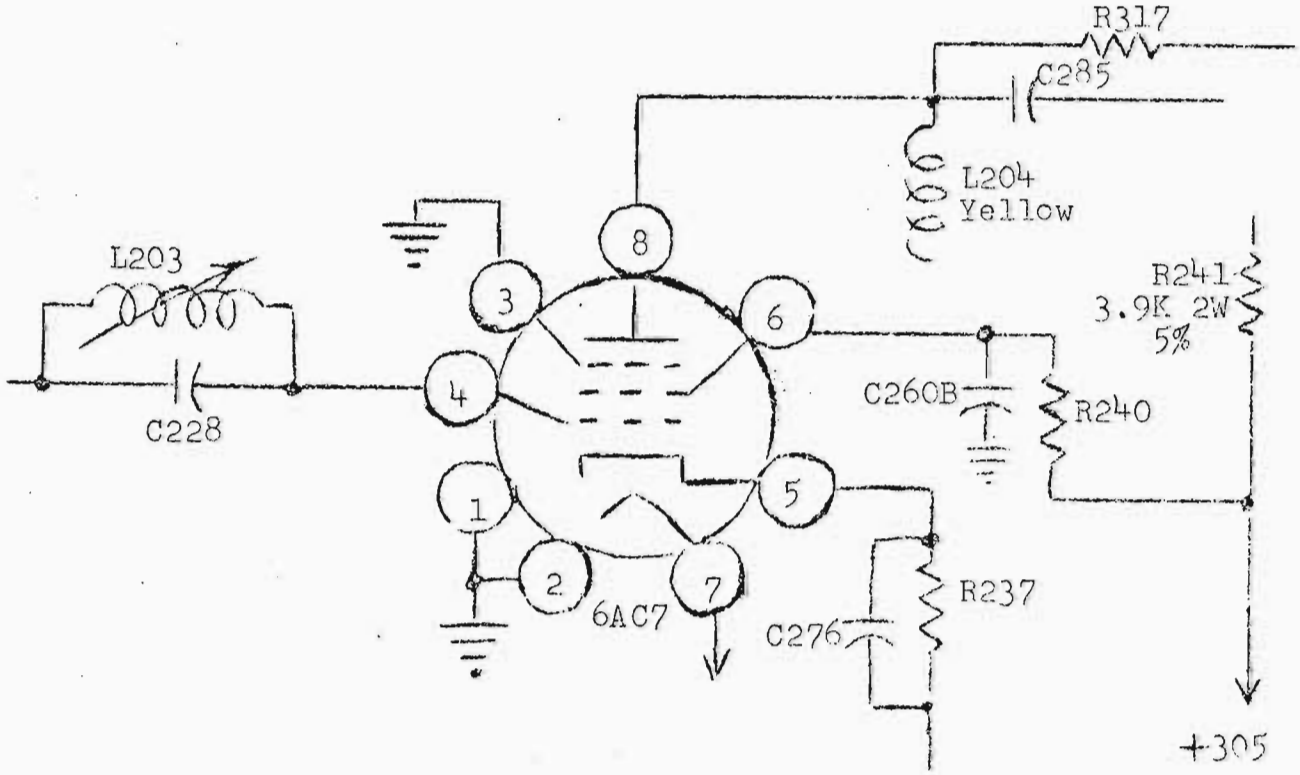

Video Amplifier Substitution
New Schematic Circuit

Any of the above substitutions that have been made can be determined by identifying the code number stamped on the back of the chassis and referring to the following table. Normally, you will find a large letter stamped on the rear of the chassis. Alongside of this letter will be a number. The significance of the letter designation will be found in the service notes pertaining to the model Teleset in question, providing it has a bearing on the service information. The numerical designation refers to one of those listed below and thus indicates the substitutions that are made.

Obviously, future additional substitutions will result in higher code numbers (5, 6, etc., for example). However, these code numbers will apply each time the substitution is made.

Substitution	Code stamped on Chassis	Model	Teleset Serial Numbers Affected
4813	1	RA-113	1311027 to 1311736, Inclusive
			1312719 to 1312999 "
4813, 4814	2	RA-113	1311737 to 1312718 "
4811, 4814	3	RA-112A	1213901 to 1214650 "
4811	4	RA-112A	1214651 - still in effect.

Although any of the above substitutions may be made in the field to Telesets not already incorporating these changes, it is important that the combination of substitutions 4811 and 4813 not be made together. The reason is that if both substitutions are applied to one set, a loss of gain will result. This will not be apparent in the strong signal areas. However, in the weak signal areas, the decrease in sensitivity will be noticed.

The substitution listed below has been incorporated in the chassis designated under the heading "Serial Numbers". No code number appears on these chassis as this procedure was not in effect at the time the substitution was made.

Substitution	Model	Serial Numbers
4789	RA-112A	1210824 to 1212823

Type 6CB6 tubes may be substituted for 6AU6's in the second sound IF amplifiers of the RA-109A, RA-111A, RA-112A and RA-113. This substitution requires the addition of a tube shield, part number 42002530, and a shield base, part number 42002540. The latter may be readily soldered in place, rather than riveted or bolted.

A 6BC5 may be substituted for the 6AU6 first sync clipper, V219, in the RA-111A, RA-112A and RA-113. This change does not require the addition of parts or wiring.

Type 6BA6 tubes may be used in place of the 6AU6's in the first and second video IF of the RA-109A, RA-111A, RA-112A and RA-113 Telesets providing both 6AU6's are replaced by two 6BA6's simultaneously. It is not advisable to use one 6BA6 and one 6AU6 in these positions.

SPARE PARTS SECTION

Spare Parts Orders

On all orders requesting parts, we must insist that part numbers be used to identify the items requested. Our service manuals list the part numbers, and it should be comparatively easy to furnish us with them when ordering. Since some of the personnel engaged in expediting the shipment of your orders are non-technical, descriptions of parts or electrical values furnished are inadequate and result in unnecessary delays in filling your orders or may result in misinterpretation of what you are ordering.

Telephone and Formal Orders For Parts

We prefer to have formal purchase orders for every item ordered from this department. However, we realize that in some cases this would hold up service work on your Telesets. Because of this, we are still willing to take telephone orders, but must insist that they be confirmed immediately by a formal order. This change is being made because in the past few weeks we have had dealers or service organizations advise us that they had ordered parts by telephone and had never received them. If the telephone order had gone astray, it would have been shipped at the time the confirming order was received.

Twenty Four Hour Service

All parts orders will be filled within twenty four hours after they are received with the exception of unusually large orders which require more time to process.

Brach and Taco Antennas

The Spare Parts Sales Section stocks two types of antennas for use with Du Mont Telesets. The Brach antenna is very well constructed broad band folded di-pole and reflector for use in stronger signal areas. The Taco antenna is a high gain double di-pole with reflector for use in weaker signal areas.

Du Mont "Diddler"

A special tool, designed for use in aligning our Telesets is now available. This tool consists of a 3 inch Lucite rod with a piece of metal inserted in one end in such a manner that it is impossible for the tool to slip off the slug during alignment. These tools have been used in our factory for some time and have proven extremely useful.

Request for Return of Parts and Credit

To obtain authorization to return defective parts for credit, use the Request For Return of Parts and Credit. The instructions on the form are self-explanatory, however, we wish to advise you that in returning parts from sets still in your stock they should be identified on the form with the word "stock", and the serial number following.

If the parts are received without proper authorization, they will immediately be shipped back to you unopened, mail and freight charge collect. All replacement parts for those returned for credit must be purchased separately, as we no longer exchange parts.

In checking the electrical and physical condition of defective parts being returned for credit, we have found that in many instances the parts returned are not defective. For example, some transformers, chokes etc. have been received with the leads cut rather than unsoldered. Upon checking some of these parts we find that they are not defective, but could not be used again because of the way the leads were cut. We have also found many parts damaged through negligence in handling. Many speakers, for example, are received with holes in the cones. We must advise that in the future only defective parts in normal physical condition will be given credit by this department under the terms of our Teleset Warranty. If, after issuing this credit, we find that a part is not defective, it will be returned to you and you will be billed accordingly.

Exchange of Inputuners

Inputuners from Telesets out of the 90 day warranty period will be exchanged by this department in the following manner. All motor driven tuners used in our RA-101 models will be exchanged for a flat price of $16.00. All manual operated tuners such as used in the RA-102, RA-103 and RA-105 models will be exchanged for a flat price of $9.00 if the shaft is not broken and $14.00 if the shaft is broken.

In addition to the above charges, we will charge an additional $5.00 for inputuners received with cut leads. Any inputuners received with broken dials or missing parts such as tube shields or tubes will be subject to additional charges for the missing parts.

Replacement of Defective Cathode Ray Tubes

Any tube from a Du Mont Teleset brought into our plant by a dealer, service organization, or distributor representing dealers or service organizations within his territory, will be tested and replaced within one hour in accordance with our Warranty. All tubes shipped to us will be checked and replaced in accordance with our Warranty and shipped out the same day or the following day. This procedure will be carried out providing, of course, that the Warranty Registration is here and the set is still within the guarantee period. Inasmuch as we are speeding up our replacements, we trust that you will be able to give the same fast service in the removal of the tube, bringing or shipping the tube to us, and replacing it in the customer's set.

Packing of Cathode Ray Tubes

All dealers, service organizations and distributors must bring or send in cathode-ray tubes for test properly packed in the standard box designed for the size tube involved. Tubes not properly packed or those brought in without boxes will not be accepted.

Effective November 1, 1949, our new policy on replacement of inputuners and record changers will go into effect.

We will no longer accept inputuners or record changers, within guarantee for credit. In lieu of this, a direct replacement will be made for these items. This policy applies only to inputuners and record changers. All other parts returned within guarantee will be given credit in the usual manner.

INSTALLATION SECTION

This section is devoted to the solution of problems normally encountered in installations. Not only will this section cover the installation itself but will also pertain to interference and other adverse conditions that may be present at the point of installation.

We are interested in obtaining from the servicemen in the field, case histories of installations that are unusual and would be of interest and value to other servicemen.

We plan to include a bibliography of various references that may be read by the TV serviceman to further his knowledge of installations.

We intend to publish in the not too distant future, a manual devoted entirely to the proper installation of Du Mont Telesets. We hope to make this manual as practical and useful as possible and welcome all suggestions from you men in the field.

Index Installation Section

INSTALLATION

All Du Mont Telesets are designed using 72 ohm unbalanced input. Therefore, for optimum performance it is desirable that coaxial cable be used for the transmission line.

In locations where the signal is strong RG-59/U cable is satisfactory. However, in fringe areas it is essential that the transmission line losses be kept to an absolute minimum. Therefore, the use of RG-59/U in these areas is not advisable.

A much lower loss coaxial cable that can be used in place of RG-59/U in fringe areas is identified as RG-11/U. The line losses in this cable are slightly lower than that in the 300 ohm twin lead cable as commonly used with 300 ohm receivers. It is recommended that whenever necessary RG-11/U transmission line be used.

It is possible to use the 300 ohm twin lead transmission line with Du Mont Telesets in fringe areas. However, some means for converting the balanced 300 ohm line to the unbalanced 72 ohm input will have to be used.

One commercial type of transformer that can be used for this purpose is known as the Workshop T72 transformer. However, it should be pointed out that if the Teleset is to be located in a weak signal area where considerable noise is present it is not advisable to use the 300 ohm twin lead since the noise pick up on this line is greater than that when using RG-11/U coaxial cable.

ELECTRICAL CHARACTERISTICS OF COAXIAL CABLES FOR USE WITH DU MONT TELESETS

JAN Type No.	Du Mont Part No.	Characteristic Impedance-Zo ohms	Nominal Attenuation -DB per 100' 30 Mc	100 Mc	300 Mc	400 Mc
RG-59/U	23-547	73 ± 3	2.0	3.8	7.0	8.9
RG-11/U	None	75 ± 3	---	2.1	3.8	5.3

RECEPTION AFFECTED BY TREE FOLIAGE

When making installations, it should be understood that any mass of foliage between receiving antenna and the transmitter location will seriously affect reception.

This is definitely noticeable in weak signal areas and causes the reception to vary with the condition of the foliage. Obviously the reception would be better in those months when there are no leaves on the trees.

Thus, in weak signal areas, to obtain consistent reception, the antenna should be raised above the trees.

ATTENUATORS FOR REDUCING SIGNAL LEVEL AT INPUT TERMINALS OF DU MONT TELESETS

In certain areas where Telesets are installed, the signal level is too high to permit proper control of synchronization. One of the best methods in use to reduce signal strength to usable levels is the "Pi" type resistance attenuator.

For the convenience of servicemen, the following circuit diagram and table of values of a standard attentuator is published.

db Attenuation Desired	R_a (ohms)	R_b (ohms)
5	257	43.8
10	139	102.5
15	103	196
20	88	356
25	80.5	637
30	76.7	1140
35	74.6	2020
40	73.4	4600
45	72.8	6400
50	72.5	11380

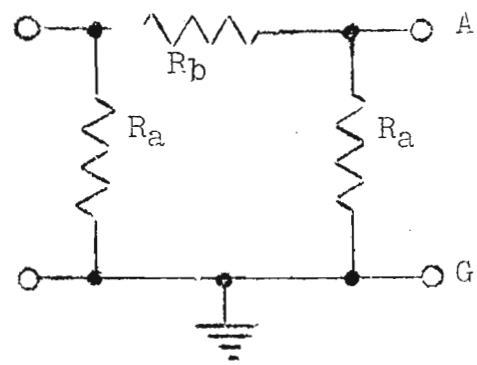

REPORT OF INTERFERENCE ON TELEVISION CHANNELS

The Federal Communication Commission has advised us that a rather large number of complaints have recently been received from owners of Du Mont television sets regarding interference on television channels. The interference reported has included code transmissions, amateur code and telephone transmissions, and FM broadcasting transmissions.

In each case the complainant apparently was acting on advice received from servicemen. As a result of complaints received, the FCC has had to make investigation of conditions which, in many cases, should not have been reported in the first place to the Commission, as the interference was due to improper adjustment of the receiver or faulty installation.

It is desired that servicemen receiving complaints of such interference obtain full information concerning the source of the interference, frequency on which received, type of interference, etc., and submit such information to the Teleset Service Control Department for investigation. Individual customers should not be advised to complain directly to the Commission.

HIGH VOLTAGE WARNING!

New York daily papers for May 5, 1948 carried an item concerning the accidental death of two television installation men who were electrocuted while engaged in installing a television receiver at a Long Island residence. The death of these two men was caused by their aluminum ladder coming into contact with a 13,000 volt high tension line.

The untimely death of these two installation men is a regrettable occurrence and is mentioned here as a warning to all installation men against one of the several hazards which may be encountered in connection with their work. Many service organizations and dealers are now using aluminum ladders because of their light weight and handiness on the job. However, all workers should be warned that such metal ladders, being excellent conductors, should be handled with particular care to avoid letting them come into contact with high voltage wires.

INSTALLATION OF TELEVISION RECEIVER ANTENNA

A recent letter from the Radio Manufacturer's Association, addressed to all Television Receiver Manufacturers, pointed out that in many cases installations being made by dealers and service organizations are not in accordance with the National Electric Code.

Violations mentioned included the use of Telephone Company standoff insulators to hold antenna lead-in, and the lack of outside lightning arresters or grounded shielding.

Portions of Article 810 of the National Electric Code which apply to Television Receiver installations are quoted herewith for your information.

"8112. SUPPORTS. Outdoor antenna and counterpoise and lead-in conductors shall be securely supported. They shall not be attached to poles or similar structures carrying electric light or power wires or trolley wires of more than 250 volts. Insulators supporting the antenna or counter-poise conductors shall have sufficient mechanical strength to safely support the conductors. Lead-in conductors shall be securely attached to the antenna.

8113. AVOIDANCE OF CONTACTS WITH CONDUCTORS OF OTHER SYSTEMS. Outdoor antenna, counter-poise and lead-in conductors from an antenna to a building shall not cross over electric light or power circuits and shall be kept well away from all such circuits so as to avoid the possibility of accidental contact. Where proximity to electric light and power service conductors of less than 250 volts cannot be avoided, the installation shall be such as to provide a clearance of at least two feet. It is recommended that antenna and counter-poise conductors be so installed as not to cross under electric light or power conductors.

8115. INDOOR ANTENNA. There are no requirements for indoor antennas except that they shall have the same clearance from the conductors of electric light and power circuits and signaling circuits as is required for lead-in conductors.

8122. SIZE OF LEAD-IN. Lead-in conductors from outside antenna, and counter-poise for receiving stations, shall, for various maximum open span lengths, be of such size as to have a tensile strength at least as great as that of the conductors for antenna as specified in section 8121. When the lead-in consists of two or more conductors which are twisted together or are enclosed in the same covering or are concentric, the conductor size shall, for various maximum open span lengths, be such that the tensile strength of the combination will be at least as great as that of the conductors for antenna as specified in section 8121.

8123. ON BUILDINGS. Lead-in conductors attached to building shall be so installed that they cannot swing closer than two feet to the conductors of circuits of 250 volts or less or ten feet to the conductors of circuits of more than 250 volts, except in the case of circuits not exceeding 150 volts, if all conductors involved are supported so as to insure permanent separation, the clearance may be reduced but shall not be less than four inches. The clearance between lead-in conductors and any conductor forming a part of a lightning rod system shall be not less than six feet.

8141. LIGHTNING ARRESTERS-RECEIVING STATIONS. Each conductor of a lead-in from an outdoor antenna shall be provided with a lightning-arrester approved for the purpose, except where the lead-in conductors from antenna to entrance to building are protected by a continuous metallic shield which is permanently and effectively grounded. Lightning arresters shall be located outside the building, or inside the building between the point of entrance of the lead-in and the radio set or transformers, and as near as practicable to the entrance of the conductors to the building. The lightning arrester shall not be located near combustible material nor in a hazardous location.

8161. INSIDE OR OUTSIDE BUILDING. The grounding conductor may be run either inside or outside the building.

8162. SIZE OF PROTECTIVE GROUND. The protective grounding conductor for receiving stations shall be not smaller than No. 14 copper or No. 17 copperclad steel or bronze, provided that where wholly inside the building it shall not be smaller than No. 18.

8163. COMMON GROUND. A single grounding conductor may be used for both protective and operating purposes.

If a single conductor is so used, the ground terminal of the equipment should be connected to the ground terminal of the protective device.

8181. CLEARANCE FROM OTHER CONDUCTORS. Except as provided in Article 640, all conductors inside the building shall be separated at least 4 inches from the conductor of any other light or signal circuit unless separated therefrom, by conduit or some firmly fixed non-conductor such as porcelain tubes or flexible tubing.

8182. RADIO NOISE SUPPRESSORS. Radio interference eliminators, interference capacitors or radio noise suppressors connected to power supply leads shall be of a type approved for the purpose. They shall not be exposed to mechanical injury."

It will be noted that a lightning arrester is not required under paragraph 8141 when the lead-in conductors from antenna to entrance of building are protected by a continuous shield which is permanently and effectively grounded. Such requirement would, therefore, be met by proper grounding of the outer shield of the regular coax cable now recommended for use with all Du Mont receiver installations. Installation men should be particularly cautioned to comply with paragraph 8123 and 8181 and to refrain from the use of insulators or cable clips installed on or in buildings by Telephone or Lighting Companies.

It is suggested that all service organizations obtain a copy of the 1947 National Electrical Code and insure that all of their installation men are familiar not only with the requirements of Article 810 but with the general requirements for running cable, installing fittings and other requirements which should be compiled with in connection with any installation work.

Compliance with the National Electrical Code will insure the service organizations or dealers concerned against the possibility of complaint or civil action.

REPORT ON INTERFERENCE ELIMINATION IN CUSTOM INSTALLATION

Some time ago an RA-101 Custom installation was made on the first floor of a 17-story apartment building in the heart of New York. The installation, made by one of our better and well known service organizations, was apparently normal with the exception that WABD could not be received. However, as the customer was informed by the installation crew that his location was such that only WCBS and WNBT could be received, he accepted the job as satisfactory.

Several months later a tenant on the 9th floor purchased a new Magnavox radio receiver and immediately experienced trouble. After thorough investigation by various service men, dealers, representatives, and the superintendent of the building, the cause of the various squeals, howls, and general interference on the Magnavox and the other receivers throughout the building was thought to be the "antenna" of the television receiver in the first floor restaurant. The realty company managing the apartment house directed the immediate removal of the antenna, which had been installed without their permission, under dire threats of lawsuits and other unpleasant things.

At this point, the set owner, the dealer and the service organization were all very unhappy and requested the assistance of Du Mont. An engineer from Quality Control was detailed to the job with the following results.

The antenna itself was found to be not at fault so far as radiation was concerned, although the interference was very definitely caused by the installation as a whole.

Further check showed that a portion of the interference was originating in the leads from the sweep chassis to the deflection yoke. This condition was somewhat improved by shielding both the cable between the sweep chassis and the deflection yoke and the CRT grid lead between the sweep chassis and the base of the CRT.

The next step was to shield the deflection yoke, as well as all cables between the cathode ray tube and the sweep chassis.

In connection with the shielding operations, a jumper was found between the center conductor of the antenna coax and ground. This jumper was removed and caused such an increase in signal

level received that the Teleset would not sync. A 20DB attenuator was then provided and installed in the antenna line at the receiver.

Some interference was still experienced in various radio receivers about the building so the antenna lead was traced through. It was found that this lead had been run from the first floor to the roof through a 3-inch conduit which also contained the open antenna lines for all standard radio receivers in the building. The shield of the antenna lead had not been grounded at any point throughout this run. By grounding the antenna coax shield at approximately every alternate floor through the building and at the antenna, it was found that the last of the interference had been eliminated.

The removal of the jumper previously mentioned and the substitution of the attenuator had increased the horizontal resolution of the received picture from 250 lines to 300. However, WABD was still not receivable with a usable picture, so, being on the spot, the engineer determined to find out why. After considerable experimentation and relocation of the antenna, an optimum location was found. A combination H antenna and vertical whip was installed and found to give satisfactory performance on all three stations - WABD, WNBT, and WCBS.

Details of the grounding of the antenna lead and the shielding of the set leads are as follows:

The antenna distribution system in the building consists of a 3" conduit from roof to basement. The conduit is interrupted at each floor by an outlet box which permits taking an antenna from the conduit at any floor desired. The grounding of the antenna coax lead was done by stripping 1" of insulation at various points and running a bond from the coax shield to the inside wall of the conduit box. This was done at the 2nd, 3rd, 5th, 7th, 9th, 11th, 14th, and 16th floors. The conduit itself was then grounded to the water tank on the roof and to a water pipe in the basement using shield braid.

The five leads between the sweep chassis and the deflection yoke were shielded by pulling same through a 1/4" shield braid, and the seven leads between the sweep chassis and the base of the C.R.T. were pulled through a second 1/4" shield braid. (Du Mont part number for this shield braid is 23-16).

The special shield for the deflection yoke was a copper cylindrical type as shown in Figure 1.

The attenuator used was a simple resistance 'L' type.

The particular points which should be stressed in installations of this type are:

1. Be sure that authority to install the antenna and installation is obtained in writing by the set owner from the realty company concerned.

2. Do not run long coax leads in proximity to other antenna leads or building wiring without adequate grounding of the shield.

3. When signal strength is too high, use proper attenuators rather than makeshift devices which affect the picture resolution.

4. Use special shielding on long leads when necessary. Remember, it is entirely possible to operate a standard AM receiver within 10 feet of a properly installed Teleset without interference.

5. Do not give up too easily on location and type determination of the antenna. The antenna is the most important part of the installation and many service calls about snow, ghosts, and poor reception of certain stations can be eliminated at the outset by experimentation. In many cases, it is necessary to use two antennas of different types to obtain proper results.

6. Get in touch with Du Mont for assistance when you run into troubles you can't lick singlehanded.

ELIMINATION OF ANTENNA WIND NOISE

In certain locations, high winds have caused the antenna array to "howl", whistle, or vibrate. In New Hampshire and certain parts of Massachusetts the procedure has been to fill the antenna elements with saw dust and to close the ends with putty. The mast is also filled with saw dust and is calked at both ends. Guy wires are loosened slightly if they tend to "sing" at an audible frequency. Inserting wooden dowels in the antenna rods and squeezing down the ends of the antenna will produce similar results.

FM INTERFERENCE

Interference from FM broadcasting stations has caused some difficulty in most locations throughout the country. The interference may be caused by reception of an FM station on the image frequency of the television channel being received. Channel 2 is most susceptible to interference from an image. This can readily be seen in the following chart:

Channel	Range	Video Carrier	Local Oscillator	Image Frequency
2	54-60 mc	55.25 mc	81.65 mc	103.25 - 108 mc

Since 26.4 mc is the video IF frequency that corresponds to the video carrier, the local oscillator is equal to the video carrier frequency plus 26.4 mc (81.65 mc). The local oscillator also beats with other signals that may be applied to the mixer. If the signal from a strong FM station (frequency between 103.25 mc and 108 mc) is applied to the mixer the local oscillator will beat with it to produce a signal between 22-26.4 mc. This can be passed by the IF amplifier and appear on the picture tube at the same time as the channel 2 signal, thus causing interference. The intensity of the interference of course depends on the strength of the image signal.

FM interference may also be caused by fundamental overloading of the RF and mixer stages by a strong FM station. This results in generation of harmonics of the FM station frequency. The second harmonic is the most annoying as it usually falls into and causes interference with, one of the higher TV channels.

The basic principle behind the elimination of FM interference of either type is to attenuate the FM signal at its fundamental frequency. This may be accomplished by the use of a trap in the antenna input to the receiver. A simple parallel resonant trap which is available from the Teleset Service Control Department may be inserted in series with the transmission line to accomplish the desired results.

This trap is designed to tune over the FM band (88-108 mc) and, therefore, attenuate the signal. This trap has been used in many locations and has been found to work satisfactorily. The normal method of installation is shown in Figure 1.

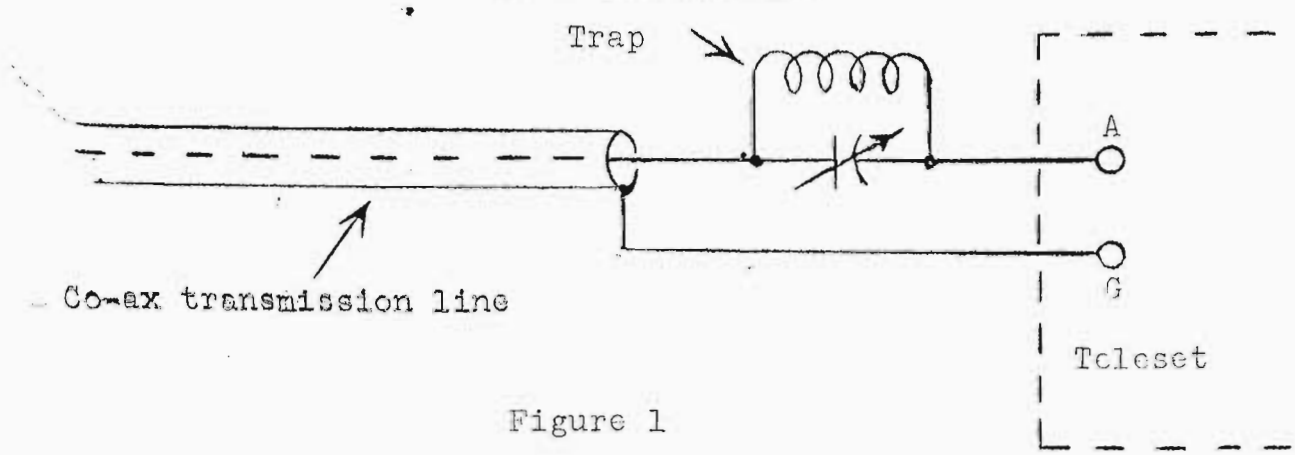

Figure 1

In some very extreme cases of interference, especially where the Teleset is located close to the FM station, it is necessary to insert one trap in the shield of the coax as well as one in the hot side of the line. This is shown in Figure 2.

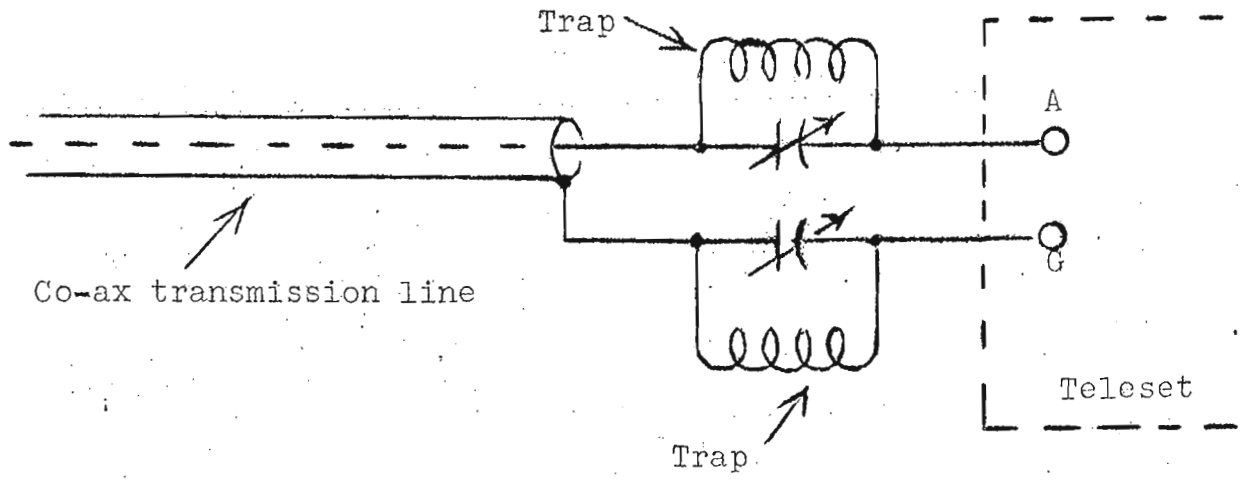

Figure 2

These traps may be purchased from the Teleset Service Control Department for $.50 each. Please contact this department if any difficulty is encountered in the elimination of FM interference.

Series Resonant Traps for FM Interference

The parallel resonant trap has been found to be very inconvenient to install in the 72 ohm coax type of antenna lead used on Du Mont Telesets. A more convenient and equally effective method for eliminating FM interference in many locations is the insertion of a series resonant trap shunted across the transmission line at the antenna terminal of the receiver. This series trap is designed to tune over the FM band (88-108 mc) and can be easily adjusted for resonance at the frequency of the interfering station.

Series FM traps may be purchased from the Teleset Service Contro. Department for $.50 each. For convenience in mounting, two types of series traps are available:

Part No.	Description	Used on Teleset Models
21005881	Straight Bracket Type	RA-103C RA-103D RA-104A RA-110A
21005891	"L" Bracket Type	RA-105A RA-105B RA-106 RA-108A

Because of the convenience in mounting the series trap, the parallel FM trap will no longer be available. For installation instruction, see the following sketches.

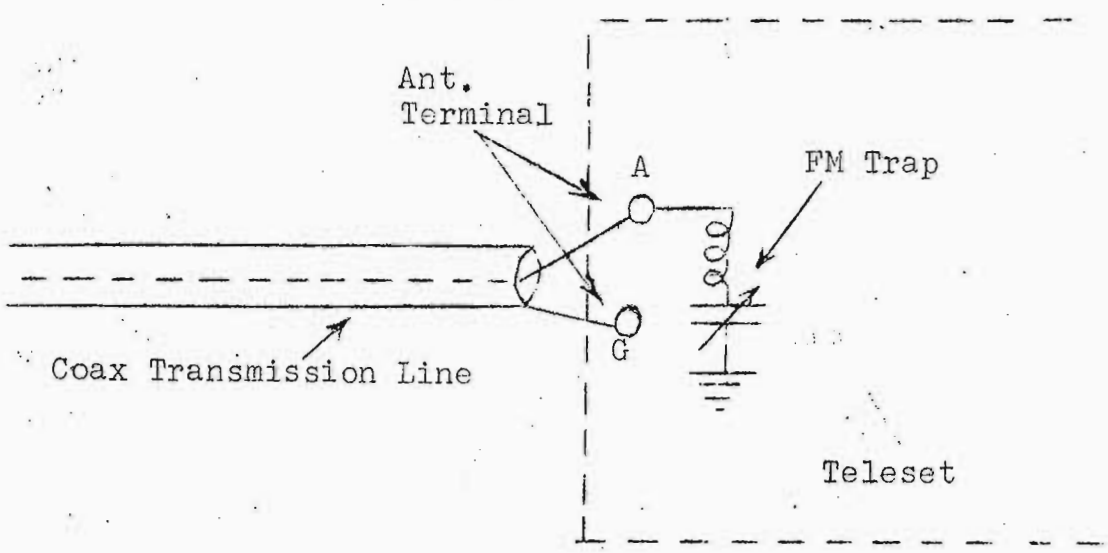

FM Series Trap - Straight Bracket Type

Used on RA-103c - RA-103D - RA-104A - RA-110A

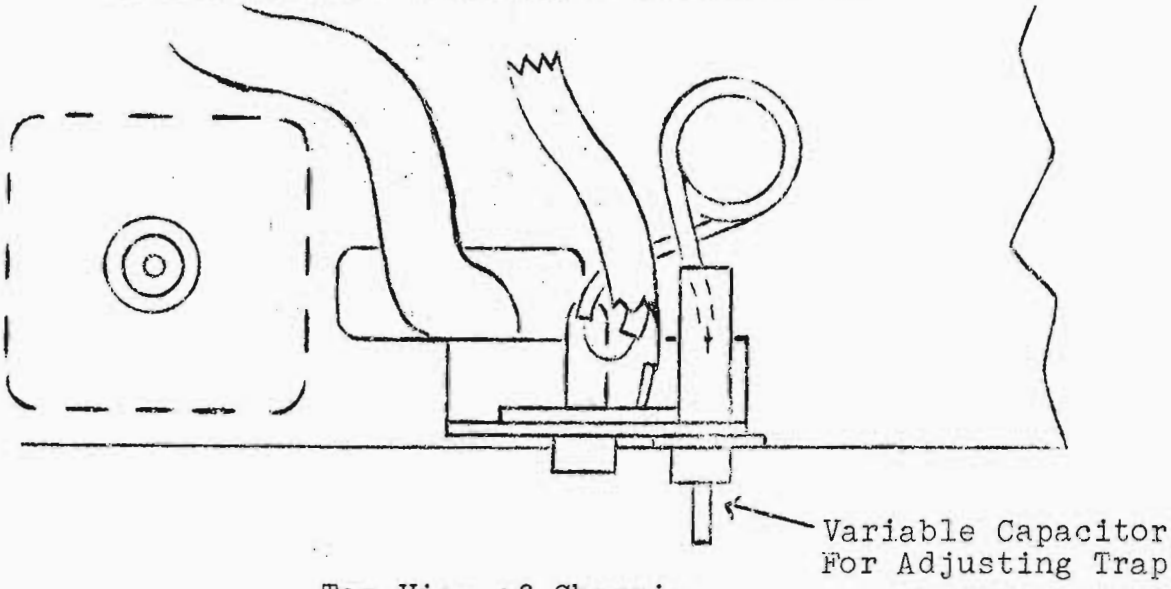

Top View of Chassis

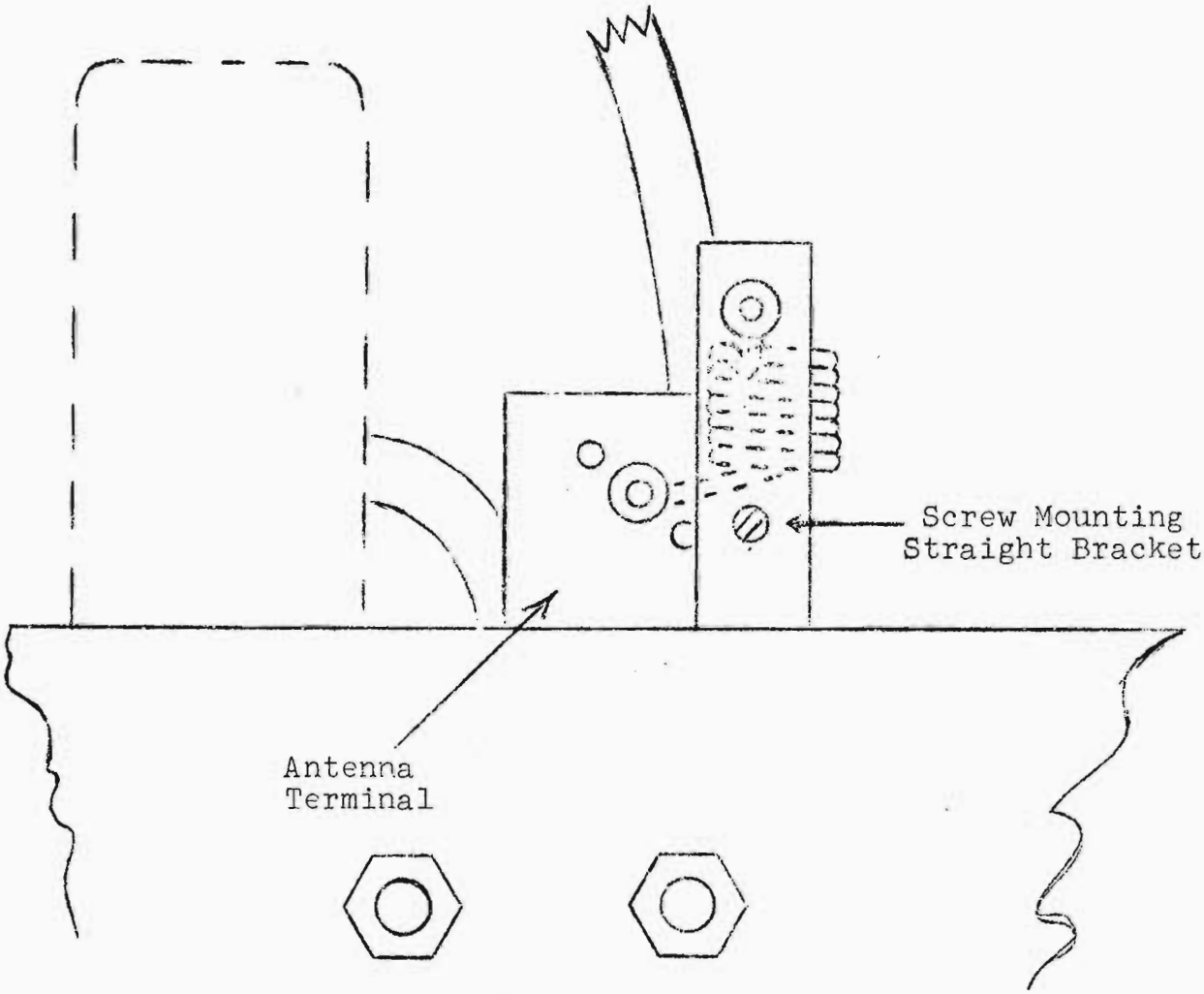

Rear View of Chassis

FM Series Trap - "L" Bracket Type

Used on RA-105A - RA-105B - RA-106 - RA-108A

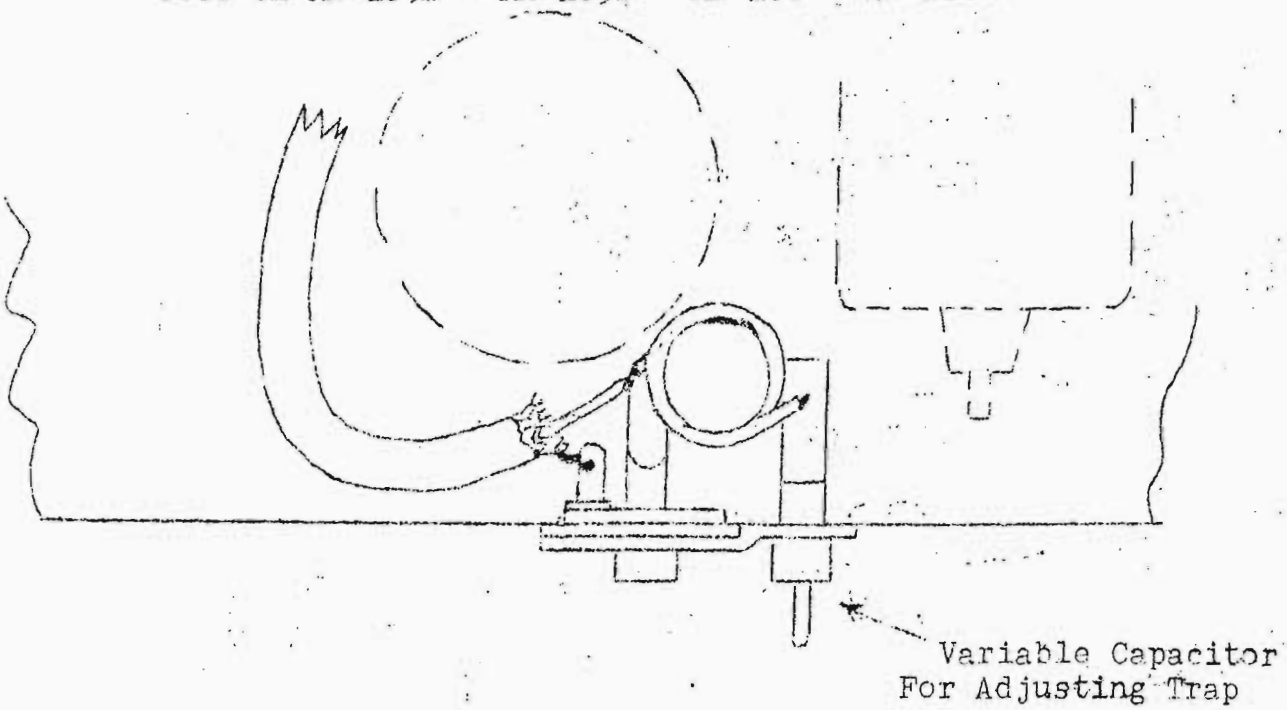

Top View of Chassis

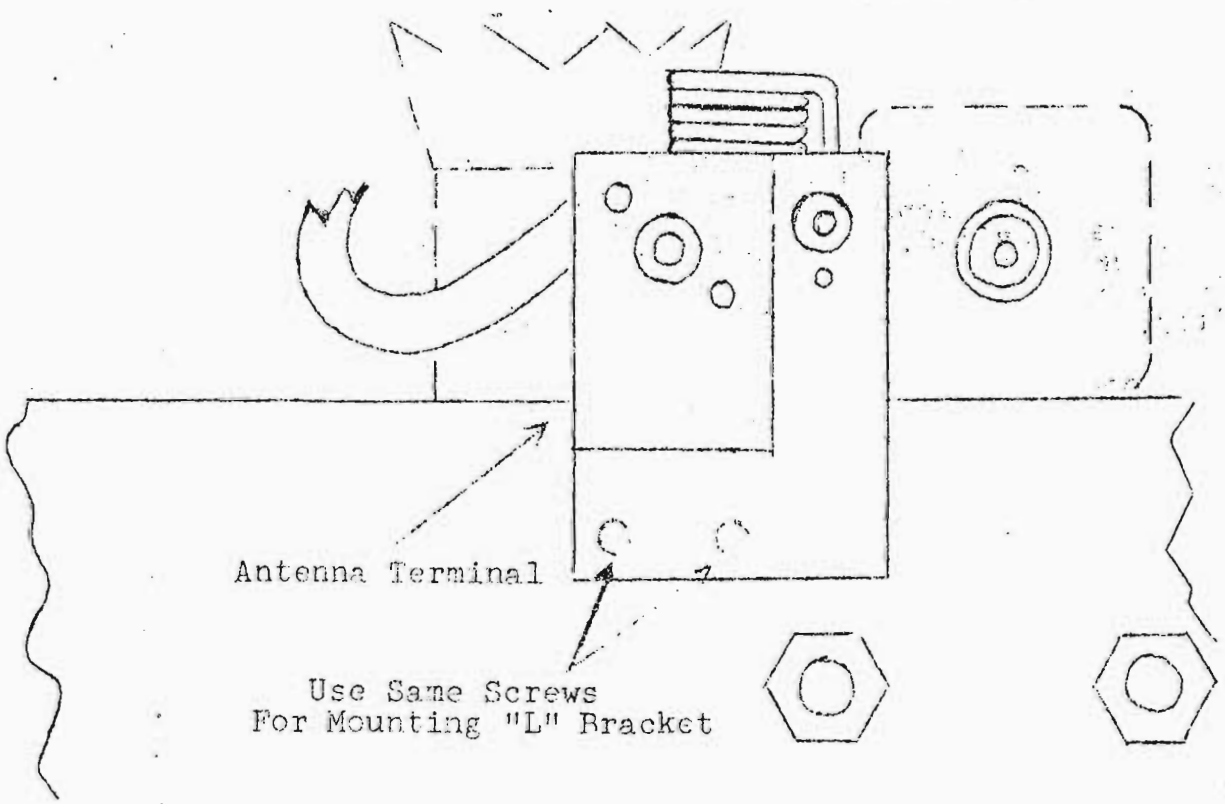

Rear View of Chassis

INSTALLATION SECTION

FM BAND ELIMINATION FILTER

For low signal areas which are affected by FM interference, an "M" derived band elimination filter is recommended because of the low insertion loss requirements. When properly adjusted, adequate attenuation of the entire FM band can be obtained with a minimum loss of video signal thus making this type of filter also very useful in locations where more than one FM station is causing interference. The recommended method for installation of the "M" deri band elimination filter is shown below.

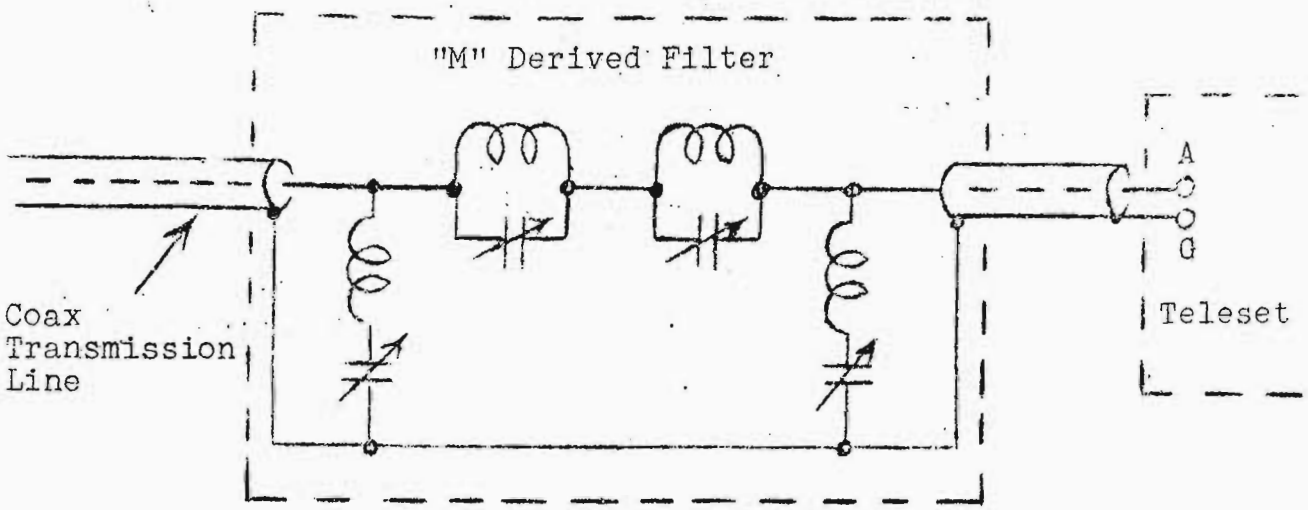

FM band elimination filters may be purchased from the Teleset Service Control Department. For convenience in installation, a 72 ohm coax output lead of sufficient length with male connector and a female input connector are provided. The complete unit can be easily mounted on the back panel of any Teleset model. Instructions for proper adjustment of the FM band elimination filter will be included with each filter.

Part No. 88000301 Price $6.00 each

INTERFERENCE FROM RADIO AMATEUR STATIONS

Interference to Telesets from Radio Amateur stations can usually be completely eliminated. To accomplish this elimination, it is very important that the Television Serviceman and the Radio Amateur co-operate with each other as much as possible.

To protect the Teleset from interference caused by the Amateur station, the serviceman should install a high pass filter in the antenna input to the receiver. The design of this filter should be such that frequencies above 40 mc pass without attenuation whereas those frequencies below 40 mc are greatly attenuated.

A high pass filter, designed for use with 72 ohm coaxial cable is available from the Teleset Service Control Department direct, or through your distributor. The part number for this filter is #88000331. The list price is $4.00 each.

If the use of this high pass filter does not completely eliminate the interference, it will probably be necessary for the amateur to take whatever steps are necessary to reduce the harmonic output of his transmitter.

Most amateurs are well informed as to the procedure to follow in order to make their "rig" as interference free as possible. However, if any amateur has difficulty in cleaning up his transmitter, he should be referred to the following reference book:

T V I
Television Interference
Its Causes and Cures

published by:

Radio Magazines, Inc.
342 Madison Avenue
New York 17, New York

The price of this book is $.50. It is available at most stores which handle radio communication equipment.

INSTALLATION SECTION

Experience in eliminating diathermy interference in its most severe form has dictated the following approach:

1. Check to insure that coaxial cable lead is in use. If not, install same.

2. Observe which TV channels show interference when the diathermy equipment is in operation.

3. Disconnect the antenna from the Teleset and short the antenna input terminals to ground. Again observe which channels show interference when the diathermy equipment is in operation. The interference which remains (if any) is being picked up directly by the wiring of the Teleset.

4. If interference is still observed, replace the AC line cord with a shielded line and ground the shield at each end and at any available points along its route.

5. If interference is still observed, insert an AC power line filter into the line between the Teleset and the shielded AC line cord. This filter should be tuned to the frequency of the interfering diathermy equipment (13.56 or 27.12 mc.). The circuit of an absorption type filter is as follows:

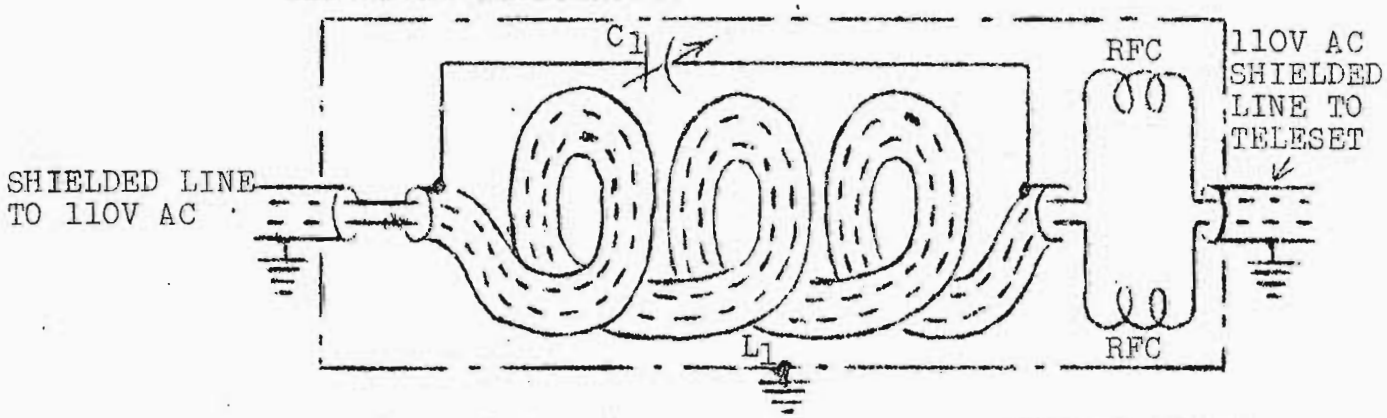

L_1 = 1 µh, 4½ turns, 3/8" copper tubing, 3" dia.
C_1 = 200 µµf var., air dielectric (for 13.56 mc.)
50 µµf var., air dielectric (for 27.12 mc.)

RFC = 5 µh, 40 turns, #16 solid enameled wire, closewound

Figure 2 shows the construction of this filter.

A more compact power line filter which is suitable for table model Telesets is shown in Figure 3. The circuit for this filter designed for 27.12 mc. is as follows:

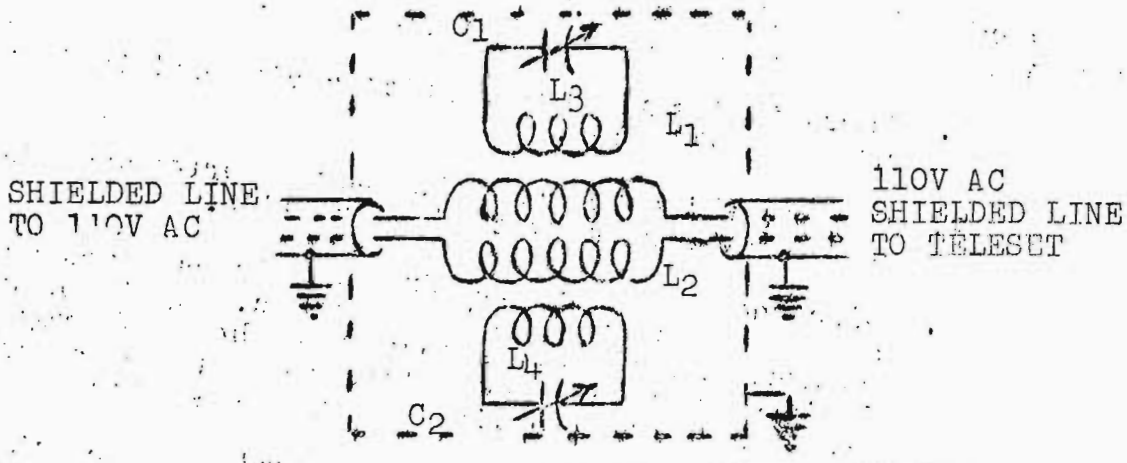

L_1, L_2 = 12 turns #18 insulated wire (O.D. = 3/32")
L_3, L_4 = 14 turns #12 solid enameled wire.
C_1, C_2 = 8 - 50 uuf ceramic (part number 03017500)

Note: L_1, L_3 and L_2, L_4 are interwound (bifilar) on ½" diameter, 2½" long form.

6. If interference still remains (antenna terminals still shorted):

   a. Move AC power line filter inside cabinet.

   b. Completely shield the interior and back of the Teleset Cabinet, including the record player compartment if incorporated in the Teleset. Use copper screen of 14 x 18 mesh, or finer. Staple in place and solder all seams. (A Bostich hammer is convenient for stapling.)

   c. Replace record player (if included) AC line cord with a shielded line. Ground the record player metal platform to the shielded pick-up lead and shielded AC line terminations. Also ground these shields at various points to the screen lining installed in the Teleset cabinet.

7. Remove short across antenna input terminals and reconnect the antenna. Check for any remaining interference. If interference is still observed, install a trap (tuned to the frequency of the interfering diathermy equipment) at the antenna input. The trap should be mounted inside of the Teleset if copper screening has been installed. If screening is not used, the trap should be installed in a metal box. The circuit of a parallel resonant trap is as follows:

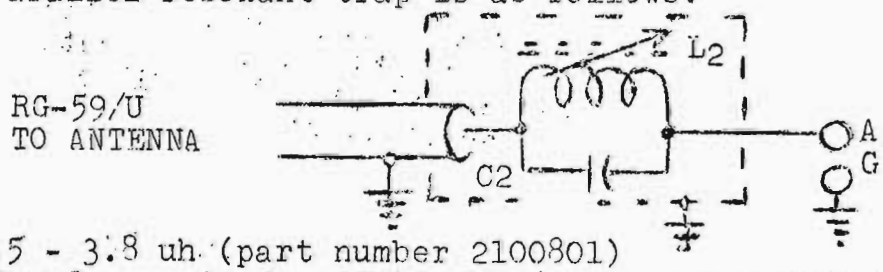

L_2 = 2.5 - 3.8 uh (part number 2100801)
C_2 = 10 uuf ceramic for 27.12 mc. (part number 03013080)
= 47 uuf ceramic for 13.56 mc. (part number 03012730)

The circuit of a series resonant trap is as follows:

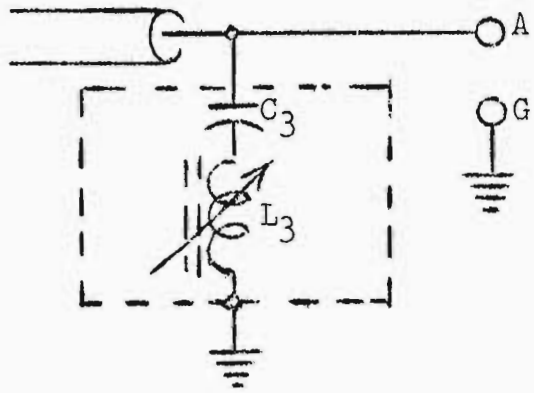

L_3 = same as L_2
C_3 = same as C_2

In some cases a series resonant trap may produce better results than a parallel resonant trap, or vice versa. Experiment will decide which is best in each individual case.

8. If any interference remains, install an open quarter-wave stub of RG-59/U directly across the antenna input terminals This stub should be fixed in place by stapling to a piece of cardboard, as shown in Figure 5. The length of the stub is approximately as follows:

Frequency	$\lambda/4$ Open Stub
13.56 mc.	143 1/2"
27.12 mc.	71 3/4"

Slight interference may remain on channels 2, 5, 9 and 13 due to their harmonic relation to 13.56 and 27.12 mc. It is also possible for images of harmonics to cause slight interference on channels 2 and 6, but this is not too common. Reduction of such harmonic interference should be attacked by separating the interference source as far as possible from the Teleset, its antenna and coaxial lead-in. Ground the latter at every convenient point along its path. A directional antenna with high front-to-back ratio often helps if the direction of the TV stations from the Teleset location permits orientation favoring the TV stations.

In the average case of diathermy interference not all of the above measures will be necessary. In the less severe cases there may be only antenna pick-up, which may be corrected by step 7 and/or 8. The complete procedure noted above will have to be resorted to only when the Teleset is located within a few feet of the diathermy equipment.

Figures 4 and 5 show an RA-108A Bradford modified in accordance with the complete procedure above. This Teleset was field tested in several adverse locations.

In one case, 28 miles airline from New York City, this Teleset displayed moderate interference on channels 2 and 5 (2nd and 3rd harmonic of 27.12 mc., respectively) and no interference whatsoever on channels 4, 7, 9, 11 and 13 when operated within three feet of a diathermy machine operating on 27.12 mc. A similar unmodified Teleset was unusable on any channel when the diathermy equipment was in use.

In another case, 8 miles airline from Philadelphia, this Teleset displayed absolutely no interference on any channel in use (3, 6 and 10) within fifteen feet of three diathermy machines operating on 27.12 mc. A similar unmodified Teleset displayed severe interference on all three of these channels when the diathermy equipment was in use.

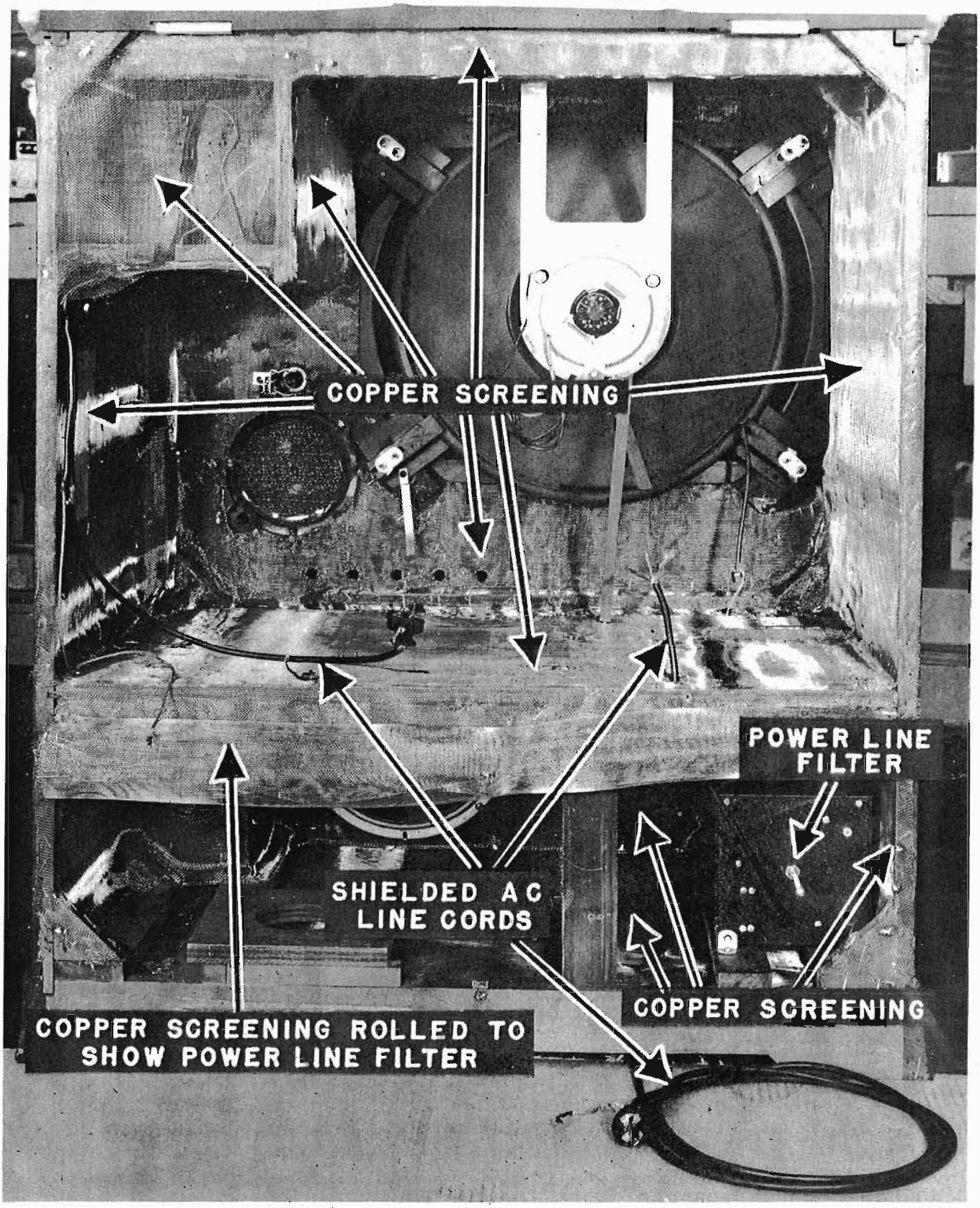
COPPER SCREENING
POWER LINE FILTER
SHIELDED AC LINE CORDS
COPPER SCREENING
COPPER SCREENING ROLLED TO SHOW POWER LINE FILTER

Figure 4

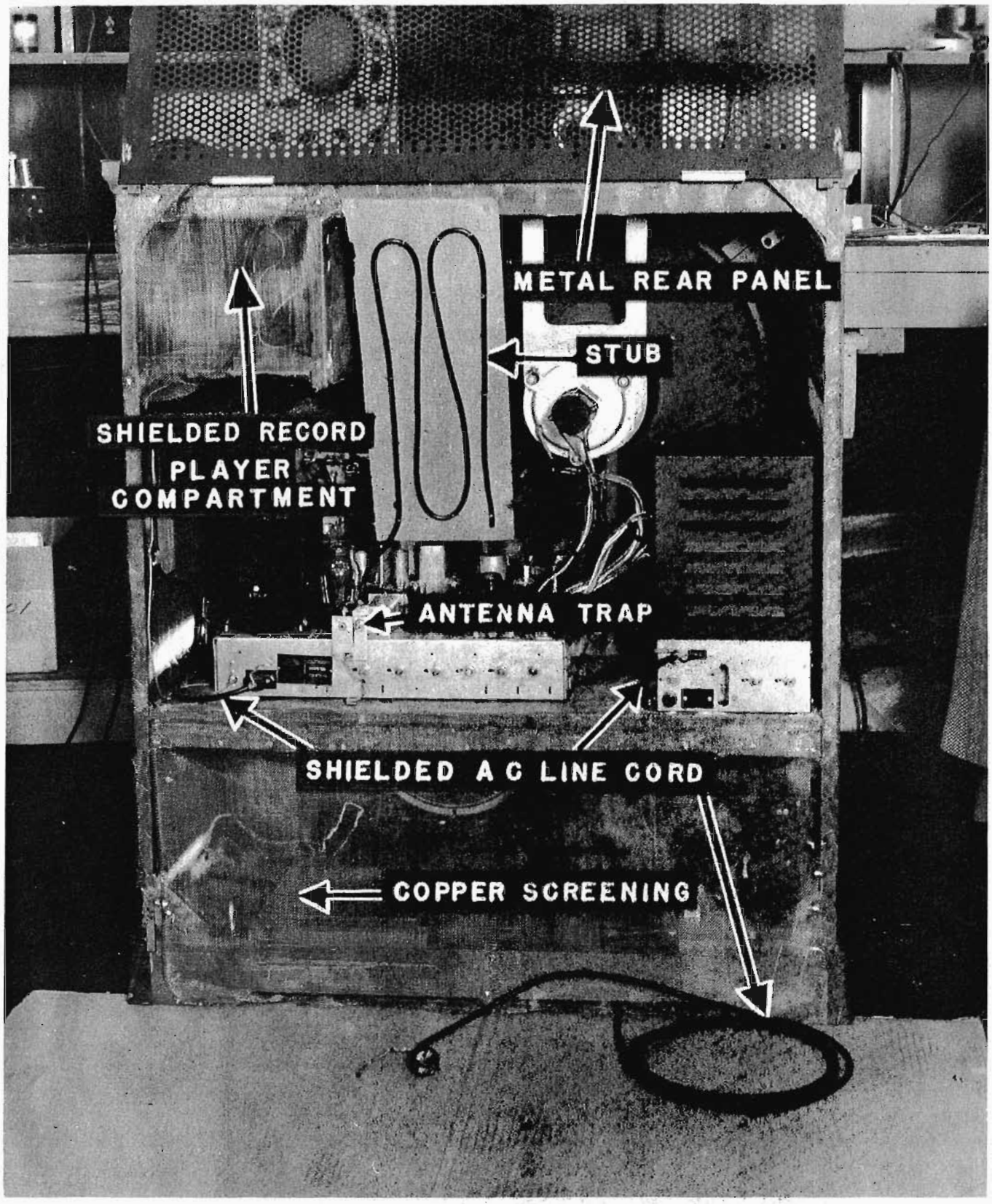
METAL REAR PANEL
STUB
SHIELDED RECORD
PLAYER
COMPARTMENT
ANTENNA TRAP
SHIELDED A C LINE CORD
COPPER SCREENING

Figure 5

Figures 6 and 7 show an RA-111A Putnam modified in accordance with the above procedure.

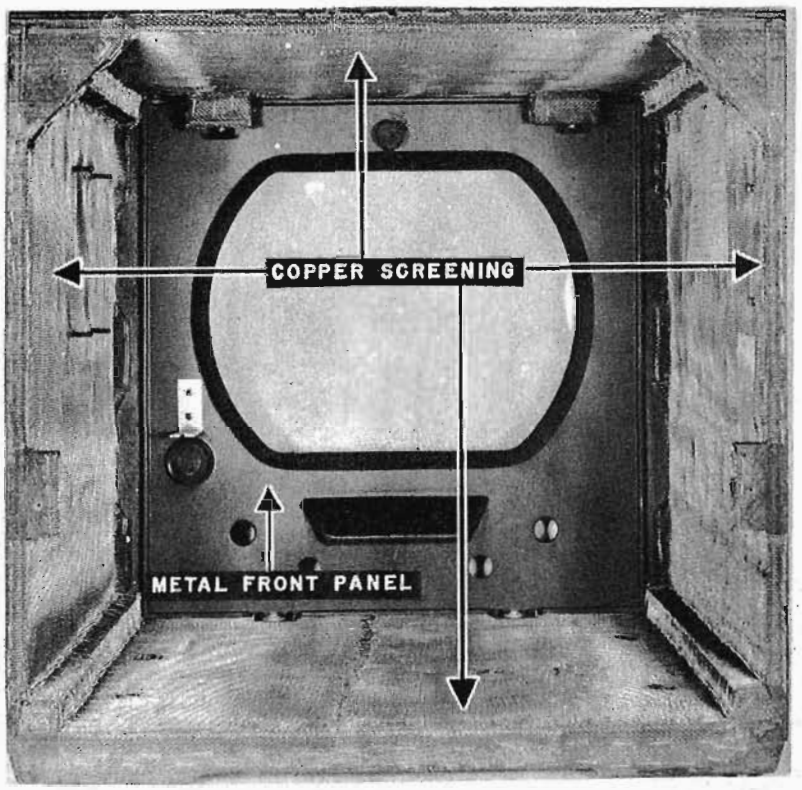

Figure 6

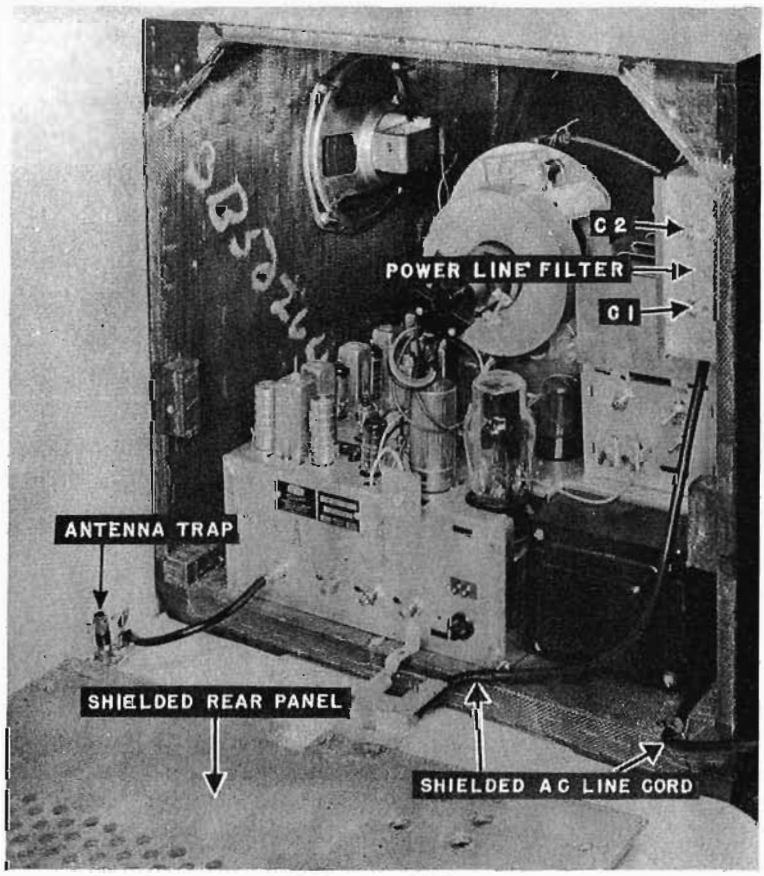

Figure 7

ANTENNA PLUG SOLDERING INSTRUCTIONS

Observations made over a long period of time indicate that many servicemen either do not know how or do not take the time to solder the antenna plug to the coaxial cable lead-in properly. If care is exercised to solder the antenna plug carefully according to the instruction tag included with each Teleset, many call-backs may be eliminated. Extreme care should be taken to avoid application of excessive heat to the polyethylene insulation. This will damage the insulation and increase the possibility of leakage and short circuit from inner conductor to ground.

The proper procedure for soldering the antenna plug to the coaxial cable lead-in is shown below:

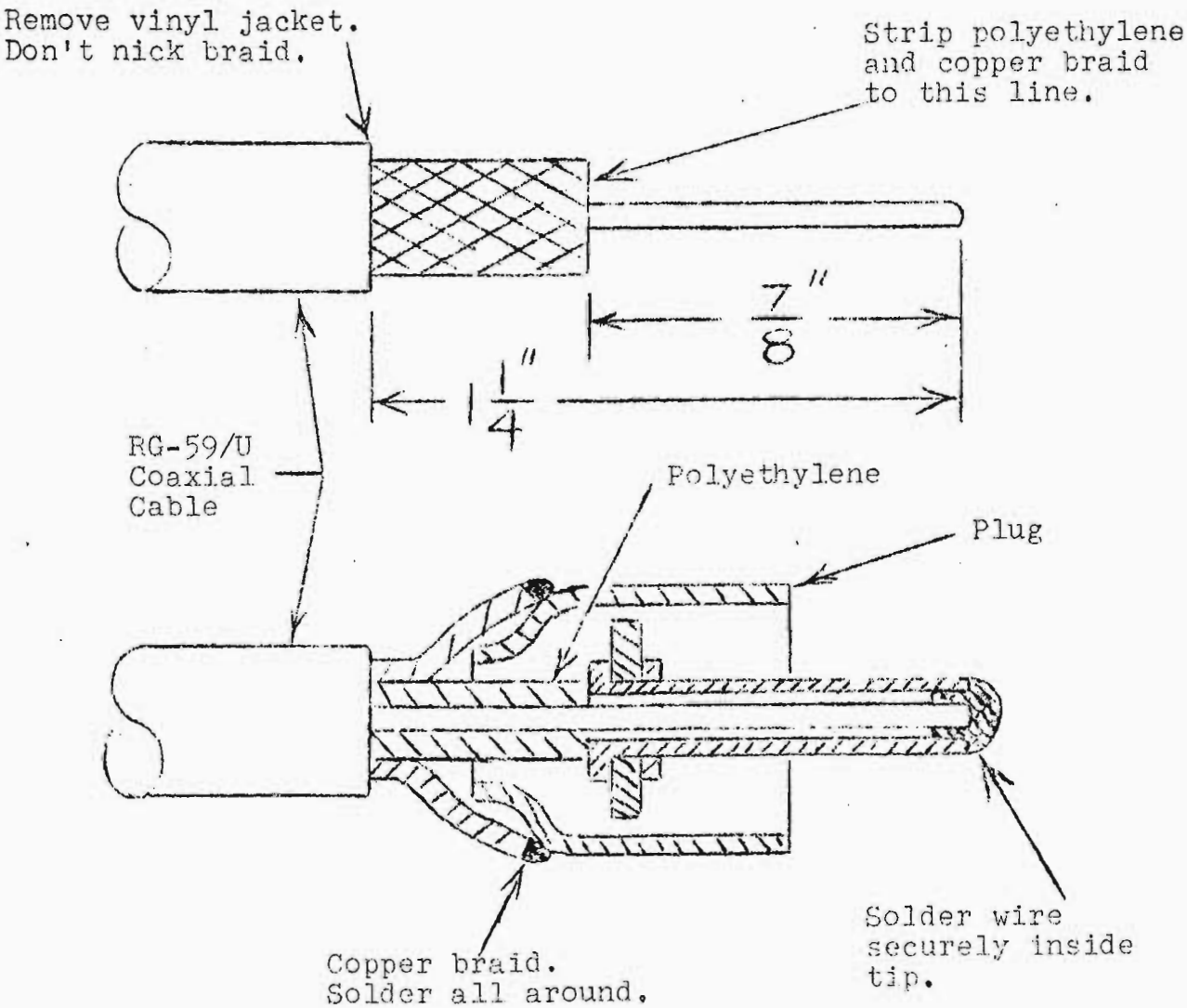

These connections must be soldered rapidly with hot iron to avoid damage to polyethylene insulation. Cable must be in line with body of antenna plug when soldering.

TELEVISION INTERFERENCE FROM INCANDESCENT LAMPS

An unusual and puzzling type of television interference when first encountered is that which is caused by incandescent lamps of the type shown in the following illustration. This bulb is the old type Mazda B bulb whose filament is a single wire draped zig-zag fashion on a glass post. The bulb shown in the illustration is in good working order and was found in the field to be producing the interference shown in the illustration on page 14-A.

Some of the known characteristics of this type of interference follows:

1. The interference usually appears on the lower television channels, usually channels 2 through 5.

2. The interference pattern shown remains stationary and is in synchronism with the vertical sweep signal. (This may not be true in all cases, but is true of the bulb we have.)

Short articles on the cause for this interference have appeared in recent issues of Electronics Magazine. The first article appeared in the December, 1949, issue. Subsequent letters claim that it is a form of Barkhausen Oscillation.

To the serviceman, a knowledge of how to eliminate the interference is of more importance than the academic reason for its existence. Therefore, a search for a similar light bulb is in order upon the appearance of the interference.

The light bulb shown in the illustration was found in the attic of the house in which the Teleset was installed. We do not know however, the distance over which the bulb can radiate.

We would like to hear from you men in the field regarding any experience you may have had with this form of television interference.

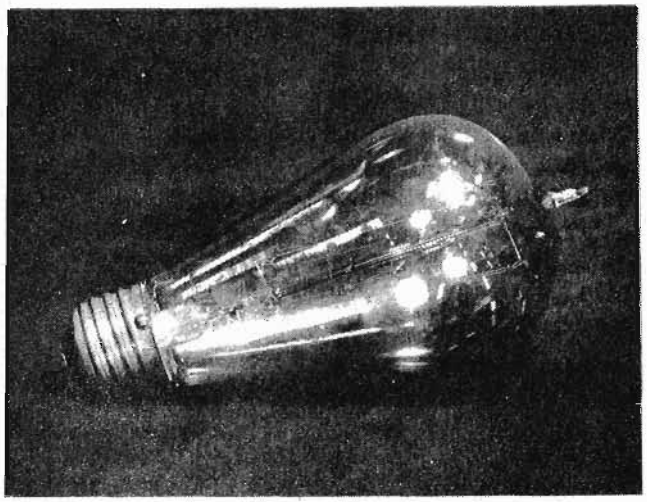

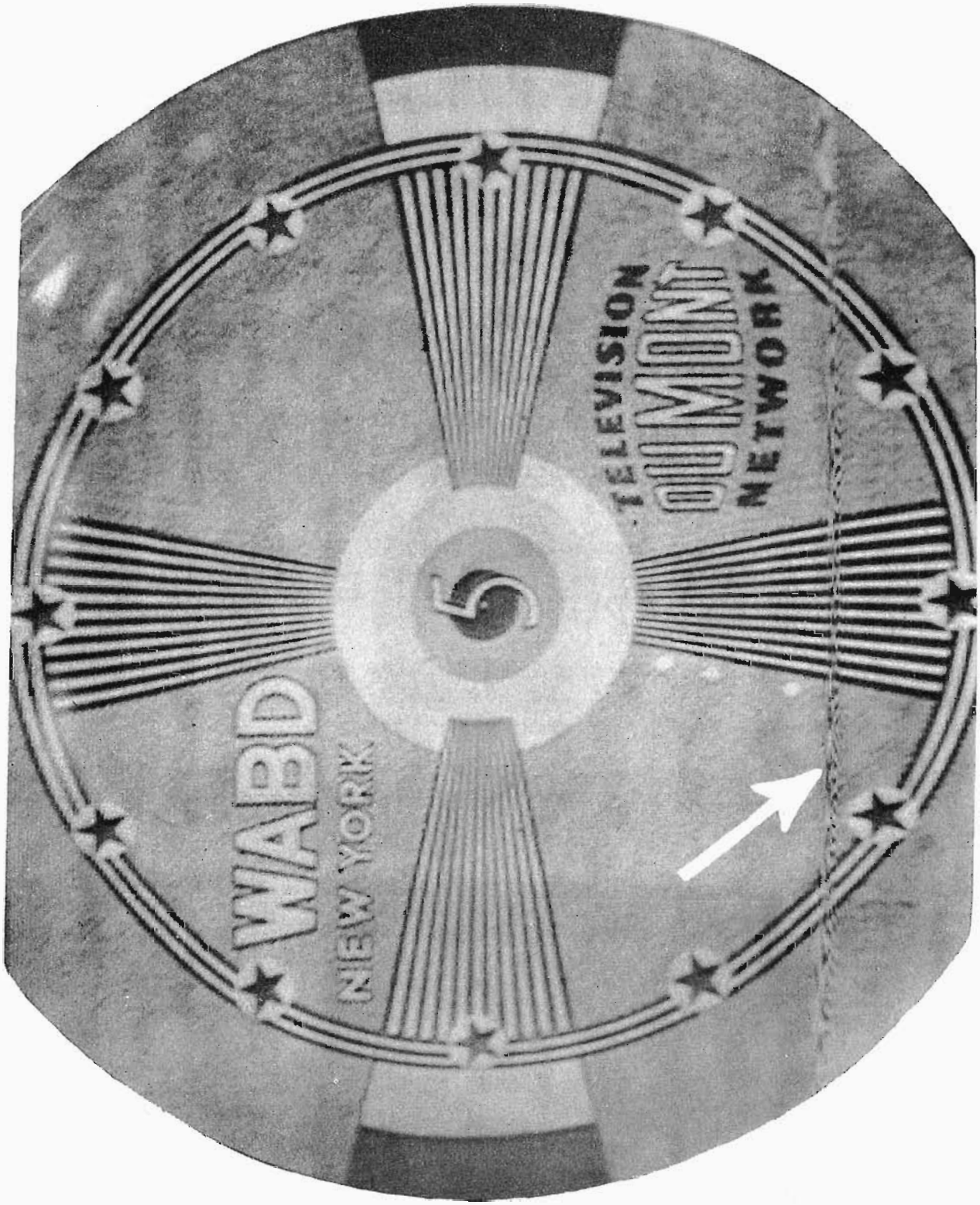

INTERFERENCE PATTERN CAUSED BY INCANDESCENT LAMP

TELESET SERVICE POLICY LETTER #1

SUBJECT: GENERAL POLICY REGARDING SERVICING OF DU MONT TELESETS

The policy of the Allen B. Du Mont Laboratories regarding servicing of Du Mont Telesets is as follows:

1. Du Mont will do no actual servicing of Telesets in the field except when investigation indicates that the regular facilities of our distributors, dealers, or service organizations have been unable to give satisfaction to a customer. Whenever Du Mont field service representatives or factory servicemen work on an individual Teleset, they shall be accompanied and assisted by a regular service representative of the distributor or dealer concerned.

2. Where sales within a specific territory are handled by a distributor, the distributor shall be responsible for all installation and maintenance work carried out in his territory. He shall insure that dealers have adequate shop facilities, instruments, parts and trained personnel available at all times, or that they have service contracts with approved Du Mont service organizations. He shall make recommendations to Du Mont regarding approval of additional service organizations in his territory, as well as the removal of such organizations from the approved list as he may have reason to believe cannot meet Du Mont standards. Distributors shall provide and maintain a well equipped service shop of their own under a competent service manager. Such shops shall have facilities for repair and alignment of Telesets and shall be available to the dealers in the territory at all times. They shall also maintain an adequate supply of parts, chassis and tubes to supply all of their dealers and service groups. Distributors shall maintain records of all complaints received concerning their dealers and service organizations and shall, by means of periodical inspections of facilities and spot checks of typical installations, insure that their dealers and service organizations are maintaining the high standard of work which we expect and which is so necessary for the continuance of the prestige of the Du Mont line. Distributors should have, in addition to the service manager, at least one competent field engineer whose responsibility will be the inspection of dealers and service company service facilities and carrying out the spot checks mentioned above. Prompt corrective action should be taken whenever it is learned that a dealer has failed to fulfill his obligations as regards prompt, courteous and, above all, competent service.

3. Independent dealers, in non-distributor territory, shall, in accordance with their franchise, be responsible for the furnishing of adequate installation and service facilities. In general, it is desirable that dealers maintain their own service departments to install and maintain all sets sold by them. When, for any reason, dealers are unable to, or do not desire to carry on their own service departments, they shall contract with a Du Mont approved service organization to carry out all such installation and service work, but the responsibility for such work shall still rest with the dealers. Whenever it is apparent that service organizations are not performing satisfactorily, it shall be the dealers' responsibility to so report to Du Mont.

4. The Allen B. Du Mont Laboratories, for the purpose of insuring adequate service to the owners of Du Mont Telesets, will maintain a department known as the Teleset Service Control Department. The function of this Department will be to furnish necessary field representative service to assist the distributors, dealers and service organizations in the establishment and operation of their service groups. This department will also handle the sale of all spare parts to distributors, independent dealers and service organizations the registration and warranty of all Telesets sold in the field; the issuance of credits for return of parts on merchandise under the terms of the Du Mont Warranty; the repair of chassis or sets beyond the capacity of our field organizations; the preparation and issuance of all technical service literature, manuals, schematics and service notes and for the training and instruction of servicemen through courses at the Du Mont Service School and by means of lectures in the field.

5. The present organization of the Teleset Service Control Department is shown on the following page.

TELESET SERVICE CONTROL DEPT.

ORGANIZATION CHART

August 15, 1950

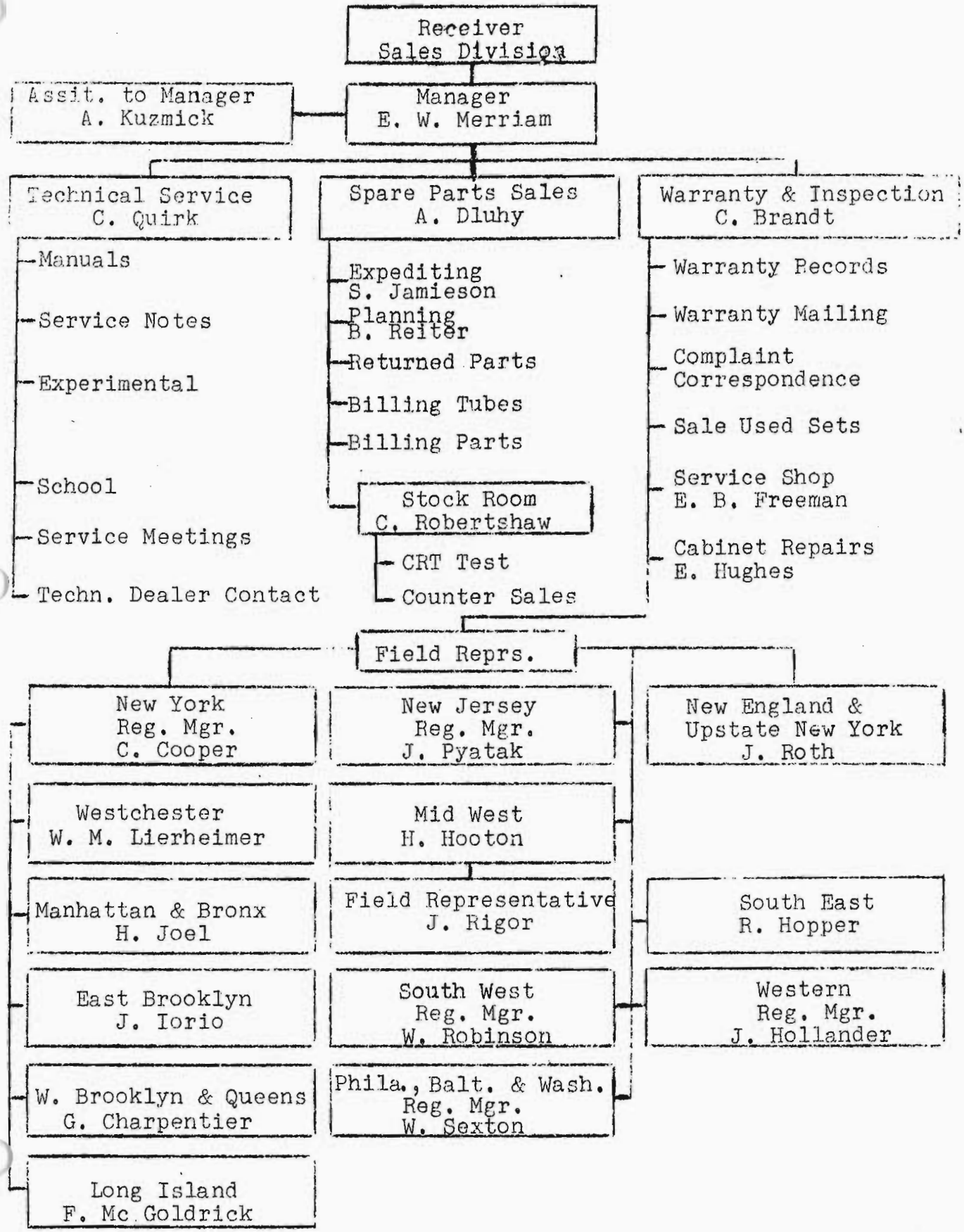

TELESET SERVICE POLICY LETTER #2

SUBJECT: EQUIPMENT AND PERSONNEL REQUIREMENTS

In order to carry out the general policies regarding television service which were set forth in Teleset Service Policy Letter #1, it is essential that distributors, dealers and service organizations provide themselves with adequate equipment and personnel.

Each distributor should have a competent service manager responsible for all service matters in the territory. The service manager should be charged with the responsibility for answering all complaints received by the distributor or referred to him by Du Mont, regarding sets in his territory, and for insuring that prompt action is taken in regard to such complaints. He should also have charge of the Parts Sales Section of the organization and should be made responsible to see that an adequate stock of parts is maintained by the distributor at all times. This is necessary in order that prompt replacement may be made to the dealers in exchange for parts which fail under guarantee, as well as for sales of replacement parts to dealers and service organizations in the territory for replacement of parts which fail in sets out of guarantee. If such adequate stock of parts is maintained and sold at reasonable prices, a very substantial source of income is available to the distributor, since many service companies, although not authorized by Du Mont for regular service work, eventually assume the responsibility for servicing sets in their neighborhood after the initial warranty or service contract has expired. Du Mont has no objection to the sale of parts to such unauthorized dealers, since it assists, indirectly, in the proper servicing of our sets. Proper repair of sets in the field is dependent upon prompt replacement of parts and the necessity for a good stock room and shipping facilities cannot be overemphasized.

The service manager should have as an assistant, an outside field representative whose duty should be that of visiting all dealers and prospective dealers in the territory, to insure that service equipment in the dealer's shops is adequate and that personnel is properly trained and capable of giving proper service to Du Mont set owners. He should spend the majority of his time on the road, should investigate promptly any reports received which indicate poor service in a given area, and should see that the causes for such reports are corrected or eliminated. The service manager and his field assistant should both be competent technicians as well as being sales minded. They should make every effort to convince dealers that future sales in dealers' territories depend to a large extent on proper installation and service on present sales.

DISTRIBUTORS' FACILITIES.

Each distributor should have a service shop with one or more benches to handle repair of chassis which may be beyond the ability of the dealers in the field. The following instruments are considered minimum equipment for shop use:

1. OSCILLOGRAPH - Du Mont 208B or 304H.

2. SWEEP GENERATOR - Hickok type #610A with built-in marker generator is recommended. The Kay Electric Mega-Sweep and RCA WR-59A, are also recommended, but do not have a marker generator, markers usually being fed from an external signal generator or calibrator such as the Megaliner or RCA WR-39A

3. SIGNAL GENERATOR - The signal generator is necessary to make sensitivity measurements and to furnish accurate markers to the sweep generator if a marker unit is not available. The Ferris 18-Fs, or the Measurement's Corp. #80 is recommended.

4. VACUUM TUBE VOLTMETER - The vacuum tube voltmeter should have AC and DC voltages from 0-500 volts and be equipped with high impedance probe. RCA 195 Volthmyst or similar type is recommended.

5. VOLTAGE CALIBRATOR - The voltage calibrator is very necessary and is used to measure the amplitude of sync pulses and other signals in the receiver. It is used with the cathode-ray oscillograph for measuring the amplitude of any waveform. The Du Mont Type 264A is suitable for use with any make oscillagraph.

6. HIGH VOLTAGE METER - Beta Electronics type is recommended or adapter for RCA Voltohmyst.

The distributor should make his shop available to his dealers service organization and should permit them to bring chassis to him for joint study and repair, or alignment. There it is necessary to perform extensive repairs because of improper servicing on the part of the dealer, the distributor should charge the dealer on a time and material basis for such repairs. This will prevent unnecessary expenditures on the part of the distributor and at the same time will encourage the dealers to improve their own service facilities.

Distributors may find it desirable to have a large truck equipped as a mobile repair and test shop. By providing adequate shelf space within the truck body, a well equipped repair shop can be provided capable of visiting any part of the distributor's territory. A mobile shop of this type should carry its own collapsible antenna mast and power supply. An alternate means of power supply would be a reel of several hundred feet of twin conductor to permit use of a line supply from a dealer's shop or individual home. The ability to make reception surveys or to render special service within any part of the distributor's territory with a minimum delay makes this investment well worthwhile.

DEALERS AND SERVICE ORGANIZATIONS' FACILITIES

In general the instrument requirements for a dealer's service shop should be similar to that of the distributor. The number of benches should be governed by the number of sets under guarantee or service contract. There should be sufficient bench facilities and servicemen to insure that all service calls are answered within twenty-four hours and that normal repair work is completed within forty-eight hours after receipt except in cases of extensive repair or replacement.

Large service organizations performing a considerable amount of installation and service work for dealers in cities or areas where distributor's facilities are not available, should have equipment similar to that prescribed for the distributor. A minimum of equipment on each repair bench should be an oscillograph, voltohmyst and a voltage calibrator.

All service organizations and servicing dealers should have properly equipped trucks, specially designed to carry instruments, tools, parts and chassis. Special racks having sponge rubber pads on bottom and side should be provided to carry chassis with minimum vibration and shock.

Side and top racks should be provided on the trucks to carry extension ladders for antenna installation work. The most desirable ladder for this use is the light alloy metal extension type of which several make are now available on the market. Installation crews should be warned, however, in using these ladders to avoid contact with high voltage lines in the vicinity of their work.

Each truck should be supplied with a Du Mont Rumson test set, and should have a set of sound powered telephones for intercommunication purposes. The test set is required for survey work and the telephones are absolutely necessary in the location, orientation and height adjustment of antennas during survey and installation.

Each truck should carry several compartmented boxes. One box should have padded compartments to accomodate various types of vacuum tubes. A second box should have spaces for carrying stains, polish, shellac stick, spatula, alcohol lamp, polishing cloths and other materials used in cabinet repair and refinishing. A third box should be well equipped with all types of tools necessary for electrical work on the Teleset itself, as well as for the installation work on antenna masts, wire running and coaxial installation. A metal strapping tool for securing masts to chimneys is a very handy tool. Another tool which should be included on every truck is a quick heat soldering gun.

PERSONNEL

In choosing personnel for field work, distributors, dealers and service organizations should select only high calibre men. Since our sets are sold as the "finest in television", our Teleset owners expect and are entitled to above average servicing. Television servicemen should be neatly dressed, well-mannered, technically competent, tactful and close-mouthed. Many complaints received by distributors and by the manufacturers' sales division, are brought about inadvertently by careless statements made by servicemen. They should be cautioned to avoid any conversation with the set owners involving a description of troubles which may be discovered in the set, or recommendations by the service men. On performing repair work, should the serviceman find a condition which would warrant an exchange of the set or a replacement of a major part, he should report this promptly to his service manager in order that proper action may be taken, but he should not inform the customer as to his intended recommendations. Servicemen should be cautioned never to compare the customer's present set with other sets either of the same manufacture or those made by other manufacturers. His only job is to see that the set upon which he is working is made to function properly and that the customer is satisfied with the results.

It should be remembered by everyone in the organization from the distributor down, that the principal requisite for a successfully operating television receiver is a proper installation. A set may be in perfect condition, capable of giving excellent pictures, but if the installation is made in a haphazard manner, and the customer is left with mediocre reception, he will never be satisfied with the set, and the reputations of the manufacturer, the distributor, the dealer and the service company will suffer. Many service calls and complaints which are received daily could have been avoided, if a little more time had been devoted to making the initial installation a satisfactory one.

Servicemen in answering a service call should not only repair or replace the particular part responsible for the trouble, but should avail themselves of the opportunity thus presented to check the entire set for other mechanical or electrical weaknesses. Such a check will eliminate many unnecessary future calls, will reduce service expenses, and will in turn increase profits.

Television servicemen should be carefully chosen and specially trained. Every distributor, dealer and service organization must have at least one key man in the service organization who has been trained in the Du Mont Service School, and has been certified as a Du Mont repair man. Distributors should encourage all dealers and service organizations from time to time to send additional men to the Du Mont School for instruction and certification.

The service manager of each dealer's shop or service organization's shop, should be in complete charge of service operations. He should plan the day's work and schedule for the trouble-shooters, answer calls from the field, solve the serviceman's problems by telephone, assist the trouble-shooters in repairing and testing Telesets in the shop and insure that prompt and efficient service is rendered to all customers.

RECORDS

Complete records should be maintained of all service calls, individual case histories maintained on each set, and periodical reports made to Du Mont concerning failure of parts, recommended changes and reports of unexpected service troubles. Whenever a field serviceman goes to repair an individual set, he should have with him a copy of the case history of that particular set in order to assist him in his diagnosis and repair. Each case history should contain full information as to parts which have been replaced, changes or alterations made, and other pertinent facts regarding its operation.

In reporting difficulties encountered in the field, particularly when the trouble is other than of a routine nature, Teleset Service Control form No. 876 "Teleset Failure Report" should be used. All requests for information or assistance in connection with service problems should be addressed to the Manager, Teleset Service Control Department, Allen B. Du Mont Laboratories, Inc., Market Street, East Paterson, New Jersey.

TELESET SERVICE POLICY LETTER #3

SUBJECT: RESPONSIBILITY FOR PROPER INSTALLATION AND SERVICE

1. In order to eliminate confusion in the minds of distributors, dealers and service organizations, regarding their responsibility in connection with the sales, installation and servicing of Du Mont Telesets, the following pertinent extracts from the indicated documents are quoted for the information and guidance of all concerned:

2. The current Du Mont Teleset and Teletron Warranty reads as follows: "Allen B. Du Mont Laboratories, Inc., herein referred to as "Du Mont", warrants to the first purchaser for use of this Teleset that for a period of ninety (90) days from the date of its purchase from an authorized Du Mont dealer, this Teleset is free from defects in material or workmanship. If service is required within such ninety (90) days, it should be requested of the authorized Du Mont dealer from whom this Teleset was purchased. Du Mont has agreed with its authorized dealers that it will repair or replace, F.O.B. Du Mont's factory, any part which, under normal use and service, proves to be defective in material or workmanship within ninety (90) days after purchase date. This warranty does not apply if such purchaser of this Teleset has neglected, misused, improperly operated or damaged it, accidentally or otherwise, or if it has in any way been tampered with, altered or repaired by any person other than an authorized Du Mont dealer or authorized Du Mont service organization, or if its serial number has been altered, defaced or removed.

Du Mont also warrants the Teletron (direct view cathode-ray tube) originally installed in this Teleset to be free from defects in material or workmanship under normal use and service for one year from the date of the purchase of the Teleset from an authorized Du Mont dealer. If said Teletron does not render satisfactory service during the period of such warranty, the authorized Du Mont dealer from whom this Teleset was purchased should be requested to examine the same. No Teletron claimed to be defective in material or workmanship is to be returned to Du Mont unless authorization in writing for such return is received from Du Mont. The obligation of Du Mont under this warranty of said Teletron is limited to its repair and return or replacement, in either case F.O.B. Du Mont's factory, if it is found upon inspection by Du Mont at its factory to be defective in material or workmanship. This warranty does not apply if the purchaser of said Teletron has neglected, misused, improperly operated or damaged it, accidentally or otherwise, or if it has in any way been tampered with, altered or repaired by any person other than an authorized Du Mont dealer or authorized Du Mont service organization, or if its serial number has been altered, defaced or removed. This warranty applies solely and exclusively to the Teletron installed within the Teleset at the time of its original purchase, and does not apply to subsequent Teletron installation, which will carry the standard Du Mont warranty applying to such cathode-ray tubes.

No warranty, express, implied or statutory, is made by Du Mont with respect to this Teleset or Teletron, other than as stated above. No person, firm or representative is authorized to assume any obligation or make any guarantee on behalf of Du Mont other than as stated above.

This warranty has been registered at the Teleset Service Control Department, East Paterson, New Jersey."

3. Paragraph 4 of the Distributor's Franchise Agreement reads as follows: "The distributor shall maintain an adequate sales organization, shall maintain or provide for the maintenance of an adequate service organization qualified to install, service and repair Telesets, and, without limiting the generality of the foregoing, shall, directly or otherwise, provide without charge such labor or other services as may be required properly to service and repair each Teleset sold by distributor's dealers in the hands of the first purchaser thereof for use, in accordance with and during the period covered by Du Mont's standard published Teleset and Teletron (cathode-ray tube) warranty in the form then current, such labor or other services to include the installation of repaired or replacement parts furnished by Du Mont under such warranty."

4. Paragraph 8 of the Dealer Franchise Agreement is quoted herewith: "The dealer agrees: (A) To maintain a representative adequate sales organization; to maintain or provide for the maintenance of an adequate service organization qualified to install and service Telesets and appurtenances; to maintain a representative and adequate stock of Telesets and appurtenances (including Du Mont replacement parts); to use its best efforts to sell and promote the sale of Telesets and appurtenances; to display prominently Telesets at dealer's place of business. The dealer agrees that it will discontinue immediately upon receipt of written notice from Du Mont any of the dealer's advertising in connection with Telesets which in Du Mont's sole judgment Du Mont may find objectionable in any respect; (B) To provide service in connection with the sale, installation, maintenance and operation of Telesets and of appurtenances which shall have been sold by it as follows:

(1) The dealer shall take or cause to be taken such steps and make such surveys as shall be necessary to ascertain the practicability of proper operation and signal reception by Telesets as the homes of such of its prospective customers who place orders with the dealer for the purchase of Telesets.

(2) In the event that such surveys indicate that Telesets will operate properly and their signal reception will be satisfactory at the home of such prospective customer and the customer purchases the Teleset, the dealer shall install or cause to be installed the Teleset at the customer's home and put the same in operation, including the erection and connection of the antenna.

(3) After such installation the dealer shall, directly or otherwise, provide free of charge such labor or other services as may be required to fulfill Du Mont's printed ninety-day warranty running to the original customer on such Teleset, such labor or other services to include the installation of repaired or replacement parts furnished by Du Mont under the said warranty.

(4) The dealer shall also install, or cause to be installed, such cathode-ray tubes of Telesets sold by the dealer which Du Mont is required to replace or repair in accordance with Du Mont's printed cathode-ray tube warranty on such Teleset running to the original purchaser thereof.

(5) The dealer shall directly or otherwise, furnish or provide at reasonable charges to its customers of Telesets any and all services not provided for in the foregoing provisions which are necessary for the proper operation of Telesets installed by the dealer.

(6) The dealer agrees to cooperate with authorized representatives of Du Mont in enabling such representatives to inspect from time to time all installations of Telesets made by the dealer, and the dealer agrees that in the event such inspections indicate improper installation or failure on the part of the dealer to comply with its obligation to service as hereinabove provided, the dealer shall upon receipt from Du Mont of reports of improper installation or servicing promptly take such steps or cause such steps to be taken as shall be required or designated by Du Mont to correct such installations and provide proper servicing, it being understood that nothing contained in the foregoing provisions of this sub-paragraph '(6)' shall be deemed to impose any obligation whatsoever on Du Mont either to inspect or make any reports of such inspections to the dealer or to repair or to furnish any services whatsoever on any Telesets or appurtenances installed or serviced by or for the dealer, and it is further understood that nothing contained in the foregoing provisions of this sub-paragraph '(6)' shall be construed as a limitation upon the obligations of the dealer as set forth in the next preceding sub-paragraphs '(1)' to '(5)' inclusive.

(7) The dealer shall render such additional services as may be necessary to conform to the policies and standards relating to the servicing of Telesets which Du Mont may establish from time to time for its Teleset dealers."

5. Paragraphs 2, 4, 5 and 7 of the Teleset Servicing Agreement are also quoted herewith: "Du Mont agrees that, as between Du Mont and authorized retail Teleset dealers, it will consider that any such dealer has performed its obligations in connection with the installation and servicing of Telesets if such obligations be performed by the service company while this designation is in effect; provided, however, that no charge shall be made to any customer of any such dealer for such labor or other services as may be required to fulfill Du Mont's ninety-day warranty running to the original purchaser of each Teleset, such labor or other services to include the installation of repair or replacement parts furnished by Du Mont under the said warranty, but all such charges shall be billed direct to and paid by such dealer.

As between Du Mont and the service company, the service company shall be considered to be acting for the authorized retail Teleset dealer involved in each instance. The service company is not authorized to act or hold itself out as an agent of Du Mont nor to use the name "Du Mont" in any way except to indicate that the service company has been approved as a service company by Du Mont.

The service company agrees: (a) To maintain an adequate service organization qualified to install and service Telesets and appurtenances thereto, to maintain a representative adequate stock of spare parts for Telesets and such appurtenances sufficient to enable it to offer rapid and efficient installation and repair service to Teleset owners; to abide by all instructions and rulings issued from time to time by Du Mont relative to the installation and servicing of Telesets; to maintain at all times the standards of quality set by Du Mont for the installation and servicing of Telesets; to the extent that they

are available, to use only Du Mont parts in servicing Telesets. (b) To furnish or provide at reasonable charges to authorized retail Teleset dealers and to Teleset owners such services and parts as may be necessary or desirable for the proper operation of Telesets. (c) To maintain complete records of the installation and servicing of each Teleset that it may install or service, including the name and address of the owner and the place of installation, the serial number of the Teleset and the dates of such installation and servicing, as well as the nature of the servicing required in each instance, and to furnish such data to Du Mont upon request, together with all other data pertaining to Teleset installations and servicing and to relations with authorized retail Teleset dealers; (d) To furnish Du Mont, in such form and detail as Du Mont may request, with complete and detailed field reports on Teleset performance, breakdowns and repairs weekly and at such other times as Du Mont may request; (e) To cooperate with authorized representatives of Du Mont in enabling such representatives to inspect, from time to time, its service facilities, all installations of Telesets that it may make, any and all of its books and records pertaining to the installation and/or servicing of Telesets and any other matters properly of interest to Du Mont. The service company agrees that, in the event that such inspections indicate improper installation or servicing, the service company shall, upon receipt from Du Mont of any report of such improper installation or servicing, promptly take such steps or cause such steps to be taken as shall be required or designated by Du Mont to correct such installation to Du Mont's uncontrolled satisfaction and to provide proper servicing, it being understood that nothing contained in the foregoing provisions of this sub-paragraph '(e)' shall be deemed to impose any obligation whatsoever on Du Mont either to inspect or to make any reports of such inspection to the service company or to repair or to furnish any service whatsoever on any Telesets installed or serviced by the service company, and it is further understood that nothing contained in the foregoing provisions of this sub-paragraph '(e)' shall be construed as a limitation upon the obligations of the service company as set forth in the next preceding sub-paragraphs '(a)' to '(d)', inclusive. (f) In the event that the service company is located in an area in which Teleset distribution is handled by an exclusive distributor now or hereafter franchised by Du Mont, the service company agrees that (I) all spare parts will be purchased by the service company from such distributor and that (II) the service company will be guided by and adhere to all policies, not inconsistent with Du Mont's policies on such matters, established by the distributor in regard to dealer and customer relations.

The service company further agrees to submit to Du Mont for its approval all forms of agreements with Teleset purchasers for Teleset installation or servicing before such forms are used and to submit to Du Mont for its approval a copy of each agreement, whether written or oral, with an authorized retail Teleset dealer before such agreement is entered into. No such form shall be used or agreement entered into that has not been approved in writing by Du Mont in advance."

6. The question has been raised by some dealers as to whether or not they may charge for labor involved in the replacement of parts during the warranty period. Since it specifically states in their franchise

that the dealer will provide free of charge such labor or other services as may be required, the answer is obvious.

7. Particular attention is invited to the fact that the use by a dealer of an outside service company does not relieve him of his responsibility under the warranty for the proper installation and maintenance of every set sold by him. The service company is definitely not a free agent and the responsibility for poor performance of the service company cannot be shifted to him by the dealer. Every complaint from a purchaser of a Du Mont set received by a dealer should be followed up by him. If reports of unsatisfactory service are received concerning the operation of a certain installation by an outside service company, the dealer should investigate each case and if he is convinced that the service company is not performing satisfactorily, the balance of contracts given to him should be transferred to another service company. Before such action is taken, the facts in the matter should be reported to the Teleset Service Control Department and recommendations requested concerning another suitable and more competent authorized service company in the area. Whenever an excessive number of complaints have been received against a specifi service company, Du Mont may exercise its privilege of cancellation of the servicing agreement.

8. In a few cases complaints have been received from set owners indicating that dealers have advised customers who have brought complaints to them that they have no responsibility in the matter and that the complaint should be referred directly to the service company or to Du Mont.

9. Since the Du Mont Sales Organization has now become of nationwide scope, it is not possible for Du Mont to send or provide representatives in every city and town to handle complaints received from dissatisfied owners regarding operation of Du Mont sets. The distributor in each territory must assume the responsibility for handling such complaints and should make every effort to insure that their organization is self-supporting so far as service is concerned. The importance of prompt handling of complaint matters by dealers and service companies should be stressed and every effort made to take care of problems promptly as they arise.

10. The great majority of service difficulties are due to poor installation or to inexperienced service personnel. By prompt and efficient corrective action, the customer may still be made satisfied with his Du Mont. By dilatory or inefficient action, a dissatisfied owner is bound to result and in the long run the reputation of the individual, distributor, dealer and Du Mont will suffer.

11. SALES AND SERVICE MUST GO HAND IN HAND. WITHOUT EFFICIENT SERVICE, A SALES ORGANIZATION CANNOT EXPECT TO MAINTAIN SUCCESSFUL OPERATION.

TELESET SERVICE POLICY LETTER #4

SUBJECT: INSTALLATION STANDARDS

For some time the Radio Manufacturers' Association has, through its Safety Committee, and the Service Committee of its Commercial Branch, been attempting to establish standards for the guidance of dealers and service organizations concerned with the installation of television receivers.

As a result of these efforts, the National Electrical Code has been revised (1949) and certain installation requirements have been established. A copy of the pertinent articles is appended hereto. It is desired that they be adhered to by all persons concerned in installing Du Mont television receivers.

Particular attention should be devoted to the mounting of antenna support poles or masts. Every effort should be made to avoid drilling holes in roofs, damaging shingles or perforating tarred coating of flat roofs. The most desirable method of mounting ordinary short antenna poles is to clamp same to a chimney, utilizing metal straps and "U" shaped wooden blocks. Straps should be sufficiently tight to prevent rotation of the mast.

When mounting brackets are secured to the outer wall of the house, care should be taken to insure that the structure is not damaged so that leakage may result. Where insulating tubes are used at the point of entrance to the building, caulking compound should be spread around the tube at the point of entrance to prevent leakage. Where insulating tubes are placed in window casings, particular precaution must be taken to insure that the window may be opened and closed freely without interference.

Under no circumstances are transmission lines to be secured to the standoff insulators already installed on a house for telephone or power leads.

Du Mont recommends the use, in strong signal areas, of a folded dipole antenna of the Cosgrove or Brach type. These antennas are designed for broad-band reception and are supplied with necessary matching transformers for use with a 72 ohm transmission line. As all Du Mont receivers are designed for a 72 ohm unbalanced input, the use of these antennas and 72 ohm coaxial cable (RG59U or RG11U) lead-in will result in perfect matching. The use of other types of antenna and transmission lines may result in mismatching and poor operation, particularly in noisy areas. In some cases where a particularly long lead is required, and signal strength is low, the loss in the standard coaxial cable may be so great as to affect reception. Where low noise level permits, RG11U should be used for these installations.

In some congested residential districts, hotel and apartment operators do not permit the use of outside antennas. The use of window antennas and various types of indoor antennas is authorized in such cases, but only if clear usable pictures may be obtained in each instance. In indoor installations, antennas should be so located that they will not be affected by movement of persons in the room.

If placed near the ceiling, or in another room, the disturbance of standing wave patterns may be avoided. The use of coaxial cable with these installations will also tend to reduce noise interference.

In some areas it may be found that the recommended standard antennas will not have sufficiently high gain to receive usable signals. In these cases, such antenna installations as may be found best suitable to the location are authorized. Distributors, dealers and service organizations should determine which type of antenna is most satisfactory in their various installation areas. In any case, proper matching transformers should be used to insure best reception.

Many locations in large cities, although in proximity to the transmitting stations, are very poor receiving sites because of noise interference, numerous reflections from surrounding high buildings, lack of suitable power supply and other reasons. This situation should be realized by the dealer and the customer residing in such areas should be definitely informed before making the sale that it is impossible to guarantee reception on allchannels in such areas.

Dealers should not place the onus of poor reception on the service company responsible for the installation, as it is entirely possible in many cases, that a sale should never have been consummated. If at the time of installation, it is found by the installation men that good reception is impossible in the particular receiving site, the customer and the dealer should be so informed and instructions requested from the dealer. If the dealer insists that the installation be completed, the service company should, for its own protection, obtain written instructions from the dealer to complete the installation. When this has been done, future dissatisfaction on the part of the customer will then be considered entirely the responsibility of the dealer who made the sale. Service companies completing installations which result in unsatisfactory reception, without having given notice to the dealer, shall be held responsible therefor.

Dealers are urged to caution all of their sales personnel regarding sales of Telesets to persons residing in areas where reception is known to be bad or doubtful. The effect of dissatisfaction on the part of the customer cannot be overestimated. Many of the service complaints which are made by customers are brought about by receiving conditions rather than actual operation of the set. The criticism attendant on one poorly operating set can severely damage the reputation of Du Mont products as well as the dealer and installation company concerned.

Du Mont is making every effort to improve the quality of its receivers but no receiver, regardless of its quality can receive usable pictures where signal strength is low or non-existent.

INSTALLATION OF TELEVISION RECEIVER ANTENNA

Portions of Article 810 of the National Electrical Code which apply to Television Receiver installations are quoted herewith for your information.

ANTENNA SYSTEMS - GENERAL

"8111. MATERIAL. Antenna, counter-poise and lead-in conductors shall be of hard-drawn copper, bronze, aluminum alloy, copper-clad steel or other high-strength, corrosion-resistant material. soft-drawn or medium-drawn copper may be used for lead-in conductors where the maximum span between points of support is less than 35 feet.

8112. SUPPORTS. Outdoor antenna and counter-poise and lead-in conductors shall be securely supported. They shall not be attached to poles or similar structures carrying electric light or power wires or trolley wires of more than 250 volts. Insulators supporting the antenna or counter-poise conductors shall have sufficient mechanical strength to safely support the conductors. Lead-in conductors shall be securely attached to the antenna.

8113. AVOIDANCE OF CONTACTS WITH CONDUCTORS OF OTHER SYSTEMS. Outdoor antenna, counter-poise and lead-in conductors from an antenna to a building shall not cross over electric light or power circuits and shall be kept well away from all such circuits so as to avoid the possibility of accidental contact. Where proximity to electric light and power service conductors of less than 250 volts cannot be avoided, the installation shall be such as to provide a clearance of at least two feet. It is recommended that antenna and counter-poise conductors be so installed as not to cross under electric light or power conductors.

8114. SPLICES. Splices and joints in antenna and counter-poise span shall be made with approved splicing devices or by such other means as will not appreciably weaken the conductors. (Soldering may ordinarily be expected to weaken the conductor. Therefore, when soldering is employed it should be independent of the mechanical support.)

8115. STRUCTURES. Metal structures supporting antennas shall be permanently and effectively grounded.

ANTENNA SYSTEMS - RECEIVING STATION

8121. SIZE OF WIRE STRUNG ANTENNA AND COUNTER-POISE.

(a) Outdoor antenna and counter-poise conductors for receiving stations shall be of a size not less than given in the following table:

Material	Minimum Size of Conductors When Maximum Open Span Length Is: Less than 35 feet	35 feet to 150 feet	Over 150 feet
Aluminum alloy, hard-drawn copper...	19	14	12
Copper-clad steel, bronze or other high strength material.....	20	17	14

(a) (cont'd) For very long span lengths larger conductors will be required, depending on the length of the span and the ice and wind loading.

(b) SELF-SUPPORTING ANTENNAS. Outdoor antennas, such as vertical rods or dipole structures, shall be of non-corrodible materials and of strength suitable to withstand ice and loading conditions.

8122. SIZE OF LEAD-IN. Lead-in conductors from outside antenna and counter-poise for receiving stations, shall, for various maximum open span lengths, be of such size as to have a tensile strength at least as great as that of the conductors for antenna as specified in section 8121. When the lead-in consists of two or more conductors which are twisted together or are enclosed in the same covering or are cocentric, the conductor size shall, for various maximum open span lengths, be such that the tensile strength of the combination will be at least as great as that of the conductors for antenna as specified in section 8121.

8123. CLEARANCES.

(a) On Buildings - Outside. Lead-in conductors attached to buildings shall be so installed that they cannot swing closer than two feet to the conductors of circuits of 250 volts or less or ten feet to the conductors of more than 250 volts, except in the case of circuits not exceeding 150 volts, if all conductors involved are supported so as to insure permanent separation, the clearance may be reduced but shall not be less than four inches. The clearance between lead-in conductors and any conductor forming a part of a lightning rod system shall be not less than six feet unless the bonding referred to in section 2586 is accomplished.

(b) Antenna and Lead-Ins - Indoors. Indoor antennas and indoor lead-ins shall not be run nearer than two inches to conductors of other wiring systems in the premises unless

1. Such other conductors are in metal raceways or cable armor, or
2. Unless permanently separated from such other conductors by a continuous and firmly fixed non-conductor such as porcelain tubes or flexible tubing.

PROTECTORS

8141. LIGHTNING ARRESTERS - RECEIVING STATIONS. Each conductor of a lead-in from an outdoor antenna shall be provided with a lightning arrester approved for the purpose, except that if the lead-in conductors are enclosed in a continuous metallic shield the lightning arrester may be installed to protect the shield or may be omitted if the shield is permanently and effectively grounded. Lightning arresters shall be located outside the building, or inside the building between the point of entrance of the lead-in and the radio set or transformers, and as near as practicable to the entrance of the conductors to the building. The lightning arrester shall not be located near combustible material nor in a hazardous location.

GROUNDING CONDUCTORS - GENERAL

8151. MATERIAL. The grounding conductor shall, unless otherwise specified, be of copper, aluminum, copper-clad steel, bronze, or other corrosion-resistant material.

8155. RUN IN STRAIGHT LINE. The grounding conductor shall be run in as straight a line as possible from the antenna mast and/or lightning arrester to the grounding electrode.

GROUNDING CONDUCTORS - RECEIVING STATION

8161. INSIDE OR OUTSIDE BUILDING. The grounding conductor may be run either inside or outside the building.

8162. SIZE OF PROTECTIVE GROUND. The protective grounding conductor for receiving stations shall be not smaller than No. 14 copper or No. 12 aluminum or No. 17 copper-clad steel or bronze, provided that where wholly inside the building it shall not be smaller than No. 18.

8163. COMMON GROUND. A single grounding conductor may be used for both protective and operating purposes. If a single conductor is so used, the ground terminal of the equipment should be connected to the ground terminal of the protective device.

INTERIOR INSTALLATION - GENERAL

8181. RADIO NOISE SUPPRESSORS. Radio interference eliminators, interference capacitors or radio noise suppressors connected to power supply leads shall be of a type approved for the purpose. They shall not be exposed to mechanical injury."

It will be noted that a lightning arrester is not required under paragraph 8141 when the lead-in conductors from antenna to entrance of building are protected by a continuous shield which is permanently and effectively grounded. Such requirement would, therefore, be met by proper grounding of the outer shield of the regular coax cable now recommended for use with all Du Mont receiver installations. Installation men should be particularly cautioned to comply with paragraph 8123 and to refrain from the use of insulators or cable clips installed on or in buildings by telephone or lighting companies.

It is suggested that all service organizations obtain a copy of the 1947 National Electrical Code as revised by supplement #70 of November 1, 1949 and insure that all of their installation men are familiar not only with the requirements of Article 810, but with the general requirements for running cable, installing fittings and other requirements which should be complied with in connection with any installation work.

Compliance with the National Electrical Code will insure the service organization or dealers concerned against the possibility of complaint or civil action.

In addition to the National Electrical Code, there have been various local ordinances issued by city or state authorities, pertaining to television installations. The requirements set forth in the "Regulations for Television Antenna Systems for Receiving Sets" issued by the Boston Fire Department is an excellent example, and is recommended to all Du Mont installation and service personnel as an additional guide to proper installation work. These Regulations are quoted below:

BOSTON FIRE DEPARTMENT

ELECTRICAL INSPECTION DIVISION

REGULATIONS FOR TELEVISION ANTENNA SYSTEMS FOR RECEIVING SETS

"ANTENNA MAST

1. The antenna and mast shall be of substantial material and construction and be supported in a rigid manner. It may be of a design with a heavy special base of a dimension to make the mast self-supporting.

If installed on a flat roof, no guy wires shall attach from the mast to the roof or structure in the area used by firemen or other persons having access unless they are at least eight feet above the roof at all points.

In all cases where possible and practical, the antenna mast shall, unless of the self-supporting type, be supported from the vertical wall of the building, structure or chimney.

TRANSMISSION LINE

2. The transmission line shall not be attached to the same cross arm or supports for light, power, or communication conductors, and shall not come nearer than 6 feet to a lightning rod.

The wires from the antenna mast on the outside of the building wall and on the roof, shall be supported in a manner to hold the wires taut on both horizontal and vertical runs. *They shall be protected and insulated where entering building by use of an insulating tube and shall be connected to an approved lightning arrestor located inside or outside the building. Where exposed to mechanical injury, they shall be suitably protected. They shall have a permanent separation of two feet from open wires up to 250 volts potential, and greater separation for higher voltages.

The supports shall consist of substantial brackets and insulators and one such support shall be placed on the transmission line at least every ten feet or at each floor level on the face of the building or structure, and where run on roof surface shall be protected against mechanical injury.

The wires shall be suitably insulated and shall be not smaller than #18 A.W.G., or equivalent. (Du Mont does not consider this practical and it is not believed this section will

TELESET SERVICE POLICY LETTER #5

SUBJECT: INSTRUCTION OF TELEVISION SERVICE MEN

In order that the quality of installation and service work rendered by our distributors, authorized dealers and service organizations may be further improved, a service school is maintained at the Teleset Service Control Department offices in East Paterson, New Jersey.

It is the policy of the company to require that, in order to be authorized to install and service Du Mont Telesets, distributors, dealers, and service organizations must agree to have one or more of the men attached to their organization attend this school. Men detailed for the course should be group leaders in order that the knowledge they gain may be available to the other men in their group. This policy also applies to those of our present authorized dealers who may desire to establish their own service organizations in the future.

Service organizations and dealers who are already performing installation and service work in a satisfactory manner are not required to send their men to this school. However, the facilities of the school are made available to them at any time and they are urged to take advantage of this opportunity for additional training of their employees.

The purpose of the school is to give a short intensive course in the servicing of Du Mont Telesets. The course is not an elementary study of television and is available only to servicemen who have had some basic training in television and are already actively engaged in the trade. The course consumes two weeks, during which time each of the standard Du Mont chassis in use are studied. The study consists of short lectures and practical discussion of troubles which may be encountered in the field, methods of diagnosis and determination of troubles, and their correction both in the field and in the shop.

Particular stress is laid on the necessity for correct installation methods under various conditions. A majority of service complaints can be traced to poor original installation work, and to failure of the installation men to instruct set owners in the proper use of the set. "Nuisance" calls are unnecessary and expensive and it is felt that they can be greatly reduced by proper installation and instruction.

Classes are small, in order that individual discussion may be encouraged and maximum time devoted to each student.

Certificates are issued to each serviceman on successful completion of the course, indicating that he is qualified to service Du Mont Telesets.

No charge is made for the instruction, and it is expected that the expenses of transportation, housing and subsistence will be borne by the dealers or service organizations concerned. Arrangements for hotel accommodations will be made for out-of-town students by Du Mont on request.

It is considered that this course is of particular value to distributors, dealers and servicemen in new sales territories and it is hoped that by preliminary indoctrination many of the troubles normally encountered in handling unfamiliar sets can be prevented or minimized.

Requests for further information concerning the instruction course and for enrollment of servicemen therein, should be addressed to The Manager, Teleset Service Control Department, Allen B. Du Mont Laboratories, Inc., 35 Market Street, East Paterson, New Jersey.

TELESET SERVICE POLICY LETTER #6-3

SUBJECT: INSTALLATION AND SERVICE CHARGES

1. In order that uniformity of charges may exist in connection with installation and service contracts in the various areas, the following maximum rates are recommended:

	Installation & 3 Month Service	Installation & 1 Year Service	1 Year Renewal * Service
Sumter, Ventura, Carlton, Park Lane, Andover, Strathmore Chatham, Meadowbrook, Rumson, Sheffield, Hastings, Fairfield, Westwood, Canterbury, Putnam, Guilford.	$45.00	$65.00	$35.00
Ardmore, Westerly, Mt. Vernon, Brookville, Revere, Burlingame.	50.00	70.00	40.00
Tarrytown, Stratford, Westbury, Whitehall, Sussex, Mansfield, Hanover, Winslow.	60.00	80.00	45.00
Savoy, Colony, Bradford, Club 20, Wellington, Sherbrooke.	65.00	85.00	50.00
Manchu, Westminster, Hampshire.	95.00	125.00	85.00
Sherwood, Plymouth, Devonshire, Revere.	75.00	105.00	75.00
Custom.	25.00**	100.00**	100.00**

Notes: *Does not include CRT. If CRT covered in contract, following additional rates recommended:

12½" - $ 5.00
15" - 7.00
19" - 12.00

**Service only. Installation to be made on time and material basis.

2. The above listed prices cover standard installations only and are subject to a $25.00 increase for commercial installations.

3. Where indoor portable antennas are used which require no installation work other than that of connecting same to set, a sum of $20.00 should be deducted from any of the above listed charges. Similarly, where multiple antenna systems are already installed and it is not necessary to provide any antenna for an individual set, a sum of $25.00 should be deducted from the suggested charges listed above.

4. In areas where the labor scale is low, dealers may reduce rates below the suggested limits, provided adequate service is rendered during the course of the service contract.

5. A standard installation should include one broad-band antenna, with or without reflector, mounted on a single short length of pole or pipe support (not over 10'), with the necessary coaxial cable (not over 150'), to connect the antenna to the receiver. Standard installations should be made in accordance with the requirements of Teleset Service Policy Letter #4.

6. Where the receiving location is such that a single broad-band antenna cannot be so oriented as to receive all stations in the area, an additional high frequency unit should be installed. The cost of this extra antenna may be added to the regular installation charge but should not normally exceed $15.00.

7. In "fringe" area locations, special installations requiring masts, towers, antenna arrays, pre-amplifiers, switching devices, and other non-standard equipment are usually necessary. In some city areas, where reception conditions are unusually poor, attenuators, reflectors, additional antenna and switching devices are sometimes required to obtain usable pictures. Additional costs in either of the above cases should be charged for on a time and material basis.

8. Under no circumstances, should customers be "guaranteed" reception on all channels, but every effort should be made to explain the limitations of television reception under abnormal and adverse conditions, if such reception is not possible.

9. Before proceeding with any installation other than standard, an estimate of additional costs, and the reason therefore, should be submitted to the customer. If he is unwilling to pay the additional charges and satisfactory reception is otherwise not obtainable, the dealer should be informed and no installation made.

TELESET SERVICE POLICY LETTER #7

SUBJECT: HANDLING OF SERVICE FUNDS

1. The recommended installation and service charges contained in Teleset Service Policy Letter 6 are considered reasonable for adequate service by competent service companies. Any reduction in these amounts may result in a reduction of the standards of installation and service and will thus be detrimental to the best interests of the set owner, the dealer, Du Mont, and the industry in general. Dealers should not require or expect service organizations to accept less than these amounts. Free installation and service by dealers to their customers is considered an attempt to circumvent restrictions against "price-cutting", and will undoubtedly result in poor service to the customer.

2. The following procedure is recommended to all dealers and service organizations as a method of safe-guarding funds which should be considered in the nature of a trust fund held for the benefit of customers.

3. At the time of the sale to the customer, the dealer shall collect the full amount of the installation and service charge authorized by Du Mont. On completion of the installation by the service organization, the cost of such installation plus one quarter ($\frac{1}{4}$) of the balance shall be paid immediately to the service company. In order to insure uniformity among the various dealers and service companies, the cost of installation shall be considered as one half ($\frac{1}{2}$) of the total amount collected for service and installation. The remainder of the service fund shall be held as a reserve by the dealer and paid to the service company in three quarterly payments.

4. Since the dealer is responsible, in accordance with his franchise to see that proper service is rendered to his customer, and since the service organizations are acting as agents of the dealers, the withholding of these funds as described, constitutes a reserve for the protection of the dealer in the event that the service organization should render unsatisfactory service or discontinue operation.

5. Where this method of payment is used by dealers, it is considered that adequate protection is afforded them, and the necessity for performance bonds as originally recommended by this company is eliminated.

6. Since the service organizations are entitled to some protection as well as the dealers, such reserve funds as are held by the dealers should be deposited in escrow in a separate account to be used only for the purpose of reimbursing the service organizations concerned.

7. In addition to the establishment of reserve funds by non-servicing dealers to cover operations of their service companies, it is considered necessary and desirable that servicing dealers establish a similar fund as a reserve to cover possible requirements

under their service contracts. The funds collected from a customer for service should not be considered available for general expenditure until the expiration of the contract period. The funds are paid by the customer to cover installation and service for a specific period and they should be kept entirely separate from other receipts. They should constitute a trust fund which will insure continuance of service even in the event of bankruptcy.

8. In distributor controlled territory, the distributor should handle the withholding of service funds as under his franchise he is responsible for the proper installation and service of all sets sold within his territory. In lieu of this manner of handling these funds, arrangements may be made for bonding or insuring of the dealer so as to insure continued maintenance of these service contracts in cases of an eventuality of one kind or another.

TELESET SERVICE POLICY LETTER #8

SUBJECT: ANTENNA MODIFICATION TO PERMIT RECEPTION OF ADDITIONAL CHANNELS

With the advent of additional transmitter stations throughout the country, the problem of modifying installations to permit set owners to receive newly opened stations is constantly arising.

Du Mont receivers are so designed that they will receive all channel and the various types of antennas which have been recommended for use with Du Mont receivers are usually capable of receiving all channels. However, because of the geographical location of many of the new stations, it is obviously impossible for set owners to receive all stations within range of their receivers without some modifications being made to their existing antenna installations.

While the average set owner feels that Du Mont, the dealer, or the service organization concerned should modify his installation free of charge, it is not considered that the necessary expenditure of time and material without remuneration is justified.

The following policy regarding adjustments for new stations is therefore established.

On existing installations, which are otherwise satisfactory, any installation work such as the addition of special antenna, lead-in or switching devices shall be made on a time and material basis and charged to the set owner.

Where reception of new stations is possible by a simple orientation of the antenna, the customer should be charged only for the time consumed in making such adjustments. Where dealers or service organizations consider that such adjustment can be made without undue expense, as an investment in customer relationship, such action will be optional with the parties concerned.

Before proceeding to modify installations to accommodate newly opened stations, the possibility of further additional stations opening within a short period of time should be given consideration and additional installations should be so oriented as to include future stations if possible. As some cities may eventually have as many as seven television transmitting stations, it is clearly impossible for one antenna to receive all stations. The reasons for installation of additional antenna and switching devices should be carefully explained to the customer in order that they may understand the necessity therefore. Very few television set owners are familiar with the fundamental technical limitations as they now exist, and it is believed that any time given to explaining the theory and practical aspects of television transmission will be well spent from the standpoint of prevention of misunderstandings and complaints.

TELESET SERVICE POLICY LETTER #9

SUBJECT: MODIFICATION OF DU MONT TELESETS

1. It has come to the attention of Du Mont that some distributors and dealers have made unauthorized modifications of Du Mont standard Telesets. These modifications include various circuit changes, installation of different types of record changers and the removal and transfer of chassis to non-standard cabinets or built-in custom installations.

2. The warranty issued by Du Mont covers the Teleset as built and shipped from our factory, and we cannot accept responsibility under the warranty for failure of parts or operation of sets which have been modified or altered without our permission.

3. The stamp of approval issued to our several types and models by the Underwriters' Laboratories likewise applies only to the sets as designed and built by Du Mont and are automatically voided by unauthorized modification.

4. In view of the above, it is desired that all distributors, dealers and service organizations desist from such practices.

TELESET SERVICE POLICY LETTER #10

SUBJECT: RETURNED SETS FOR WHICH NEW WARRANTIES WILL BE ISSUED

Effective immediately, we are changing our warranty policy covering return of new sets to the dealers by customers. In the past, sets had to be returned within a maximum period of three weeks time from the date of installation in order to be covered by new warranties.

In order to give our dealers an opportunity to "sell up", the maximum allowable period for returning a set is being extended to six weeks. This means that in all cases where sets are returned within this maximum period a new Warranty will be issued by this company. It is absolutely necessary, however, that we be advised when a set has been returned within a maximum period of two weeks after the six-week period has elapsed. This notice must be in writing and no requests for a new warranty will be honored unless they are received within the specified period.

Although this extension in time will allow you to secure a second factory warranty for a set, it will not be possible to register a set a third time for a factory warranty.

Many dealers in the past have held back registration of the new type request for warranty until they were certain that the customer would keep the set. Because of these delays, requests for credit on defective parts could not be approved, since there was no registration file with us. Now that the three-week period has been doubled to six weeks, may we ask your prompt cooperation in filing requests for warranty registration immediately upon installation of sets.

We are quite certain that this change in policy will meet with your wholehearted approval and that your cooperation in following the above requested procedure will allow us to give you even better service than in the past.

April 19, 1950