RA-102 SECTION

This section is devoted to information pertaining to the RA-102 Telesets. Although these Telesets are no longer manufactured, we are definitely interested in their proper operation.

If any serviceman has had any particularly interesting troubles to diagnose on this Teleset, we would appreciate getting the details.

Index RA-102 Section

RA-102 SECTION

INSTALLING 1N34 CRYSTAL RECTIFIER

Extreme care must be used when soldering this crystal. Care must be taken to ensure that no heat reaches the crystal element itself.

When soldering, the pigtail lead should be held by a pair of long nose pliers between the crystal element and the soldering point. This procedure will ensure that any heat generated by the soldering operation will be dissipated in the pliers and will not reach the crystal element.

CLIFTON INTER-CHASSIS POWER CABLE SHORT TO PLATE OF 807 TUBES

This cable has a tendency to work its way to close proximity to the plates of the 807 sweep amplifier tube. When this happens an arc occurs between the 807 plate caps and the wires enclosed in this power cable.

When inspecting this receiver always make sure that this cable runs directly to the chassis plug and is free and clear of all tubes on the receiver chassis.

FRONT PANEL FOCUS CONTROL

The early model RA-102 Telesets did not have the focus control mounted on the front panel. The later model with the front panel control is known as RA-102-B2.

The chassis in these Telesets are not interchangeable with the models that do not have the front panel control. All chassis for the RA-102 Teleset with serial numbers listed below are interchangeable:

1. Receiver chassis from serial #501-252 onward.
2. Power Supply chassis from serial #601-251 onward.

To install the focus control on the front panel of those early model Clifton receivers which did not have this feature, it is only necessary to drill a hole on the front panel for the focus control potentiometer and extend the leads to reach this control in its new position.

We do not recommend that circuit changes be made when so altering the early model Clifton Teleset.

ABNORMAL NOISE FLASHES ON SCREEN

Under humid atmospheric conditions a large amount of noise flashes on the CRT screen has been noticed. This has been traced to corona discharge in the high voltage RF power supply.

Examine the high voltage supply in a darkened room. Corona discharge will be seen as a blue glow surrounding exposed metal high tension points.

Remedies suggested:

1 - Lead dressing to lengthen discharge path.
2 - Insulating sleeving on leads
3 - Painting exposed high voltage points with insulating compound.

This condition has been encountered mainly in salt water areas where atmospheric humidity is high.

LOW PICTURE IF SENSITIVITY

This condition will cause the picture level to drop when the sound carrier is properly tuned in. The condition will be most apparent on stations with low signal strength. Check these causes:

1 - Poor vacuum tubes in IF chain.
2 - Defective 1N34 video rectifier.
3 - Poor vacuum tube in inputuner.

TESTING 1N34 CRYSTAL RECTIFIER

The front to back resistance ratio of the 1N34 crystal should be at least 100 to 1. Normally, the ratio falls below 100 to 1, the crystal should be replaced. These resistance ratios may be measured with a common ohmmeter.

AM TUNER BIRDIES OR HETERODYNE

Evenly spaced carriers across the broadcast band every 17 Kc. are caused by continuously running HVRF oscillator or horizontal sweep oscillator. Causes may be:

1 - Bias on H.V. oscillator has dropped so that oscillator is free running without triggering from sweep circuits. Check cathode resistor, grid resistor.

2 - Beam cut off relay not opening when television is switched off. Clean contacts, or adjust armature return spring tension.

TYPICAL TROUBLES

The following list represents troubles which may show up in the RA-102 Telesets:

Indication	Cause
No high voltage.	Defective 8016, or 807 in Power Supply. Defective high voltage transformer.
Picture has horizontal wobble.	Defective 6AC7 (Video amplifier) 807's (horizontal output stage) or 6SN7 (1st sync amplifier).

Notches in picture or raster. (moving up and down)	Bad 6AS7.
Poor definition	Bad crystal.
Picture size varies excessively during evening's operation.	Improperly adjusted high voltage. (See service manual).

RA-103C SECTION

This section is devoted to problems concerned with the installation and service of the RA-103 Telesets prior to the RA-103D model. A special section will be devoted to the RA-103D models.

Schematic diagrams for the RA-103C models are available at a cost of $0.15 each.

Index RA-103 Section

Magnet Fastened to the Inside Cover Over the H.V. Power Supply in the RA-103 Models

Fastened to the inside of the cover over the Flyback H.V. Power Supply is a small permanent magnet. The purpose of this magnet is to suppress an electronic or Barkhausen type of oscillation in the Horizontal Deflection Amplifier V221. This condition is prevalent on all television receivers using the same type of deflection amplifier circuit.

Upon removal of the cover over the flyback power supply, you will observe that a dark vertical streak approximately 1 inch from the left side of the picture will become visible on some of the high frequency channels.

All Du Mont Model RA-103 television receivers contain this magnet with the exception of a few very early production models.

Adjacent Channel Video Trap

In certain areas where television signals are received on two adjacent channels (such as halfway between two cities having television stations), adjacent channel video interference has been observed on RA-103 Telesets. When tuned to the lower frequency channel of two such adjacent channels, interference is experienced from the video carrier in the higher frequency channel. This interference is usually seen as horizontal sync running back and forth through the desired signal.

This may be corrected in the field, by the addition of a series-parallel resonant trap in the third video IF amplifier as illustrated in the sketch below:

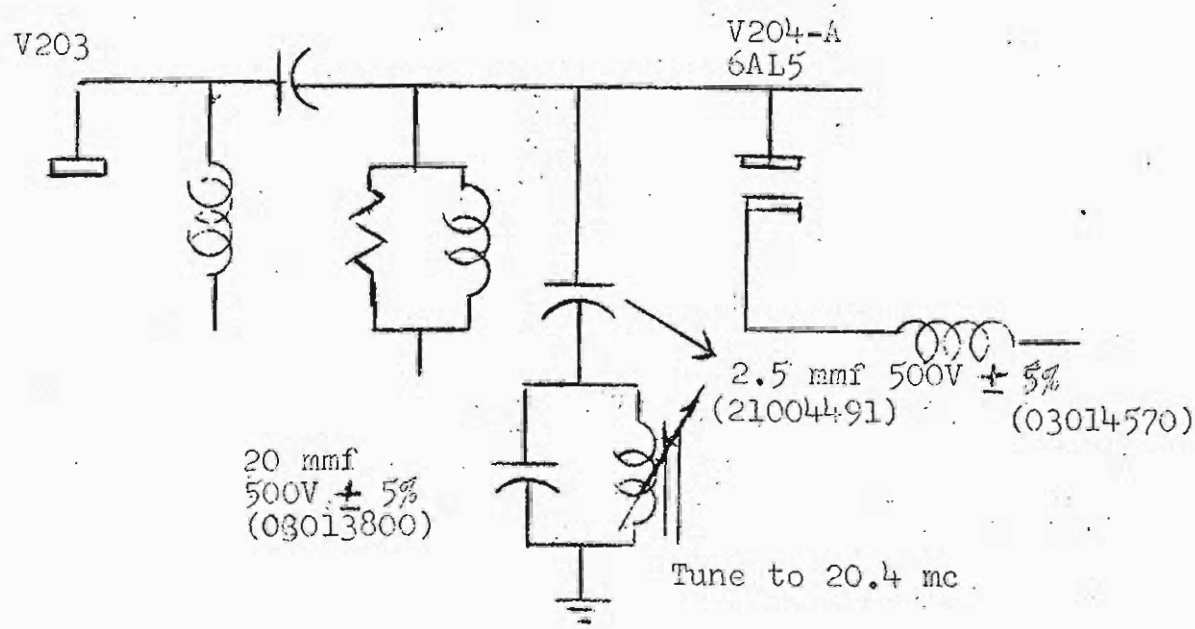

Trap Assembly:

The parts required are one 2.5 uuf, part #03014570, one 20 uuf, part #03013800 and one inductor assembly, part #21004491. Connect the 2.5 uuf capacitor to the lug to which the end of the winding closest the lug is soldered, leaving ½" of wire between the body of the capacitor and the lug.

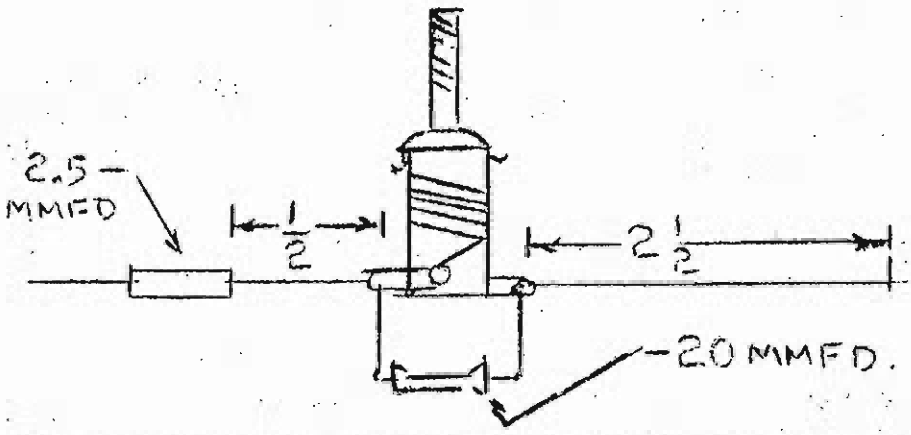

Connect a 2½" length of #18 bare-tinned copper wire to the other lug of the inductor. Connect the 20 uuf capacitor across both of the lugs of the inductor.

Installation:

A 13/32 diameter hole should be carefully punched (using a Parker-Kalon Metal Punch XX) in the video IF amplifier shield plate as shown in the sketch below:

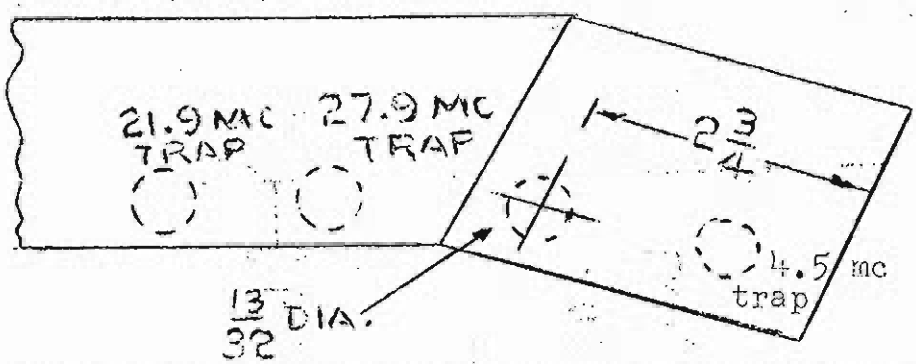

Use extreme caution when punching this hole so that alignment will not be disturbed.

Insert the trap assembly in the hole so that the lugs are parallel to the main chassis, and with the bare wire closest to the main chassis. Solder the bare-tinned wire to pin 3 of the video amplifier (V205). Solder the free end of the 2.5 uuf capacitor to the junction of L212, C288, R218, and Pin 2 of V204-A.

Tuning Procedure:

The trap may be tuned using a signal generator or by utilizing the interfering station.

A. Setting the trap by signal generator:

Turn the contrast control to the extreme right. Connect a signal generator, 30% modulated at a carrier frequency 1.5 mc below the sound IF frequency, to pin 1 (grid) of V201 and chassis. Connect an oscillograph between pin 4 (grid) V205 and ground. Adjust coil for minimum deflection of the oscillograph.

B. Setting trap using two adjacent stations:

Tune receiver to sound of lower channel. Adjust contrast and brightness controls for best picture. Observe picture and watch for the interference. Tune trap from maximum inductance toward minimum inductance until the interference disappears. Rock trap tuning back and forth to be certain that trap is correctly set.

ADJUSTMENT OF ION TRAP MAGNET ON 12QP4 CATHODE-RAY TUBES

(Refer to page G-4 in the General Section. The procedure applies to all tubes using bent guns.)

REPLACEMENT OF 12JP4 CATHODE-RAY TUBES

All 12JP4's replaced under the warranty are being replaced by the 12RP4. The 12RP4 is physically the same as the 12JP4, with the exception of the gun, which is bent. Thus, an ion trap magnet must be used with this tube. The part number of the magnet used with the 12RP4 is 21004471.

RA-103 VERTICAL SYNC CIRCUIT MODIFICATION

Tests in the laboratory and field have indicated that the following circuit changes give a very substantial improvement in sync noise immunity. These changes are recommended for use in areas where noise causes the Teleset to lose vertical sync. These changes should be especially valuable in weak signal and high noise areas.

Refer to Fig. 1A showing the old or unmodified circuit and Fig. 1B showing the new or modified circuit when making the following changes:

1. Replace V205 the 6AC7 Video amplifier tube with a type 6AG7 tube.
2. Disconnect the low side of R219 (the 4.7K resistor in the grid circuit of V205) from the junction of R216 (120Ω) and R220 (15Ω).
3. Connect a 12K ½ watt resistor from the low side of R219 (just disconnected) to ground. Place a 25 mfd 25V capacitor in parallel with this resistor. Be sure to connect the positive side of the capacitor to ground.
4. Add a 27K ½ watt resistor between the junction of R219 (4.7K) and the 25mfd capacitor and 12K resistor added in step 3 and the junction of the -12.5 volt line and R216.

5. Remove R223 (3.6K) (the plate load resistor of the video amplifier) and replace with the two 6.8K 2 watt resistors connected in parallel. Connect one end of this combination to the low end of L215 and run a lead from the other end of this combination to the junction of R288 (the focus control) and R286B (the candohm strip resistor).
6. Remove R222 (3.3K, connected to C216B).
7. Add an 18K ½watt resistor between the junction of L215, C217 and L216, and capacitor C283.
8. Remove capacitor C282 (connected from pin #7 V204B to ground). Remove capacitor C219 (located between pin #7 of V204B and pin #1 of V212A) and replace with a short lead, using pin #7 terminal lug to which C219 was connected.
9. Remove resistor R224 (located between pin #1 of V212A and ground).

Refer to Fig. 2A showing the old or unmodified circuit and Fig. 2B showing the new or modified circuit when making the following changes:

10. Add a 27K ½ watt resistor between the junction of C244 and R259 and pin #4 of V213.
11. Remove capacitor C252 (between pin #8 V213 and pin #4 V216A) and replace with 0.1 mf capacitor.
12. Disconnect the ground side of R269 (grid circuit of V216A). This will be connected in step #17.
13. Connect an 82 mmf capacitor between pins #4 and #5 of V216A.
14. Disconnect R271 (10K) from pin #5 of V216A. (This resistor will be replaced in step #18).
15. Connect a 5.6K ½ watt resistor to pin #5 V216A.
16. Connect the other end of the 5.6K resistor just added to a 27K 2 watt resistor. Run a lead from the junction of these two resistors to C216B.
17. The other end of the 27K 2 watt resistor is to be connected to the junction of R262 and R261 and to the low side of R269 the 1.2M resistor in the grid circuit of V216A.
18. Replace R271 with a 47K ½ watt resistor.
19. Connect a .1 mfd capacitor between pin #5 of V216A and the 47K just added.
20. Disconnect the blue lead of the primary of T201 from the +175 volt line and run directly to ground.
21. Remove R270 (the 12K resistor connected across the Brown Black winding of T201)
22. Remove R274, the 750K resistor located between pin #1 of V216B and the vertical hold control and replace with a 470K ½ watt resistor.

This completes the changes.

completed improvements in picture quality can sometimes be made. Watch effects of these adjustments on vertical and horizontal definition, ringing, trailing blacks, trailing whites, etc.

For Sets with the Local-Distance Switch

9. After set has been aligned place local-distance switch in distance position and tune set to a 50 microvolt test pattern. Adjust L206 for maximum signal. Tune to a strong test pattern (500 microvolt) and adjust C310 for the best picture.

SOUND IF ALIGNMENT PROCEDURE

1. Place a crystal probe in scope lead and connect to plate of second sound IF (V208) at can end. Feed a 22 mc wobbulated RF signal with about 1 mc sweep into grid of first sound IF (V207). Adjust top and bottom of L202 for maximum amplitude and a symmetrical curve as shown in Fig. 5.

2. Feed wobbulated signal into grid of first video IF (V201). Adjust secondary (bottom) of Z201 for maximum output. Adjust primary (top) of Z201 for 21.9 mc marker as shown in Fig. 5.

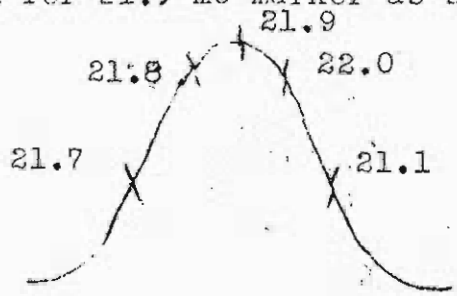

3. Place scope lead on sound take off point. Leave wobbulator where it is. Adjust top and bottom of Z203 for response shown in Fig. 6. Bottom of can will affect gain; top will affect symmetry of curve.

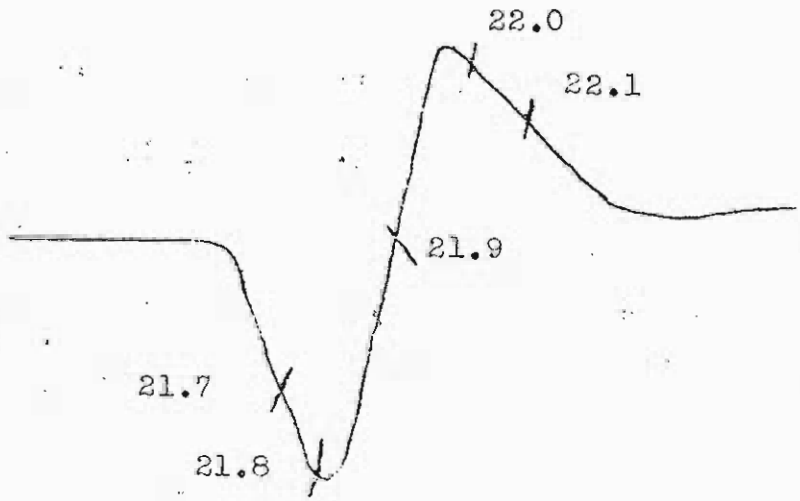

RA-103D, RA-104A, RA-110A SECTION

ERRATA SHEET

Several errors in the schematic diagram for the subject Telesets have been brought to our attention. Please correct these errors on your copy as follows:

Main Chassis Schematic

1. Connect pin #4 of V211 (the second sound amplifier) to the positive side of capacitor C208B. (Without this connection, the plate of the first sound amplifier and the screen grid of the second sound amplifier would be without B+ power.)

1. Parts List Sheet

The parts listed in the lower right hand corner under the heading "For the RA-110A Teleset make the following changes", should be located at the end of the "Receiver Parts List RA-103D, and RA-104A" and ahead of "Miscellaneous Parts List, Rumson and Sheffield Teleset RA-103D". These changes apply to the "Receiver Parts List etc."

2. Receiver Parts List RA-103D and RA-104A.

Symbol	Incorrect Part No.	Correct Part No.
C283	03014269	03014260
R281	010214620	01012400

3. Westwood Teleset RA-110A (Miscellaneous Parts List)

Component	Incorrect Part No.	Correct Part No.
Deflection yoke	21004241	21004971

4. Under the heading "For the RA-110A Teleset make the following changes", C287 is shown as an item to be deleted. The part number should be 03014740 instead of 02014740.

RA-103D, RA-104A, RA-110A SECTION

PRODUCTION CHANGES

Several circuit changes have been made since the schematic diagram for Teleset models RA-103D, RA-104A, RA-110A was issued. (Incidentally, this schematic also applies to the Fairfield Telesets under the heading RA-110A).

These changes are as follows:

Change #1

C308 in the plate circuit of V202, the 2nd video IF stage was deleted.

Purpose of Change:

To reduce regeneration caused by the incorporation of the "bottom coupled Inputuner."

If the serviceman changes the Inputuner on the early RA-103D or RA-104A Telesets to a "bottom coupled Inputuner" this change should also be made.

Change #2

C299 (in the plate circuit of V212A) was deleted as a separate capacitor and its symbol changed to C216C. Capacitor C216 was changed from a 3 section capacitor to a 4 section capacitor to accomplish this change.

C216 as a four section capacitor is described as follows:

C216	03014120	Cap E 10/10/10/10 mf + 75% -10% 300V

Change #3

R331 in the negative voltage supply was changed from 27K ½W to 22K ½W.

Purpose of Change:

The purpose of this change was to increase the negative bias supplied to the video amplifier stage V205.

The new part is described as follows:

R331	02031930	Res F C 22K 10% ½W

Change #4

The specification of capacitor C310 used in the Local-Distance switch circuit was changed to .8 to 7 mmfd.

The part number is not affected as this merely corrects a specification error.

Change #5

The values of R217 and R282, (the parallel circuit in the B+ lead to V216B and V217) have been changed from 10K each to 6.8K each.

Purpose of change

To increase the supply voltage to the vertical saw generator and vertical deflection amplifier in order to provide adequate vertical size for all uses of this chassis.

The new parts are described as follows:

R217	02037870/RC40BF682K	Res F C 6.8K ± 10% 2W
R282	02037870/RC40BF682K	Res F C 6.8K ± 10% 2W

Change #6

Changes A, B, and D, apply to RA-110A main chassis only. Change C applies to RA-104A and RA-110A main chassis.

A. R304 was originally a 50K resistor in the chassis used in the RA-110A. This resistor is deleted in the models currently being produced.

B. J206-1 is being deleted from the chassis used in the RA-110A. Because of this deletion, the 4 prong cable assembly P206 is changed from part #50016842 to part #50016843. The only difference between these two cable assemblies is that the white wire has been removed from pin #1.

C. The linearity coil L219 is changed from part #21004771 to #21004752.

D. The part number of T204 is changed from #20004521 to #20004581. The high voltage output obtained with this new transformer is approximately 9000 volts, which is 1000 volts lower than that obtained from #20004521.

Purpose of changes

A, and C, -- to improve horizontal linearity.
B -- the white wire is no longer necessary when R304 is deleted.
D -- to reduce the high voltage and obtain greater picture size.

The letter "D" stamped on the rear of the chassis, identifies it as containing changes #5 and #6 as noted above.

Change #7

R218 (located in the plate circuit of the video detector) has been changed from a 39K ½W resistor to an 18K ½ watt resistor. The description of the new part follows:

Part No.	Description
02030780	Res F C 18K ± 5% ½W

Purpose of Change

To reduce the dip that occurred in the center of the response curve of the third video IF stage. This dip was caused by the addition of the 20.4 mc trap circuit.

Change #8

The color designation of certain video IF coils have been changed as follows:

Symbol	Old Color	New Color	New Part No.
L206	Blue	Green	21004135
L208	Blue	Green	21004135
L212	Violet	Blue	21004136

Purpose of Change

To provide coils that will operate more nearly on design center.

The first chassis affected by this change are as follows:

Chassis	Serial No.
103D	0321680
104A	044201
110A	017128

Change #9

The voltage rating of capacitor C252 (coupling the plate of V213 to the grid of V216A) was changed from 200 volts to 400 volts

This part is now described as follows:

Part No.	Description
02014040	Cap Pa .1 mfd ± 25% 400V

Purpose of Change

To prevent the possibility of voltage breakdown of this capacitor. Obviously any replacements should be made using the 400 volt unit.

Change #10

The wattage rating of R334 (shown on the schematic below V211) has been increased from ½ W to 1 W. This part is now described as follows:

Part No.	Description
02033770	Res F C 16K ± 5% 1W

Purpose of Change

To prevent failure of this part due to overheating. Any replacements should of course be made with the new part.

Change #11

Some field complaints have been received pertaining to horizontal jitter when receiving a weak TV station. A very critical setting of the horizontal phasing control would usually eliminate the jitter.

This condition has been caused by feedback of the pulses of the horizontal output system into the horizontal sync circuits and video amplifier.

To reduce this feedback it was necessary to make the following changes:

1. In the early models, the plate circuit of V205, the video amplifier, was connected to the junction of R286B and the focus control. With this wiring arrangement, the only time the B+ line going to the video amplifier was completely by-passed by C264B, was when the focus control was at its extreme clockwise position.

In order that this line be adequately by-passed at all times, the B+ line to the video amplifier is now connected to the arm of the focus control. This change is shown in Fig. 1.

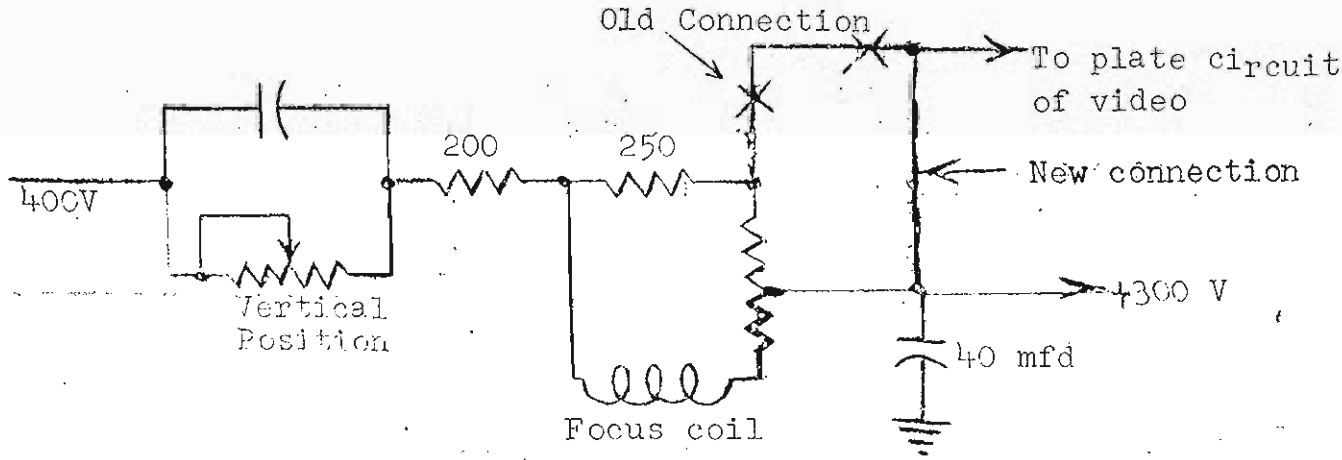

Figure 1

This change reduces the B+ voltage of the video amplifier about 25 to 30 volts but does not noticeably affect the operation of this stage.

2. In addition to the above wiring change, it was necessary to redress certain leads to eliminate pick up in the sync circuits. The proper lead dress is described in items (a) and (b) below and illustrated in Fig. 2.

(a) The lead from the coupling capacitor (C306) to the grid of the sync clipper (V212A) should not be run under the main cable between the two large filter capacitors. Rather it should go straight from the terminal board toward the rear of the chassis, and then after a 90° turn it goes to the grid of V212A so that it passes under the main cable at right angles.

(b) The lead from the high side of the yoke now goes to pin 6 of the 5V4 by running parallel with the main cable through the space between the two large filter capacitors and then to the 5V4. This lead (colored yellow) should go toward the linearity coil after emerging from the grommet and then after a 90° turn to pin 6 of the 5V4.

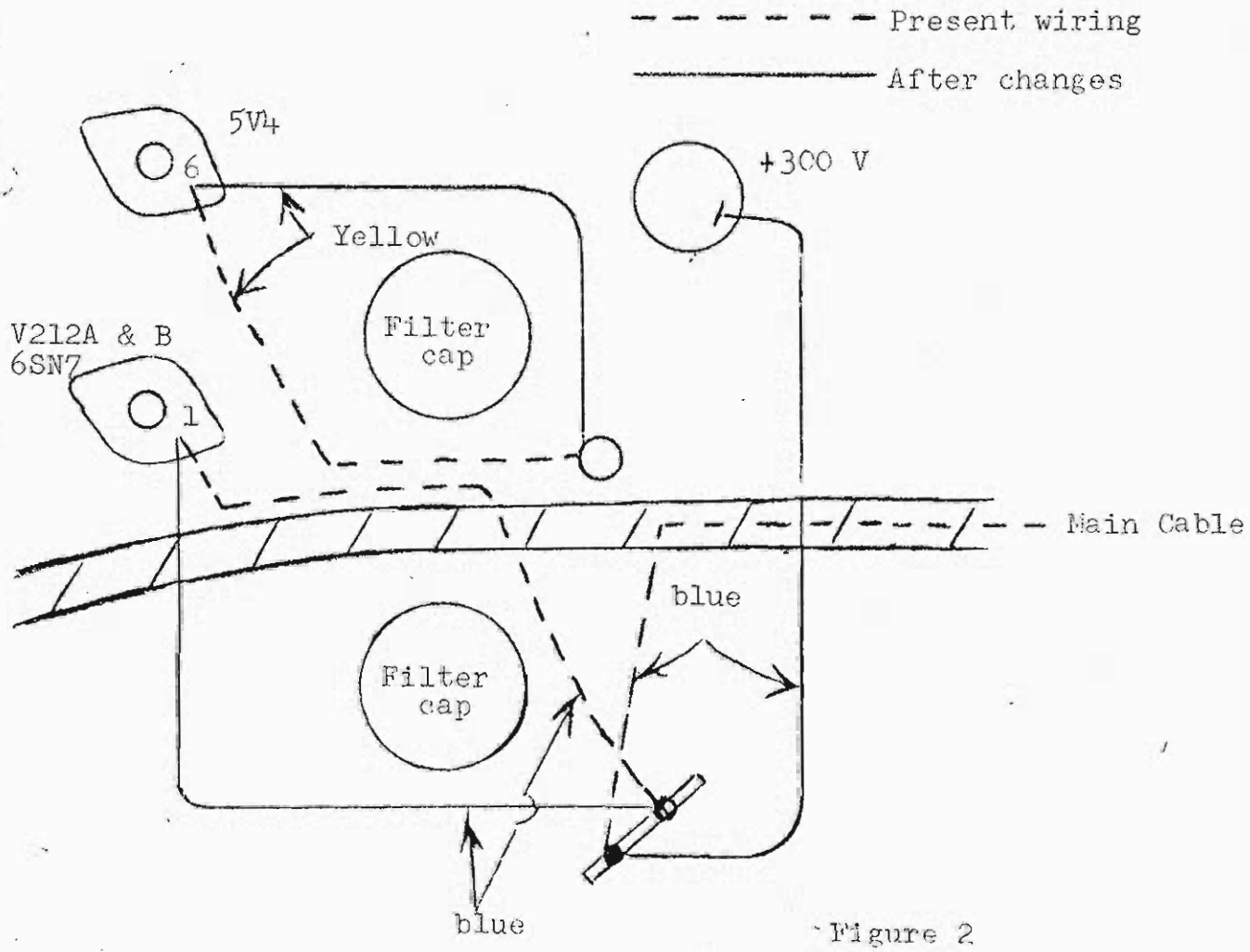

Figure 2

ELIMINATION OF REGENERATION ON CHANNEL 5

Important Notice

A condition known as regeneration has been encountered in the field on channel 5. The sets affected are mainly the RA-110A models, namely the Westwood and Fairfield. It is also possible for the condition to exist in the RA-104A models, namely the Hastings and Wellington.

This condition usually exists in the fringe areas and can readily be recognized by the serviceman. As the contrast control is advanced a pattern of fine black lines runs diagonally across the screen. These are known as "snakes" and are caused by a heterodyne between the third harmonic (79.2 mc) of the video IF (26.4) and the carrier of channel 5 (76-82 mc). Advancing the contrast further will cause the picture to become heavily masked with "snow" which is the effect of the regeneration.

This condition is caused to a major extent, by feedback of the third harmonic of the video IF, from the CRT grid lead back to the antenna and RF section of the tuner. Since the lead to the CRT grid is longer in the RA-104A and RA-110A models, it is obvious why regeneration has been greater in these sets.

1. DO NOT USE TWIN LEAD transmission line. Use co-axial cable only for the transmission line. RG-11/U should be used in the fringe areas. The loss in this cable is approximately 2.1 db per 100 ft. at 100 mc as compared to 2.4 db per 100 ft. of twin lead. RG-59/U should not be used in the fringe area as the line losses are 3.8 db per 100 ft. at 100 mc. The RG-11 is a much heavier cable and its outside diameter is .4 inches as compared to .24 inches of the RG-59/U.

2. Change the bias circuit of the video amplifier V205, from that shown in Fig. 1 to the circuit shown in Fig. 2. In the existing circuit, the bias voltage for the mixer and the video amplifier are taken from the same point. The new bias circuit applies bias to the video amplifier from a different point. The only changes involved follow:

a. Insert a 200 ohm ½ watt resistor between the relay coil and the junction of R233 and C296.
b. Remove the connection between C300 and the junction of R337 and R336. Leave C300 connected to the junction of R219, C215, R218 and L212.
c. Connect the junction of the relay coil and the added 200 ohm resistor to the video amplifier grid circuit at C300.
d. Remove R216 (8.2K), R336 (27K), and R337 (12K.) Add a 6.8K ½ watt resistor as shown in Fig. 3.

3. Insert a resonant trap coil in series with the CRT grid lead as shown in Figure 3.

4. Add a .005 mfd disc ceramic capacitor from pin 3 of V203 to ground. (Filament of third video IF amplifier). The description of the added parts follow:

Part Number	Description
02030310/RC20BF201J alternate numbers 02050310, 02040310	Res F C 200 ohms ± 5% ½W
02031870/RC20BF682K	Res F C 6.8K ± 10% ½W
21005411	Coil, trap 79 mc
03015610	Cap F Ce .005 mfd 450V

If any difficulty is experienced after these changes have been made, please contact the Teleset Service Control Department.

These changes are now incorporated in the current production receivers.

The first chassis affected by this change are identified as follows:

Model	Serial Number
RA-103D	0328476
RA-104A	048401
RA-110A	1011400

A large letter "H" stamped on the rear of the main chassis also identifies it as containing these changes.

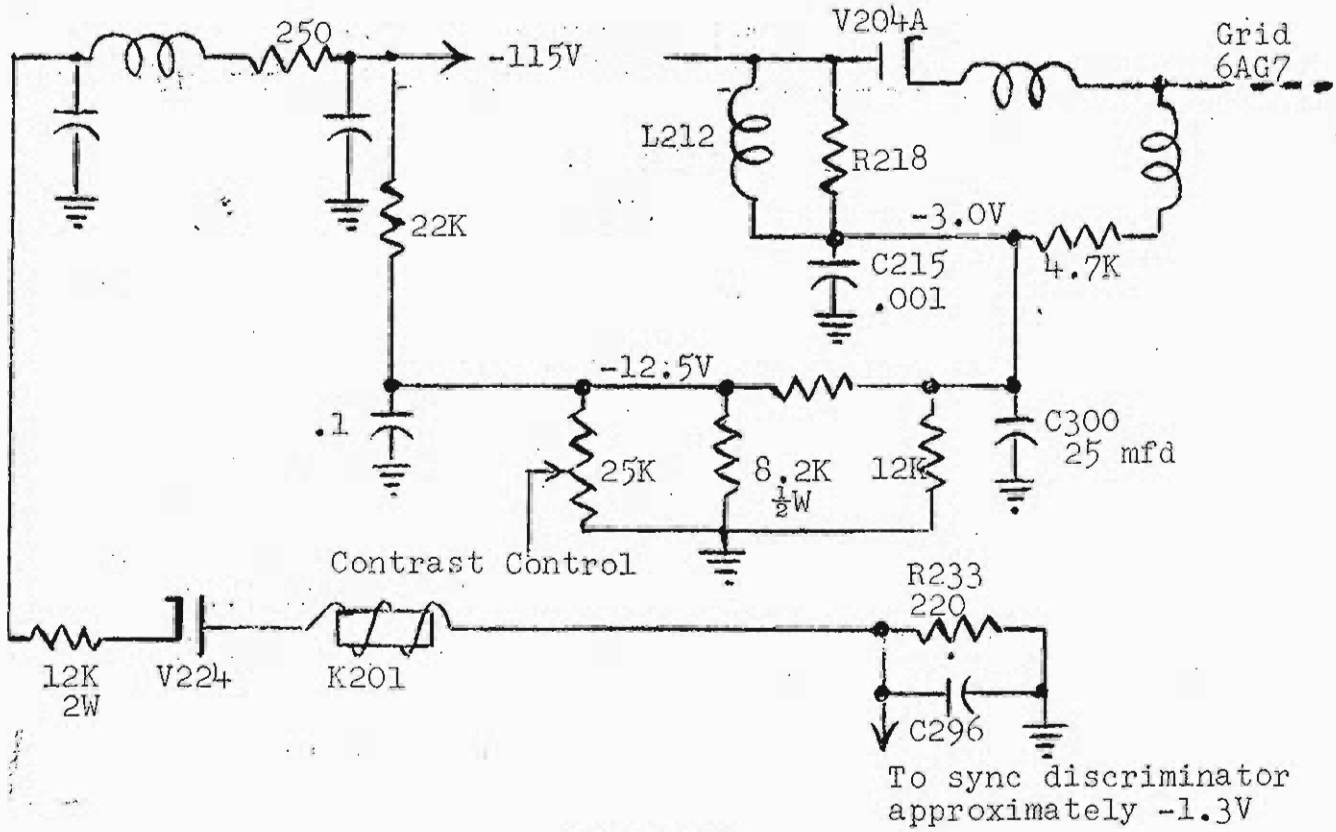

Figure 1

Present Bias Circuit

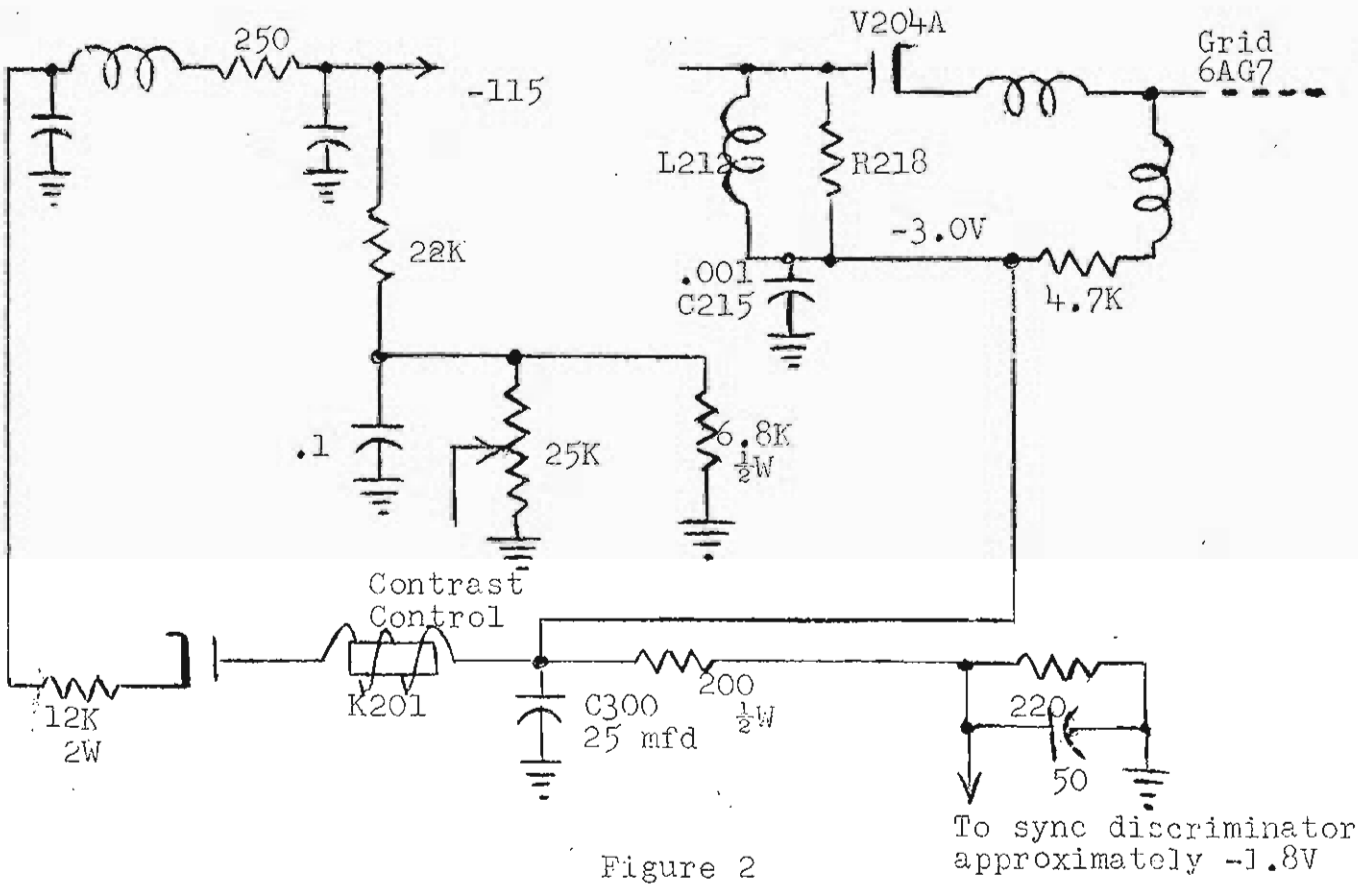

Figure 2

Proposed Bias Circuit

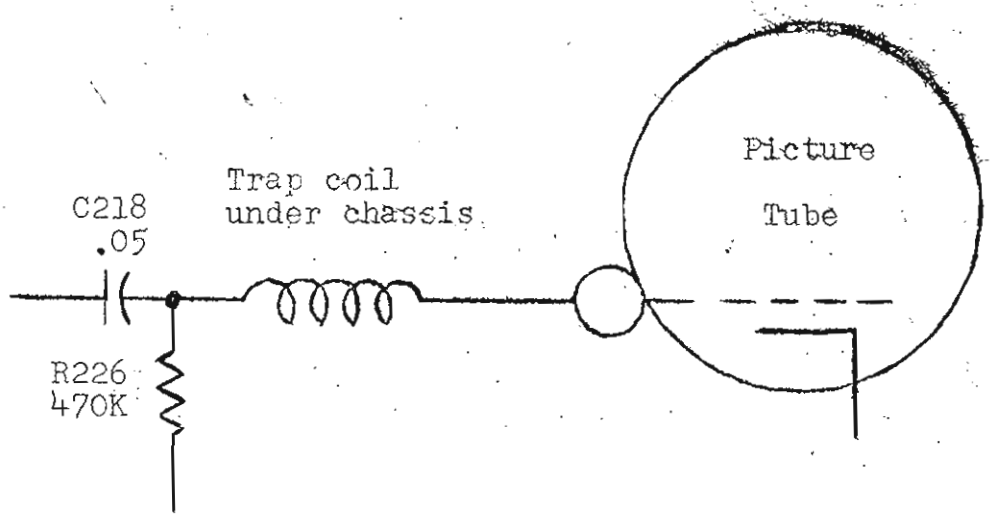

Figure 3

Location of Trap

ELIMINATION OF REGENERATION ON ALL CHANNELS

In addition to the regeneration problem on channel 5 for which a cure has been effected, a number of field complaints have been received concerning regeneration on all channels.

The complaints have been initiated primarily by dealers and service organizations in the fringe area. The condition has been noticed on the RA-104A and RA-110A models particularly and in some RA-103D models.

To eliminate this problem, several changes are to be made in the video IF strip and one change in the video amplifier. See Figure 1 for a simplified schematic. Those items affected are indicated by an encircled numeral. The numeral refers to the step to be made in the following procedure.

1. Add a 10K ½ watt 5% resistor across L207. Identify it as R353.
2. Change C211 (connected across L209) from 10 mmf 500V to 15 mmf 500V
3. Change R211 from 3.9K ½ watt to 15K ½ watt.
4. Add a 22K ½ watt 5% resistor across L210. Identify it as R352.
5. Remove R218, the 18K ½ watt resistor connected across L212 in the video detector input circuit. (In earlier sets R218 was was 39K and in some of the later sets there are two 39K resistors connected in parallel. See change #7 on page 12a of this section).
6. Add a 22K ½ watt 10% resistor across C217 and L216. (This is the 4.5 mc trap). Identify it as R351. (not shown in Fig.1)
7. Change L209 (color code red white) part number 21004801 to part number 21004802 (color code red orange).
8. Change L213 (color code yellow) part number 21004467 to (color code green) part number 21004464.

The part numbers of the new parts other than the coils mentioned in items 7 and 8 above, follow:

Symbol	Part Number	Description
R353	02030720/RC20BF103J	Res F C 10K ± 5% ½W
C211	03012050/3-1205	Cap F Ce 15 mmf 500V
R211	02030760/RC20BF153J	Res F C 15K ± 5% ½W
R352	02030800/RC20BF223J	Res F C 22K ± 5% ½W
R351	02031930/RC20BF223K	Res F C 22K ± 10% ½W

In addition to reducing regeneration, these changes will also improve picture quality.

Figure 1. Simplified schematic showing changes necessary to reduce regeneration on all channels and improve picture quality. The only items affected are indicated by an encircled numeral. See page 13d for detailed instructions. There are no wiring changes, only additions and deletions of certain components and changes in value of certain other components.

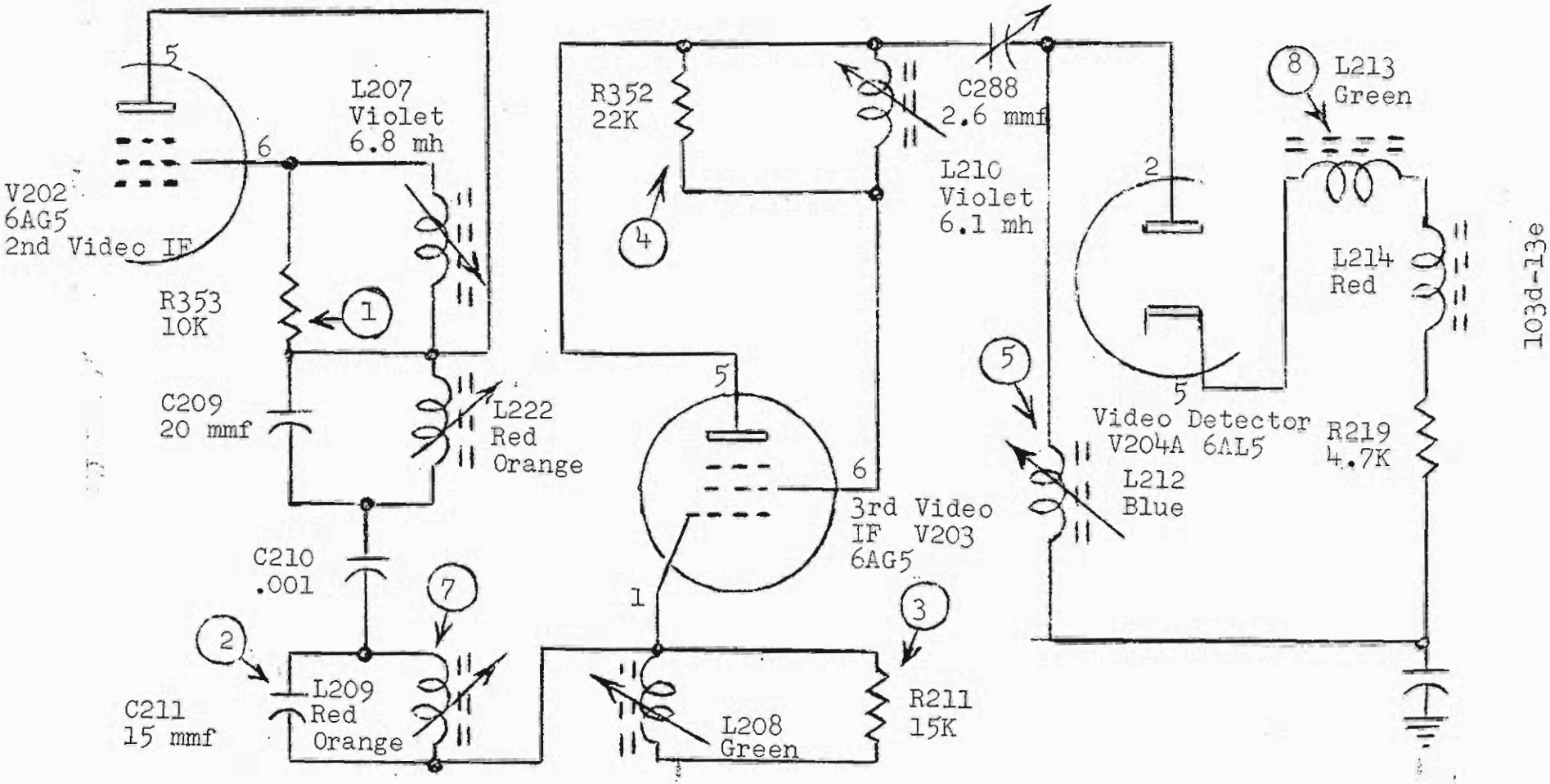

REGENERATION ON CHANNEL 7

Separate from the complaints of channel 5 regeneration and all channel regeneration, complaints of a "beat" on channel 7 have been received.

This "beat" does not exhibit itself in the form of diagonal black lines referred to as "snakes" in the note on channel 5 regeneration. Instead, the indications consist of black streaks running horizontally through the picture when the set is tuned "on the nose" to channel 7.

This condition is caused by the eighth harmonic (175.2 mc) of the sound IF (21.9 mc) beating with the video carrier of channel 7 (175.25 mc).

Circuit changes designed to eliminate this condition in the current production Telesets are now being prepared. You will be notified of these changes and the chassis incorporating the modification as soon as they are made.

Meanwhile, the effect may be eliminated by slightly detuning the sound discriminator transformer.

Alignment Procedure for Teleset Models RA-103D, RA-104A, RA-110A

Please make the following correction in the subject procedure:

The top photo shows the primary of Z203 on top of the chassis and the bottom chassis photo shows the secondary of Z203 on the underside of the chassis. These designations should be reversed.

RA-103D, RA-104A, RA-110A SECTION

On pages 8 and 9 in the RA-103C section a procedure for elimination of flicker due to line voltage variations is described. It was also mentioned that if the modifications listed did not eliminate the trouble, then it would be necessary to resort to the use of a constant-voltage transformer.

The use of such a transformer is not confined solely to the RA-103C Telesets (Chatham, Savoy, etc.). It should be used in many locations especially with the RA-110A models (Fairfield and Westwood). Unlike the RA-108A models (Bradford and Mansfield) which contain a self-regulating power transformer, the RA-110A is affected by line voltage fluctuations.

Many of the complaints received on the Westwood and Fairfield Telesets pertaining to "jumping" or "pumping" (slow flicker) of the picture, lack of sharpness or definition, may, in many cases, be caused by either a fluctuating or low line voltage, depending upon the nature of the complaint. It is desirable, therefore, that dealers and service organizations stock one or more of the Sola constant-voltage transformers for use with these Telesets.

Installations in show rooms, or other locations where these sets are subject to public observation should be made using such a transformer if the line voltage is not stable.

These transformers are identified as the Sola CVA constant-voltage transformer and may be obtained from the Teleset Service Control Department. The list price of this item is $37.50.

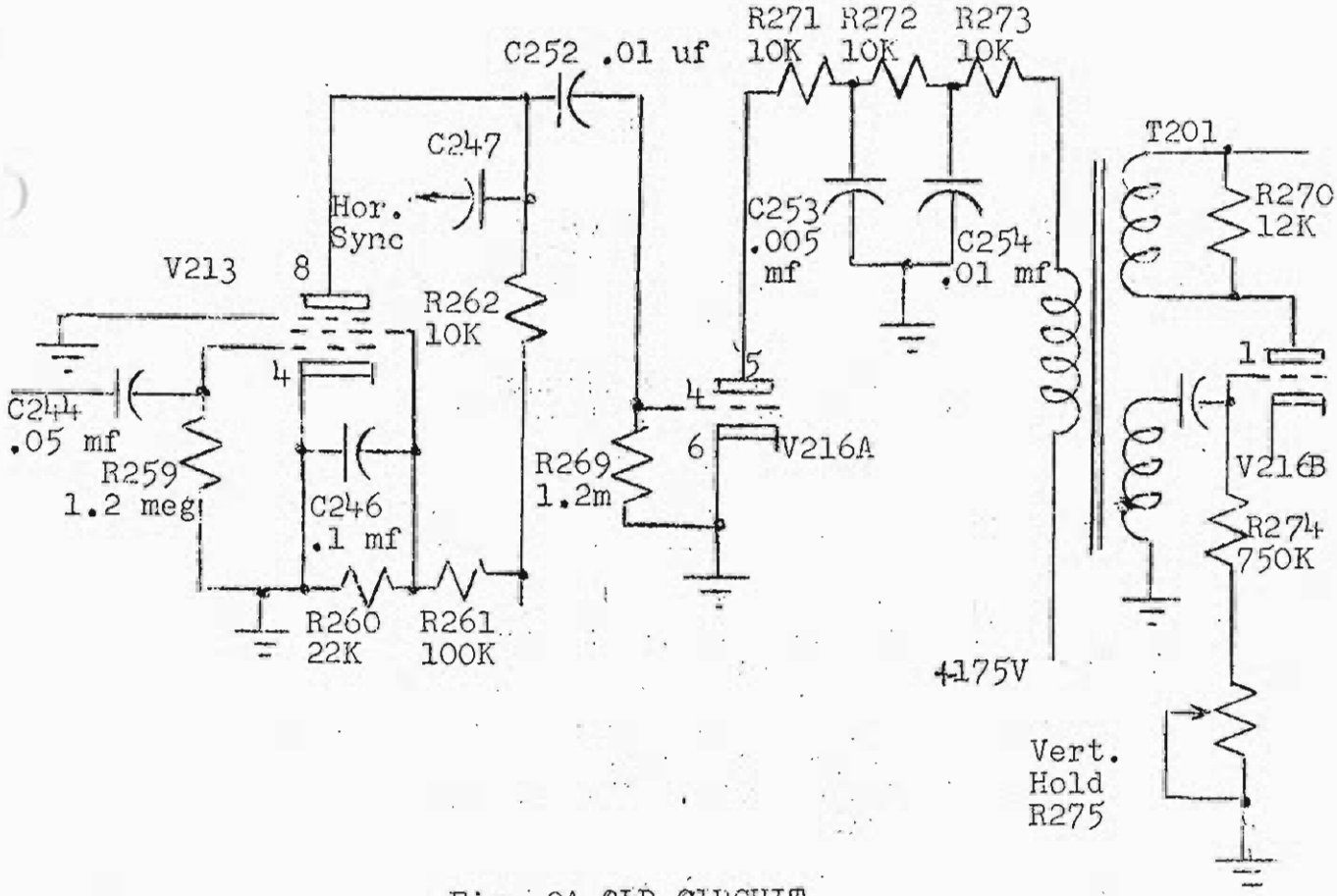

Fig. 2A OLD CIRCUIT

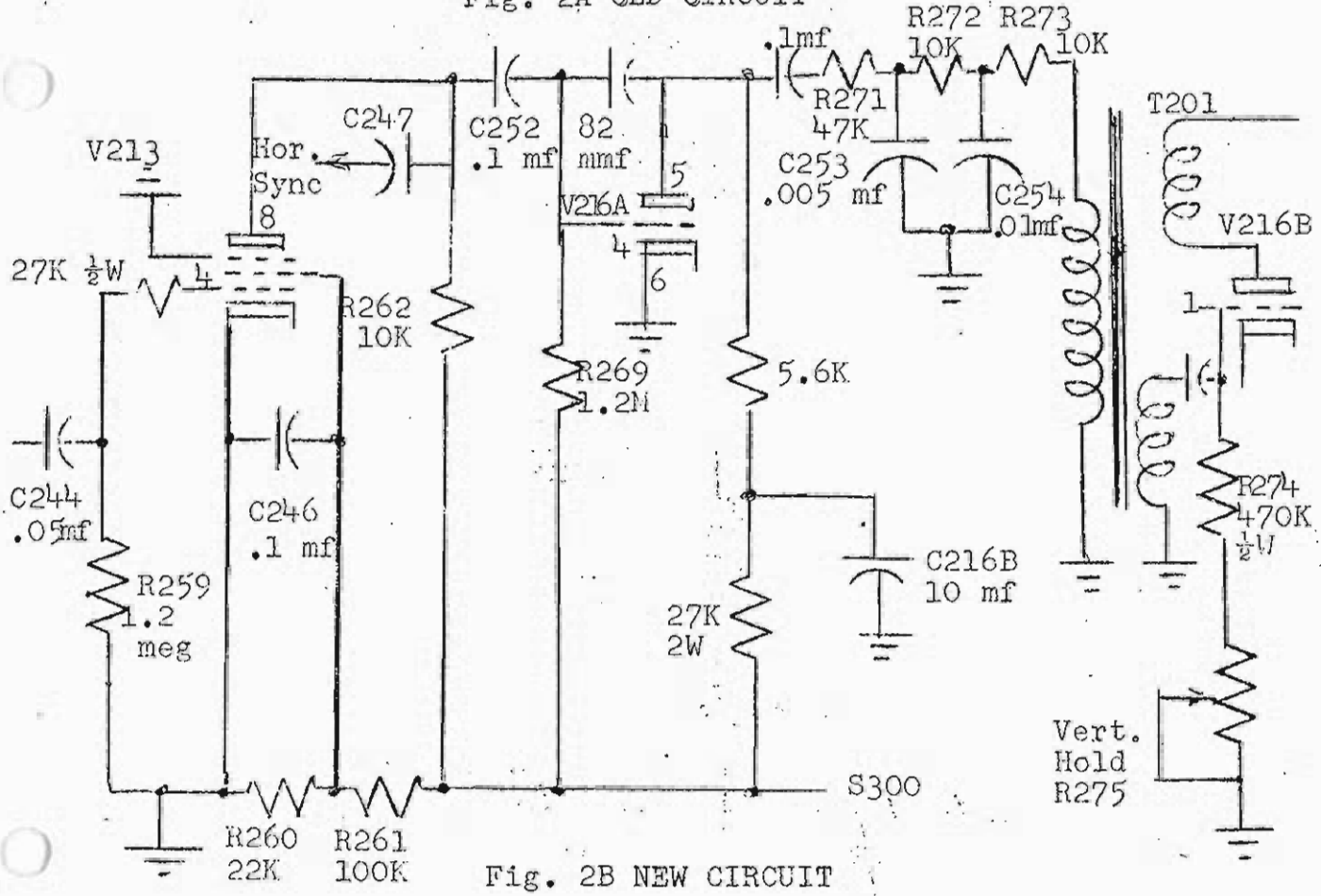

Fig. 2B NEW CIRCUIT

List of Parts Used in Modification

Quantity	Number	Description
1	25000580	6AG7 amplifier tube
2	02037870	6.8K, 2 watt resistor
2	RC20BF273K	27K, ½ watt resistor
1	RC21BF123K	12K, ½ watt resistor
1	RC20BF183K	18K, ½ watt resistor
1	RC21BF474K	470K, ½ watt resistor
1	RC21BF562K	5.6K, ½ watt resistor
1	RC41BF273K	27K, 2 watt resistor
1	03020420	82 uuf 500 volt capacitor, either mica or ceramic
1	03015310	25 uf 25 volt electrolytic capacitor
2	3-1391	0.1 uf 200 volt capacitor
1	RC21BF473K	47K, ½ watt resistor.

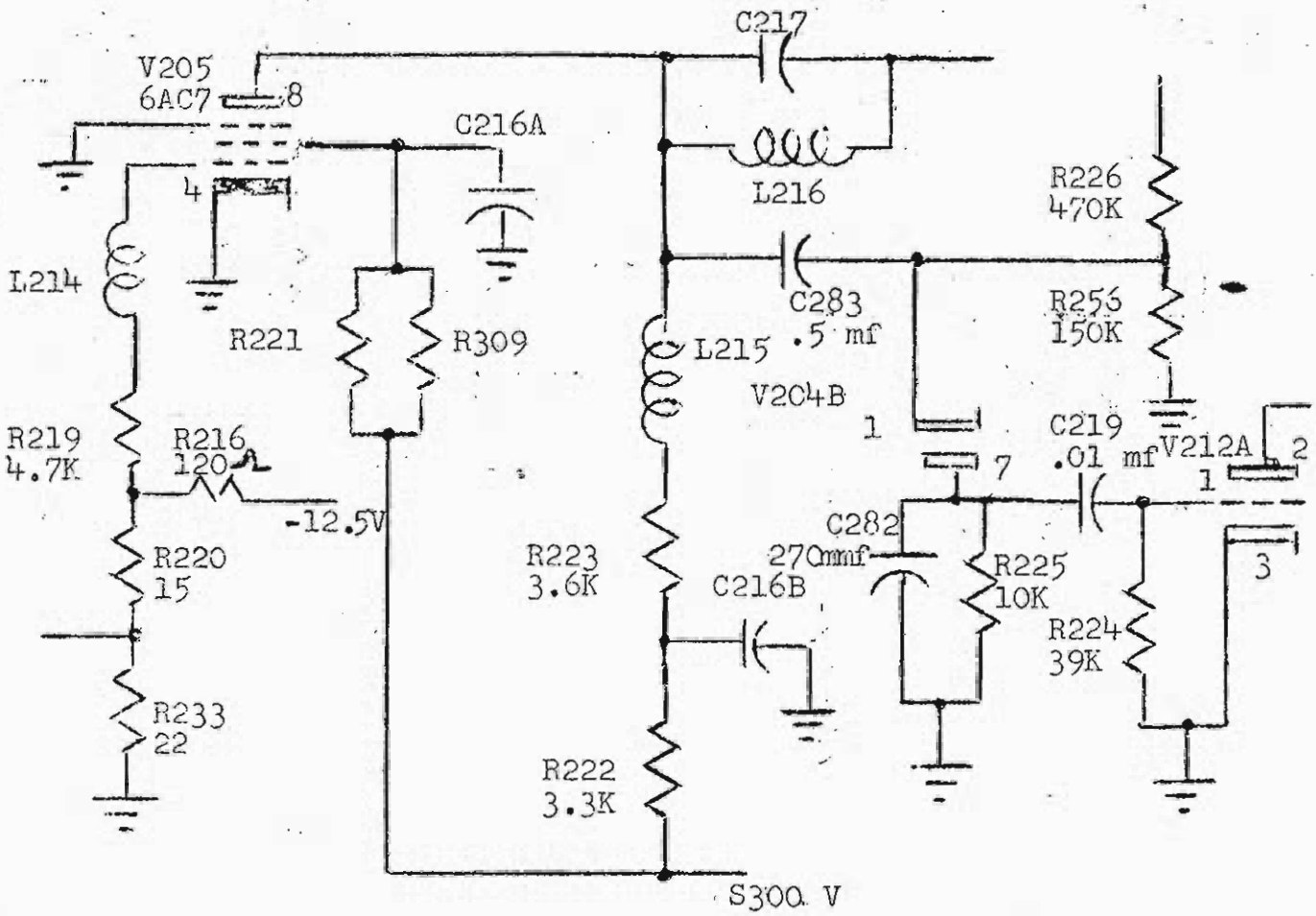

Fig. 1A OLD CIRCUIT

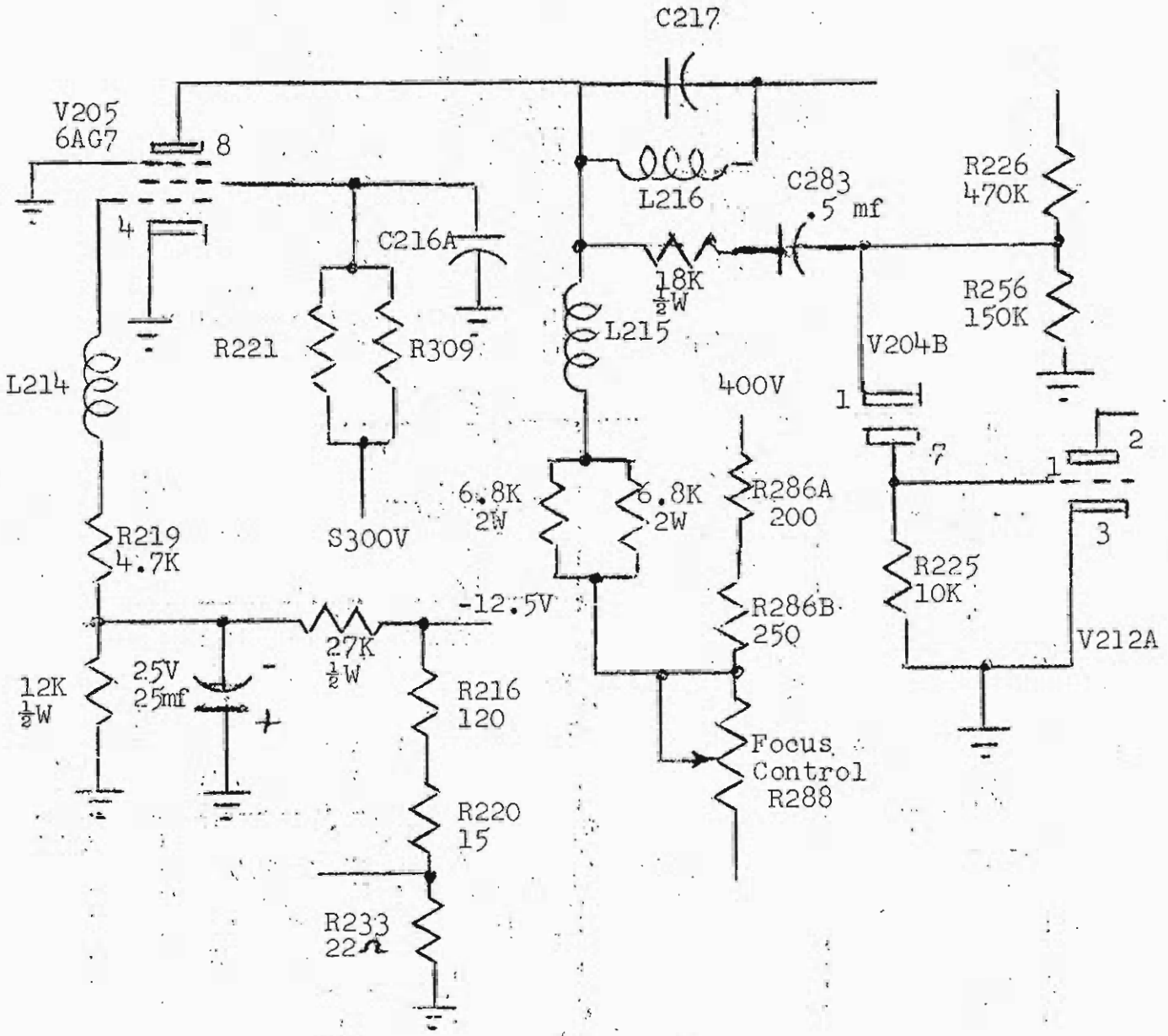

Fig. 1B NEW CIRCUIT

RA-105 -- RA-106 SECTION

This section is devoted to information pertaining to the RA-105 and RA-106 Telesets. The information on the two Telesets is combined in one section because there is a great deal of similarity between these two sets.

The models produced under the two different types follow:

RA-105A	RA-106A
Stratford	Club 20
Westbury	Manchu
Whitehall	
Colony	

The main chassis is the same in both the RA-105 and RA-106 sets. The RA-105 series uses a 15 inch cathode ray tube whereas the RA-106 uses a 20 inch cathode ray tube. Because of the deflection requirements of these two tubes, a slightly different power supply is used on both these Telesets.

Complete schematic diagrams for both the RA-105 and RA-106 Telesets are supplied with the RA-105 Service Manual. These manuals are available at a cost of $0.75 each.

Index RA-105 -- RA-106 Section

As mentioned in the previous page two models of the RA-106A were produced. The Club 20 uses a main chassis and a power supply chassis. The main chassis is the same as used on the RA-105 Teleset, whereas the power supply is slightly different than that used with the RA-105 model The circuit diagram for this RA-106 power supply is included in the RA-105 service manual. The other model known as the Manchu is a complete home entertainment unit:

Receiver Main Chassis (Same as used in Club 20)
Flyback Power Supply (Same as used in Club 20)
AM Tuner (Same as used in Colony)
Push Pull Audio Amplifier (Same as used in new Colony)
Webster Model 256 Dual Speed Record Player.

Two speakers are used in this Teleset:

One three inch speaker assembly (part #18002811) located at the front of the cabinet and one 12 inch high quality speaker (part #18002821) located beneath the cabinet. (This 12 inch speaker is electrically the same as part #18002801 as used in the new Colony; the difference in part number is due to the different lead length.)

This Teleset has an unusual feature that permits the entire cabinet containing all the electrical equipment to be swivelled throug 180°. This permits the tube to be viewed from various angles as desired by the customer. Upon receipt of this Teleset from our factory very close adherence to the unpacking instructions should be followed. These unpacking instructions are included with each Teleset. In addition to this the following information is presented for your benefit:

1. DO NOT install with the set touching the side of a wall. The side of the table should not come any closer than three inches to the wall. When the cabinet is swivelled the top edge of the cabinet can conceivably hit the wall and thus cause severe damage to the wall and the Teleset.

2. DO NOT remove any bolt from underneath the Teleset other than the hex head bolt located on the center metal rail below the cabinet base. A yellow tag is fastened to this bolt to identify it. An Allen head set screw is also located adjacent to this bolt. Removal of this screw will cause the cam follower to fall out and thus permit the cabinet to swivel completely around.

When rotating, the cabinet should be held at the front. It would be very difficult to rotate by grasping from the rear.

The Audio Amplifier used with this Teleset is the same amplifier that is incorporated in the new RA-105 Colony Telesets. However, a 5W4 rectifier tube is used in place of the 5Y3. This is necessary inasmuch as the tube manufacturers do not recommend horizontal mounting of the 5Y3 as it is possible for the filament to sag and short against the plate.

On the Manchu Telesets at high line voltages (about 129 volts) the focusing may not be satisfactory. To improve focus, move the "chimney" (this is the metal support that holds the yoke and focus coi assembly and is affixed to the inside of the cabinet) back to permit better focusing. This is accomplished by removing the 2 screws that are mounted in T nuts and replacing with wood screws in the new location. The deflection yoke will of necessity have to pushed up as far as possible to the front of the tube and then the focus coil can be adjusted for best focusing.

RA-105 - RA-106 Section

The following list indicates the changes made in the RA-105 and RA-106 Telesets since the issuance of the RA-105 and RA-106 schematics:

CHASSIS	CHANGE	REASON
Main Chassis (RA-105 - RA-106)	Tolerance of A.C. line capacitors C279 and C280 is changed from ± 25% to ± 20%	To satisfy underwriters requirements.

ANTI-FLICKER CIRCUIT

The schematic shown below illustrates changes made in the RA-105, RA-106 main chassis to reduce flicker. The flicker referred to results from periodic line voltage fluctuations such as are produced by reciprocating pumps and like devices. This change is sometimes referred to as an "anti-flicker circuit".

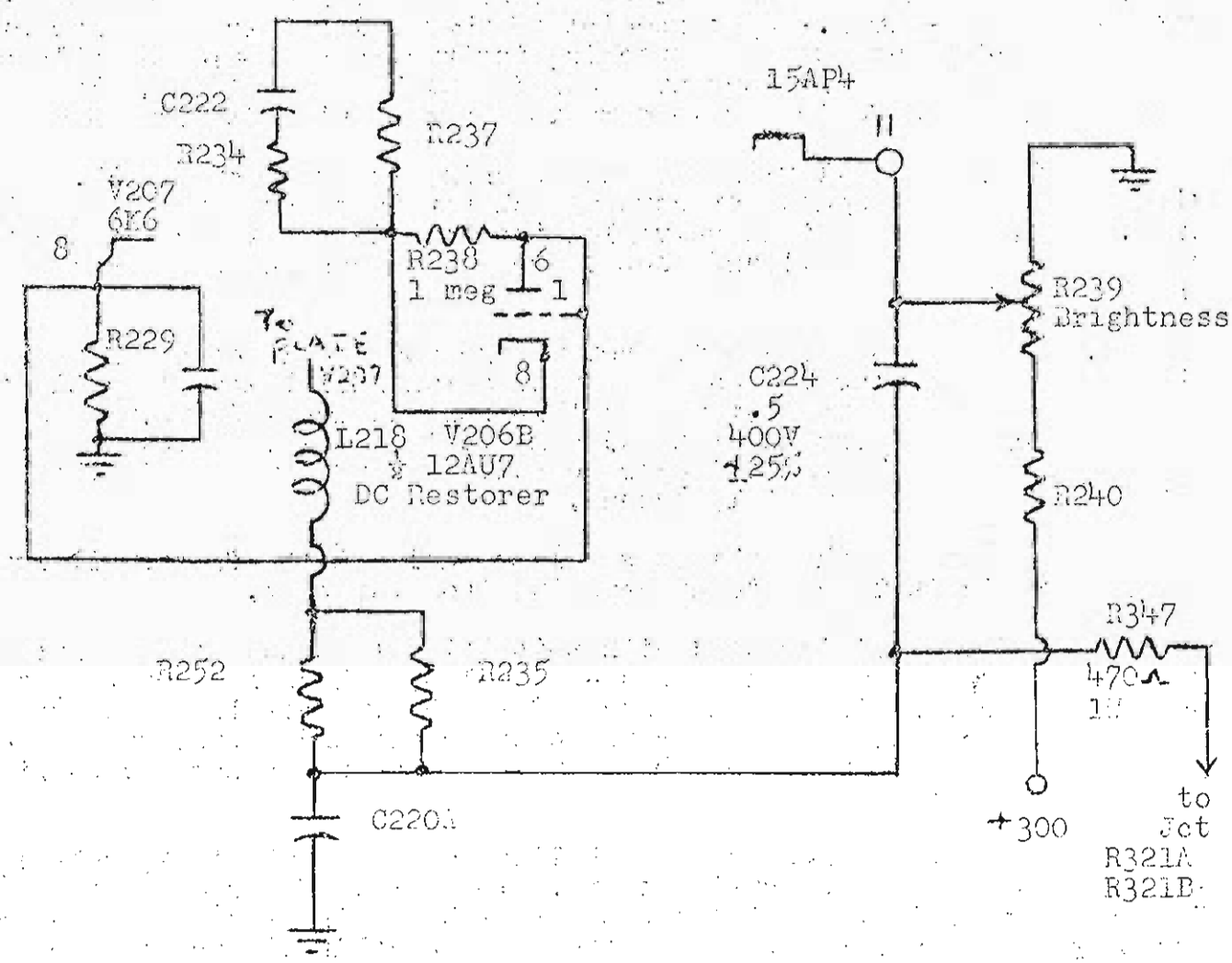

The list of changes follow:

1. Pins #6 and #7 on V206-B the DC restorer tube are removed from ground.

2. Pins #6 and #7 on V206-B are connected together and a lead is run from pin #6 of V206-B to pin #8 of V207, thus returning the DC restorer to the cathode of the third video amplifier instead of ground.

3. Capacitor C224 is changed from .1 200V ± 25% to .5 400V ± 25%. The part number of the new capacitor is 03014260.

4. Capacitor C224 is connected between pin #11 of the CRT and the junction of R235 and C220A.

5. Resistor R347 470 ohms 1 W 10% (part #02034730 alternate part #02044730) is connected in series between R232 and R321.

AGC CHANGES

Very humid weather normally encountered in the summer months has been the cause of considerable difficulty with the AGC circuit as used in the early RA-105 Telesets. The condition that is normally encountered was a fading of both picture and sound. When the serviceman checks the set he usually finds that all components are normal and is at a loss to determine the reason for the faulty operation of the receiver. Where this trouble is encountered it is recommended that the following changes in the AGC circuit be made. These changes have been included in production on all of the sets made after March, 1949. The purpose of these changes is to reduce the impedance of the grid circuit of the 6AT6 AGC stage and thus improve the stability of this circuit. The list of changes follow:

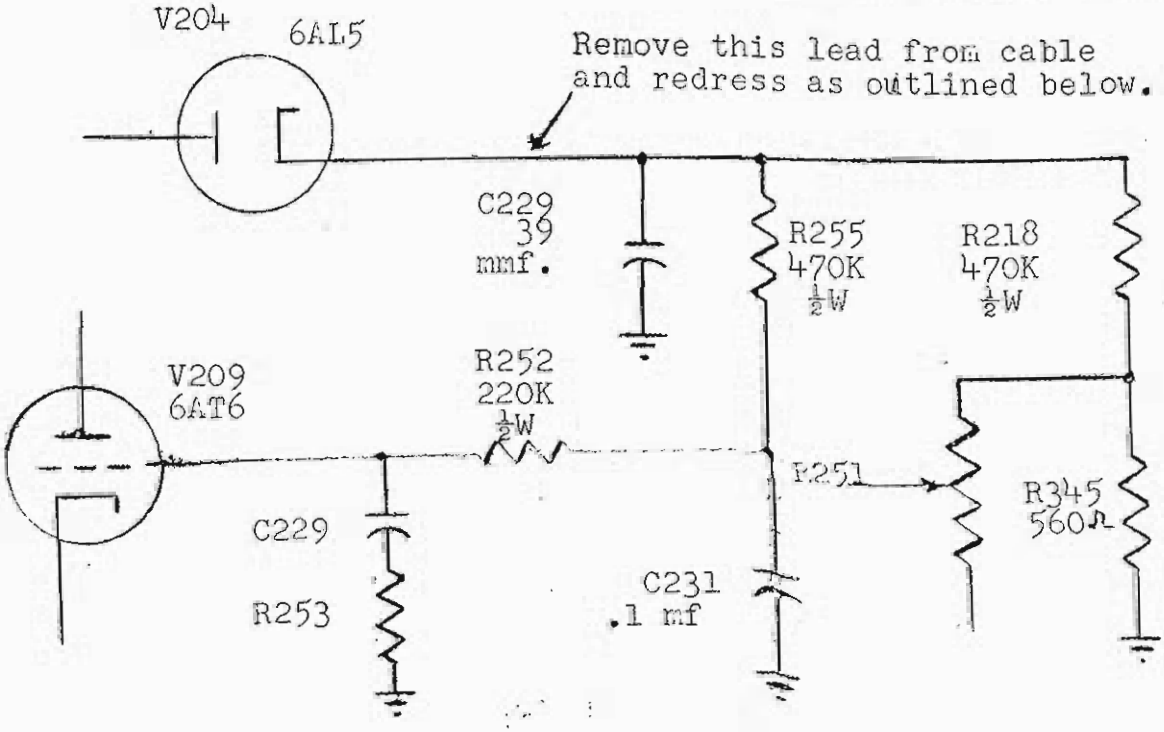

The list of changes follow:

R218 was changed from a 1.2 meg. resistor to 470K, ½W, part number 02032090. It was disconnected from the junction of R252, R255 and C296 and connected to the junction of R345 and R251.

R252 has been changed from a 1.2 meg. resistor to 220K, ½W, part number 02032050.

R255 and C231 are no longer used.

R345 is changed from a 390 ohm resistor to a 560 ohm ½ watt resistor, part number 02031740.

A 470K, ½ watt resistor, part number 02032090 between pin #5 of V204 and the junction of R252 and C231 was added.

A 39 mmfd. 500 volt ceramic capacitor, part number 03017030 from pin #5 of V204 to ground was added.

C231 was changed from a .005 mfd. capacitor to a .1 mfd. 200 volt capacitor, part number 03013910.

In addition to the above changes the blue lead that runs through the cable from pin #5 of the 6AL5 (V204) to V209 (AGC circuit) should be removed from the cable. This lead should be run as short as possible. A simple method of dressing this is to go through a hole in the RF shield (this shield is the one on which the traps are mounted) to the 6AT6 circuit.

ADDITION OF ADJACENT CHANNEL VIDEO TRAP

In certain areas where television signals are received on two adjacent channels (such as half way between two cities having television stations) adjacent channel video interference has been observed on RA-105 and RA-106 Telesets. When tuned to the lower frequency channel of two such adjacent channels, interference is usually seen as horizontal sync running back and forth through the desired signal.

This may be corrected in the field by the addition of a series-parallel resonant trap in the third video IF amplifier as illustrated in Fig. 1. (Note the latest RA-105 and RA-106 Telesets include this trap).

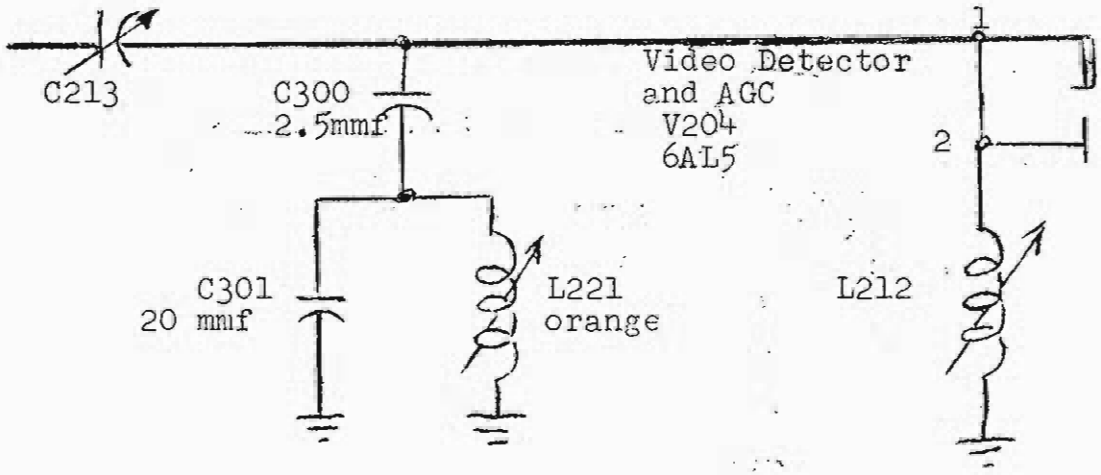

Figure 1

This trap will be tuned to 20.4 mc. This 20.4 mc is obtained when the local oscillator beats with the video carrier of the channel above the desired channel. Consider a location where both channel #5 and channel #6 can be received. With the Teleset tuned to channel #5, 76-82 mc, the local oscillator is tuned to 77.25 mc (video carrier of channel #5) plus 26.4 mc or 103.65 mc. The local oscillator signal also beats with the video carrier of channel #6 (83.25 mc) and produces a frequency equal to the difference between 103.65 mc and 83.25 mc which is 20.4 mc.

The parts used follow:

C300	03002720	Cap Ce 2.5 mmfd ± .5 mmfd 500V
C301	03013800	Cap Ce 20 mmfd ± 5% 500V
L221	21003971	Variable Inductance

Trap Assembly:

Connect the 2.5 uuf capacitor to the lug to which the end of the winding closest the lug is soldered, leaving ½" of wire between the body of the capacitor and the lug.

Connect a 2½" length of #18 bare-tinned copper wire to the other lug of the inductor. Connect the 20 uuf capacitor across both of the lugs of the inductor. See Fig. 2.

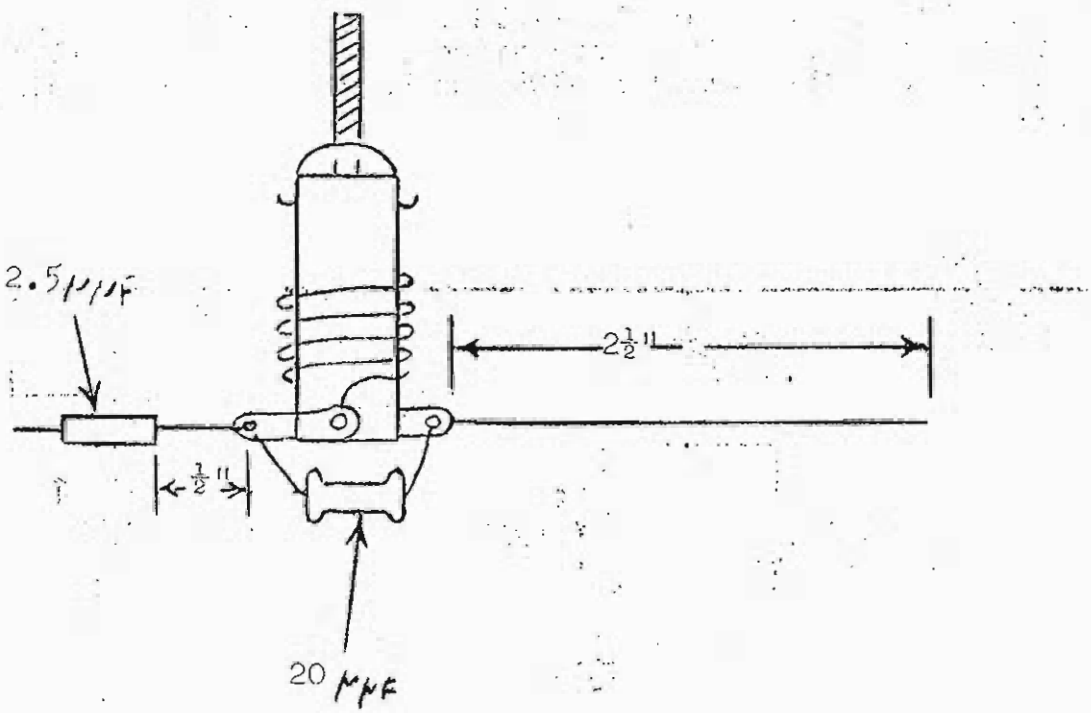

Figure 2

Installation:

Carefully enlarge the "keyhole", to 13/32 diameter, in the video IF amplifier shield plate using a Parker-Kalon Metal Punch XX. See Fig. 3.

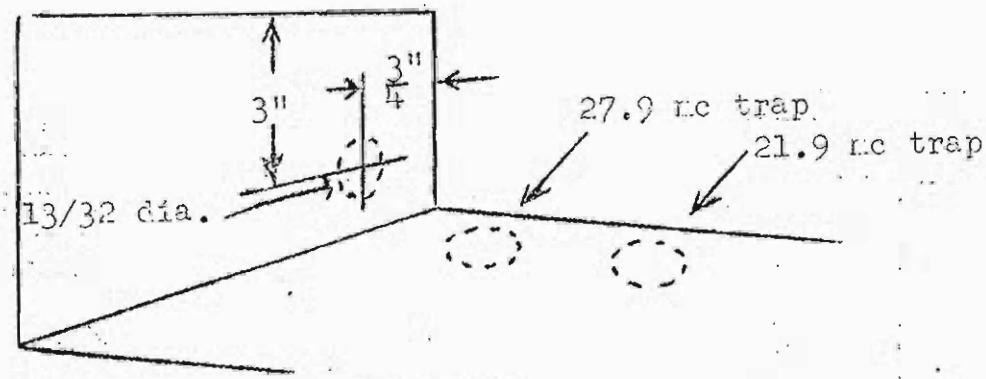

Figure 3

Use extreme caution when punching this hole so that alignment will not be disturbed.

Insert the trap assembly in the hole so that the lugs are parallel to the main chassis and with the bare wire away from the main chassis. Solder the bare-tinned wire to the ground lug directly beneath on the main chassis. Solder the free end of the 2.5 uuf capacitor to the junction of L212, C213, and Pins 1 and 2 of V204.

Tuning Procedure:

The trap may be tuned using a signal generator or by utilizing the interfering station.

A. Setting the trap by signal generator:

Turn the contrast control to the extreme right. Connect a signal generator, 30% modulated at a carrier frequency of 20.4 mc to pin 1 (grid) of V201 and chassis. Connect an oscillograph between pin 4 (grid) V205 and ground. Adjust coil for minimum deflection of the oscillograph.

B. Setting trap using two adjacent stations:

Tune receiver to sound of lower channel. Adjust contrast and watch for the interference. Tune trap from maximum inductance toward minimum inductance until the interference disappears. Rock trap tuning back and forth to be certain that trap is correctly set.

RA-105, RA-106 Main Chassis

Circuit Change to Eliminate "Hook"

The following changes were made to eliminate the horizontal displacement or "hook" in the top of the picture.

The changes are indicated in the following schematic:

RA-105 AM Tuner Change

In the latest models of the AM Tuner C510 has been changed from 8 mfd 450V to 16 mfd 450V. In addition the filter has been changed, and as shown in the following sketch, by adding C513, R513 and R512.

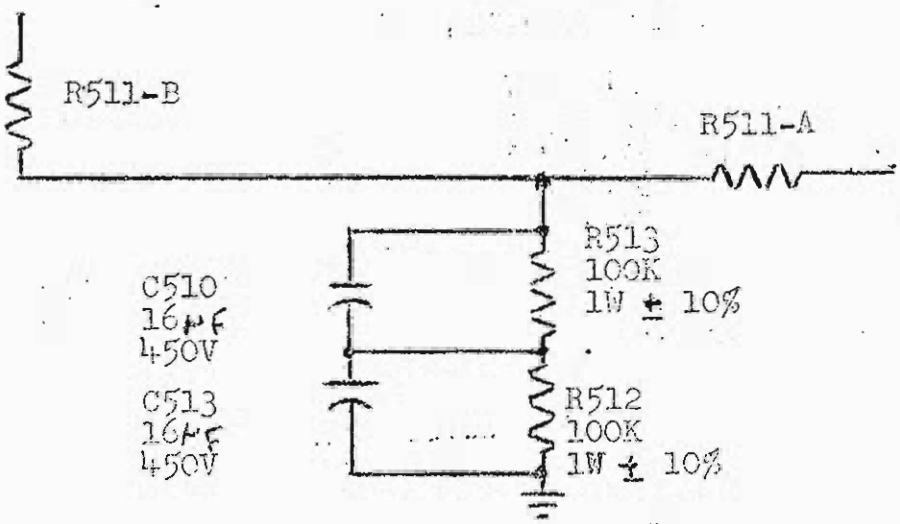

The description of these new parts follow:

C510, C513	03002050	Cap E 16 mfd 450V
R512, R513	02045010	Res F. C 100K 10% 1W

EXTENSION CABLES FOR RA-105 and RA-106

Extension cables designed to allow the Main Chassis or Power Supply Chassis of the RA-105 or RA-106 Teleset to be serviced outside the cabinet while leaving the tube or other chassis in the cabinet are now available.

These cables are 6 feet long. This length will permit the serviceman to work on the chassis in front of the Teleset and view the action on the face of the CRT while making any checks.

The description of these cables follows:

Part Number	Where Used	List Price
34001281	Between CRT base and Main Chassis (J206)	$2.70
50014161	Between Yoke Focus Assembly (P604) and Main Chassis (J204)	3.42
50014171	Between Main Chassis (P201) and Power Supply (J401) on RA-105 Between Main Chassis (P201) and Power Supply (J702) on RA-106	2.70
50014180	Between Main Chassis (P202) and Power Supply (J402) on RA-105 Between Main Chassis (P202) and Power Supply (J701) on RA-106	3.42

When servicing the AM Tuner or the Audio Amplifier in the new Colony or in the Manchu, it is possible to use cable #50014171 as the extension. The use of this cable will introduce hum in the output since the signal lead of either unit should be shielded. The serviceman should take this into consideration when using this cable.

Cables #50014161 and #50014180 are exactly the same as far as external appearance are concerned. However, cable #50014180 contains the sync line between the main chassis and the power supply chassis and this line is a shielded lead. In the first supply of cables sold, this cable was identified by a ring of red paint on the male plug. This cable is now identified by a red tracer running through the entire length of the cord.

A complete set consists of the 4 cables and will permit the removal of both chassis simultaneously if necessary. However, for the high voltage connections if the power supply is removed an improvised cable can be made up in the field. This cable consists of a suitable length of high voltage cable with an alligator clip on each end. Obviously the serviceman should be careful how he "dresses" this lead to prevent "arcing".

ERRATA SHEET FOR THE RA-105 SERVICE MANUAL

Several errors in the RA-105 Service Manual have been brought to our attention. The corrections for these errors follow:

On page 48 under "Miscellaneous Parts List RA-105" the following part numbers with the descriptions should be deleted:

45000211 Assembly Vernier Dial
45000221 Assembly Main Dial
45000221 Pointer Dial

In their place show:

45000242 Dial Inputuner

On Receiver Main Chassis schematic (for serial numbers 8,500,001 -- 8,501,000).

1. Connect pin #6 of V201 to junction of C204 and R205.

2. The resistor in the cathode circuit of V224 identified as R376 should be identified as R326.

On page 43 step #9 of the Video IF Alignment table, in the column headed "Connect Generator Leads Across" add an asterisk as shown below:
Pin 1 (grid)*
V102 and chassis

In step #3 of the Sound IF alignment table in the column headed "Connect Generator Leads Across" delete the asterisk.

On page 38, trouble #3 under "Picture Section", the wording "Defective CRT. (Grid-cathode shorted)" should be changed to read "Defective CRT. Cathode-filament short)".

On the detailed block diagram, in the block for V401-A, the abbreviation Amp. should be changed to "Maker".

On the Main Chassis diagram dated Nov. 15, 1948, the voltage measurement for pin #2 V220 should be 135 volts instead of 13.5 volts.

The schematic of the Main Chassis (dated Nov. 15, 1948) should be corrected as shown in the following sketch:

(The error is in the volume control circuit, where R336 is shown shorted out and the "hot" wire of the shielded lead is shown grounded. The sketch shows the correct connections).

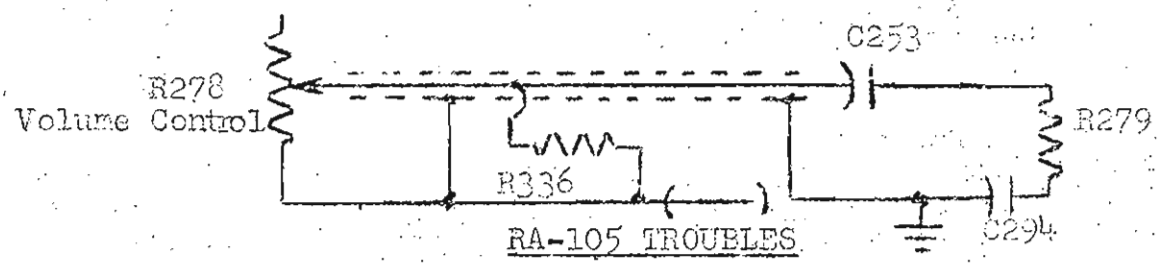

RA-105 TROUBLES

Investigation into complaints that the face of the CRT on the RA-105 Telesets were getting dirty disclosed the following:

The CRT assembly was not positioned far enough forward in the cabinet. This allowed a space to exist between the safety glass and the CRT assembly thus permitting dust and dirt to seep in and accumulate on the face of the CRT.

It is possible that in shipment, the CRT assembly may shift; the serviceman should therefore, be sure that the CRT assembly is completely forward so that the front of the assembly is up against the safety glass.

If, with the CRT assembly pushed all the way forward, the face of the assembly does not fit up against the safety glass, please get in touch with us so that the necessary steps can be taken to correct the condition.

Also, if any RA-105's are found wherein the tube assembly is completely forward, yet the face of the tube still gets dirty within a short time, please advise us stating all the details.

RA-105 AGC Control

A defective 6AT6 in the AGC amplifier position may result in "drift" of the AGC setting which would become apparent as a change in sensitivity of the receiver as it operates. In such cases the 6AT6 should be replaced and the AGC readjusted as described on page 22 of the Service Manual.

It is also possible that an accidental change in the AGC setting during shipment might result in low sensitivity, necessitating readjustment of the control.

AGC Adjustments

It is possible to adjust the AGC control using the "meter" method without removing the main chassis from the cabinet.

This can be accomplished by removing either the first or second Video IF tube V201 or V202, and inserting a sharp pointed test prod into pin #1 of the tube socket involved. (Remember that when viewing the tube socket from the top, the pins are counted in a counter-clockwise direction). Once the meter connection is made, the procedure is the same as outlined on page 22 of the Service Manual under the heading "Procedure for Adjustment in the Shop".

Breakdown of C113 in Inputuner

One of the most common troubles in the RA-103 and RA-105 Telesets has been the breakdown of the subject capacitor. The indication of this defect would be loss of picture and sound. In some cases, the breakdown would be incomplete resulting in very weak picture and sound.

The reason for this defect was traced to a particular manufacturers capaciter which is no longer being used. For the past few months all Telesets manufactured contain only the manufacturers capacitor found to be satisfactory. A ll field replacement capacitors issued from our Spare Parts Stores are the approved capacitors.

Any breakdowns of this capacitor in new Telesets or breakdowns of our replacement capacitors should be brought to our attention.

RA-105, RA-106 PUSH PULL AUDIO AMPLIFIER

All RA-105 Colony Telesets beginning with serial #8,535,000 include a push pull audio amplifier chassis. This is used instead of the 6V6 audio amplifier stage used in previous models. This new amplifier has a rated output of 8 watts. Because of the increased power and high fidelity the speaker used with these Colony Telesets are different from the speaker previously used. The part number of this new assembly is #18002801. A schematic diagram for this amplifier with its associated parts list is available upon request.

The audio amplifier is connected to the main chassis through an interconnecting cable. The plug in this cable is inserted into the 6V6 audio output tube socket on the main chassis, as this stage is not used with the new amplifier. The B+ power for the 6SN7 is obtained from the main chassis. A self contained power supply is used to operate the 6V6 push pull tubes.

This new amplifier is also used in the RA-106 Manchu Teleset. However, in the Manchu the chassis is mounted in such a position that the tubes are horizontal. This necessitates the use of a 5W4 rectifier tube instead of 5Y3G to prevent the possibility of a plate to filament short.

Addition of Push Pull Audio Amplifier to Colony Telesets

The Colony Telesets that were manufactured before the new Push Pull Audio Amplifier was added may be modified very easily to include this new amplifier.

The parts necessary to make this change follow:

Item	Part Number	Cost to Dealers and Service Org.
Audio Amplifier	89001401	$25.00
Speaker Assembly	18002801	8.10

Procedure For Making Modifications

1. Replace the old speaker with the new speaker assembly #18002801. This speaker is rated at 8 watts compared to the 3 watt rating of the old speaker. In addition, the new speaker is a higher fidelity unit.

2. Remove the main chassis and connect pin #1 of V216 (6V6 Audio output) to ground.

3. Replace the main chassis and remove V216. (This tube is not used with the added amplifier).

4. Plug the cable from the audio amplifier into the socket formerly occupied by V216.

5. The amplifier may be placed on the bottom of the cabinet at the rear of the speaker.

DEFECTIVE VERTICAL BLOCKING OSCILLATOR TRANSFORMERS

Important

As a result of numerous reports from the field, we have found it desirable to impregnate the vertical blocking oscillator transformer to prevent failure of this component usually caused by very humid weather. The opening of the primary results in loss of vertical synch.

The impregnated transformers, readily identified by a black wax coating on the outside, should be used whenever it becomes necessary to make a replacement.

We will accept for credit any unused unimpregnated vertical blocking oscillator transformers. Impregnated transformers may be purchased from our Spare Parts Department.

RA-105B and RA-108A Section

The section that follows contains information pertinent to the service of RA-105B and RA-108A Telesets.

It is felt that there is enough difference between the RA-105B and RA-105A models to warrant a separate section.

Index RA-105b Section

DU MONT MODEL RA-108A TELESET

The RA-108A television receiver is an outgrowth of the RA-105A and the RA-106A models which have proven so successful in the field.

Basically the main chassis is very similar to that of the standard RA-105A and the RA-106A. The power supply used with the RA-108A is similar to that used in the RA-106A models. On the pages that follow, a detailed comparison will be made between these chassis and the circuit differences will be listed.

The first cabinet model of this Teleset is called the "Bradford". This model has doors that resemble the doors on the Westbury. The first sets shipped will be dark mahogany.

The Bradford contains a main chassis, power supply chassis, 19" metal cone tube, and a 45 RPM record changer. No AM Tuner is used with this model.

On the RA-108A as well as the other new models, the tube is so masked that the entire width of the tube is visible. The top and bottom is masked so that the aspect ratio of 4:3 is maintained.

One of the outstanding features of this television set is the use of a metal cone 19" television tube. This tube, identified as a 19AP4, is approximately 7" shorter than the 20BP4. With the shorter tube length, the deflection angel is approximately 66° as compared with the deflection angle of 54° which is used in the 20BP4.

The serviceman should be very careful when using this tube as the entire metal cone is at the high accelerating potential which is approximately 13,000 volts. There is no specific point on the metal cone where the high voltage connection has to be made. However, on this model the high voltage connection is made with a clamp on the rim of the tube. (This is at the front of the tube.)

You will note that the high voltage lead coming out of the power supply is apparently short. This length is adequate since an extension to the clamp on the tube plugs into the high voltage lead from the power supply.

To avoid the possibility of accidental contact with the metal cone, a protective cover fits glove-like over the metal cone. When replacing tubes, this cover should be placed over the new tube.

INSTALLATION AND HANDLING OF TYPE 19AP4 TELEVISION PICTURE TUBE

Anti-Corona Coating

An anti-corona coating has been placed on the glass funnel and neck to give satisfactory operation under conditions of high humidity. Avoid handling the tube by the neck and funnel. Moisture and salts from the hands will lessen the effectiveness of the coating If the coating becomes dirty or contaminated, wash with water or mild soap and water. Make sure that any soap is removed with a water rinse. Do not use chemical solvents or abrasives for cleaning.

Anti-glare Coating

The faceplate of the 19AP4 has been given an anti-glare coating to reduce reflection from the viewing surface of the tube under conditions of high ambient lighting. Observe the same precautions in handling that were described under anti-corona coating.

Ion Trap Adjustment

Make all initial ion trap adjustments at the lowest setting of the brightness control possible. The correct position for the ion trap magnet is shown in figure #1.

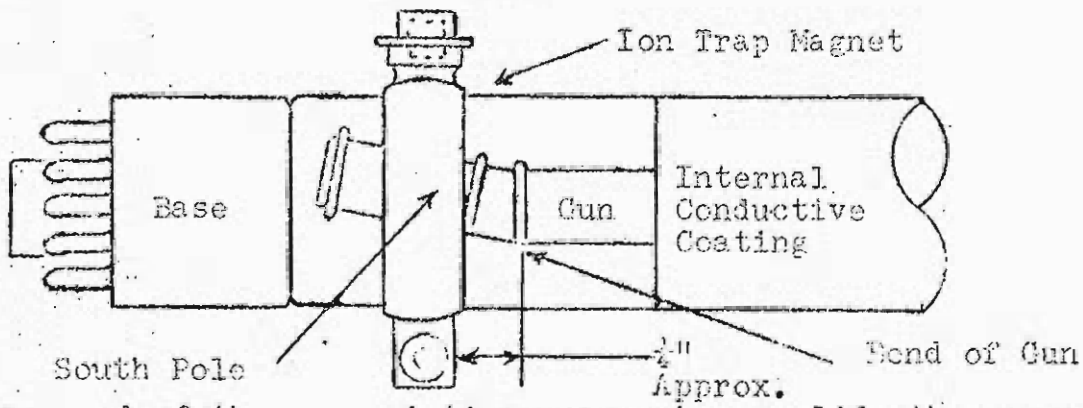

With the base end of the gun pointing up as shown, slide the magnet over the neck. The north pole should be to the left adjacent to pin #12 and the south pole to the right adjacent to pin #6. The magnet should be placed about ¼" in back of the bend in the gun for the first adjustment.

Rotate the ion trap magnet about an eighth of a turn each way and slide it back and forth along the neck stopping at the point of maximum brightness. Keep reducing the brightness as the system is brought into line to avoid damage to the tube. After alignment at low brightness, make a final adjustment with the brightness control set to where the raster just starts to "bloom". At this point, the raster begins to expand in size rapidly.

If no raster appears and all other conditions are normal, it is possible that the magnet polarity is reversed. Rotate the magnet through half a turn around the neck. Then make adjustments as before. If there is still no raster, try another magnet before looking for other sources of trouble.

Do not leave the tube on any longer than necessary when making preliminary adjustments. If the beam of electrons is operated at high intensity before being brought into line with the ion trap magnet, it may damage the internal structure of the tube. For the same reason, it is important that the final adjustment of the magnet is made for maximum screen brightness. Failure to do this may result in burning the limiting aperture or the release of gas into the tube.

Focus Coil and Deflection Yoke Adjustment

The focus coil and deflection yoke should be carefully aligned so that the raster covers the screen properly. Do not use the ion trap magnet to get screen coverage. It should be used only to obtain maximum pattern brightness.

Focus

The sets are to be shipped with the yoke and focus coil assembly removed. Therefore, proper focus depends upon the careful adjustment of the focus coil.

To get the best focus, the deflection yoke should be pushed all the way to the front and the focus coil should be pulled back as far as necessary to obtain the best focus.

IMPORTANT ADDITION TO ABOVE PROCEDURE

Sometimes it will be found possible to get two brightness maximums when moving the ion trap magnet back and forth along the neck. The correct position to use is closer to the base of the tube. The second maximum is usually found when the magnet is close to the case of the focus coil. The magnetic shunting effect of the focus coil case on the ion trap magnet changes the field strength so that a brightness maximum is obtained in this incorrect location. Tubes should not be operated at the second maximum since spot centering is disturbed and there is a possibility of tube damage.

DIFFERENCES BETWEEN THE RA-108A MAIN CHASSIS AND THE RA-105A MAIN CHASSIS

The essential differences between the main chassis used in the RA-108A and the main chassis used in the RA-105A are listed below:

The power transformer used on this chassis is self-regulating. It was made by Sola Electric especially for our use. The can that protrudes on the side of the chassis is a 1.5 mfd capacitor identified on the schematic as C302. This capacitor is used in conjunction with the regulator transformer.

The use of this regulating transformer will make our Telesets using this chassis immune from line bops and flicker. The DC output voltage remains constant within ± 2% with AC line voltage variation of ± 10%. This means that in most cases the size and position adjustments will not have to be made when the set is installed.

A 20.4 mc trap is included in this chassis. This trap was also put in the later RA-105A Telesets. This trap is used to reduce the interference from the video carrier on adjacent channels. The interference would, of course come from the higher channel.

This circuit is located at the input to the 6AL5 and consists of the series parallel combination of C300, C301 and L221.

One half of V204 is no longer used. This is due to the use of a different type of AGC. As will be pointed out later, the AGC comes free with the new synch circuits.

The 1st video amplifier has been changed from a 6AG5 to a 6BA6. This necessitated certain changes in the circuit constants which are obvious from examination of the circuit diagram.

Note that the sync is no longer taken off at the output of the 1st video amplifier. The sync takeoff point is now at the input to the 6AL5 video detector.

The third video amplifier has been changed from 6K6GT to a 6V6GT/G. This will provide greater video gain.

Notice also that the output of the cathode follower V206A is direct coupled to the third video amplifier.

The method of sync amplification and detection used in this model performs very satisfactorily. Note that a lead from pin #1 of V204 is fed to the 6AU6 (V225). The purpose of this stage is to amplify the signal and couple it through the transformer Z206 to the sync and AGC detector V226. This amplifier is narrow band and the transformer is tuned to 26.4 mc.

One half of V226 the 6AL5 is used to detect the signal and feed it to V217 the sync clipper where the sync is clipped and then fed to the horizontal and vertical circuits.

The other half of the 6AL5, V226 (pins #2 and 5) is used to detect the signal and use it for AGC. The greater the amplitude of the sync, the more the tube will conduct. The amount it conducts of course, depends upon the setting of the AGC control R350.

When the tube conducts, the AGC voltage is developed by current flowing through R361. Because of the filtering action of C308, R362, C303, R246, C226, R245 and C227, the voltage fed back to the mixer and 1st and 2nd video IF stages is effectively D.C.

As in the RA-105A, when FM is used, the gain of the mixer and 1st video IF stage is controlled by the AVC voltage from the sound limiter stage.

AGC ADJUSTMENT

In order to set the AGC voltage in the field it is necessary to use a signal generator so that the receiver input can be specified. It is also important that the signal generator and receiver be tuned to a frequency that will give a video IF frequency of exactly 26.4 mc.

In order to eliminate frequency errors in setting the signal generator, the beat frequency method should be used; that is, beat the signal generator frequency with the video carrier frequency (see Table 1) of a tele-station. This can be accomplished by using the following procedure:

1. Connect an antenna to the receiver input in the normal manner, then connect the output terminals of a VHF signal generator directly across the receiver input. i.e. in parallel with the antenna.

2. Connect a vacuum tube voltmeter (VTVM) to J209 (Jack on top of main chassis) and set to read negative voltage on the 5 volt scale.

3. With the receiver operating normally, tune in a tele-station, preferably a low frequency station. Adjust the output of the signal generator to approximately 2500 microvolts. Set the signal generator to the approximate frequency of the video carrier (see Table 1) of the tele-station to which the receiver is tuned. Tune the signal generator slowly through the region of the video carrier frequency; note the diagonal lines on the face of the picture tube that appear to rotate as the signal generator frequency is slowly changed. The point that corresponds

R715 in parallel with R727 in the grid circuit of V705 the damper tube, has been changed from 100K to 120K.

A size switch has been incorporated in this supply. This performs the same function as the switch on the RA-105 power supply.

In the 5V4G damper circuit, capacitors C716 and C714 instead of going to ground have been connected to the output of the negative voltage supply. This will permit the possibility of obtaining greater horizontal size.

The filament transformer T702 mounted on the power supply chassis is different than the T702 that was formerly used. It has two secondaries and the primary is connected thru the cabling to the primary of the transformer on the main chassis. This makes it unnecessary to use a separate AC cable.

The rating of fuse F701 has been increased to 6 amperes.

RA-105B TELESET

The RA-105B Teleset is now being produced in a single model known as the Sussex.

The main chassis used in this Teleset is the same as that used in the RA-108A.

The power supply chassis is very similar to that used in the RA-105A. The differences between the two power supplies are noted below.

This model uses the new 15DP4 cathode-ray tube. This tube makes use of a bent gun and of course, requires the use of a magnet. The method of adjustment of the ion trap magnet is the same as outlined in the information on the RA-108A. Incidentally, the same procedure should be used with the 12QP4. One item that should be pointed out is the fact that a different magnet is used on each tube. Therefore, the magnets should not be interchanged.

The tube in the RA-105B is masked in the same fashion as that in the RA-108A. This method of masking is also used in the RA-103D.

DIFFERENCE BETWEEN THE RA-105B POWER SUPPLY AND THE RA-105A POWER SUPPLY

The differences noted below are a result of comparing the RA-105A power supply diagram issued with the RA-105 service manual and the schematic for the RA-105B power supply.

In the negative supply filter, C411A and C411B have been changed from 70 mfd 175V to 50 mfd 250V. This increase in voltage rating was made to satisfy the underwriters requirements. An additional 50 mfd capacitor C416 was added to reduce the hum.

R415 the series dropping resistor was changed from 250 ohms 5W to 600 ohms 20W.

Resistor R416 was removed from the cathode circuit of V401B, changed from a 6.8K to 18K and connected between the plate-grid circuit of the 12AU7 and pin #1 of J402.

The cathode of V401 (12AU7) is connected to pin #9 and then to the plates of the 6X4's. This circuit change will prevent the relay from chattering when the set is first turned on.

The 10 ohm resister R417 in the filament circuit of the 12AU7 has been removed from ground. Both sides of the filament in this tube are now connected to the secondary of the filament transformer T402.

This T402 is an addition to this chassis as it was not used on the RA-105A power supply.

C409 and C408, the two capacitors in the power feedback circuit from the 5V4 are removed from ground and returned to the output of the negative voltage supply.

Note also that the circuit arrangement for the horizontal size switching circuit has been changed.

WIDE ANGLE YOKE FOR 19AP4

When replacing the deflection yoke in either of the RA-108A models, part #21004971 should be used as the replacement.

This yoke has been designed especially for the 19AP4 cathode-ray tubes. The main advantage to be derived from the use of this yoke is that the problem of neck cut-off (shadows in the sides or corners) has been eliminated.

INPUTUNERS

Three different Inputuners have been used in the RA-105B and RA-108A Telesets.

Two of these tuners use the "bottom-coupled" circuit but are physically different.

In the RA-103D, RA-104A, and RA-110A section, it was mentioned that the bottom coupled tuner could be identified by the entry of the antenna cable into the front of the tuner.

The above statement applies to all bottom-coupled tuners except those used in the first 500 Bradfords. In these early RA-108A Telesets, the antenna lead enters the rear of the Inputuner chassis. The physical location of the tubes is the same as for the non-bottom-coupled tuner as used in the RA-105A Telesets. However, as with all bottom-coupled tuners, the oscillator tube is a 6AB4.

The third tuner mentioned above is the tuner that was used in the RA-105A Telesets and is not as sensitive as the bottom-coupled tuner.

To sum up the Inputuner situation, it can be stated that:

1. All RA-108A Telesets (Bradfords and Mansfields) contain bottom-coupled Inputuners.

2. All RA-105B Telesets (Sussex) do not contain bottom-coupled Inputuners.

3. Before installing a RA-105B in a fringe area, examine the Inputuner to be sure it is of the "bottom-coupled variety".

TROUBLES IN THE RA-108A AND RA-105B TELESETS

One trouble that has been encountered in these Telesets that may be confusing to the serviceman is a condition wherein the filaments of the 5U4G rectifiers do not light. If a short on the secondary of the regulating transformer should develop this will cause the voltage of the 5U4G's which, incidentally, is also regulated, to drop very low, and thus give the appearance that the

5U4G's are not lit. If this should occur an investigation of the .05 capacitor connected from the cathode of the 5U4G should be made. Another possible cause of a short is the wire going to capacitor C302 which is located on the side of the main chassis. If replacement of this capacitor or transformer becomes necessary, not only should the part number be specified in obtaining a replacement, but the color dot on the transformer and, or, capacitor should be indicated. There are three different colors used, red, yellow and white. Thus a condenser with a red dot should be used with a transformer having a red dot.

Local-Distance Switch

This switch is used on the RA-105B and RA-108A Telesets as well as the RA-103D series.

However, the effect of this switch will not be as noticeable on these Telesets as on the RA-103D line because the AGC circuit will tend to counteract any change that takes place in signal level in the IF strip. Nevertheless, in very weak signal areas where the amplitude of the signal is too low to affect the AGC a noticeable increase will result from using the L-D switch.

ERRATA SHEET

Main Chassis Schematic Diagram for Teleset Models RA-105B and RA-108A.

Several errors in the subject schematic recently issued to the field have been brought to our attention. The corrections for these errors follow:

1. The Local-Distance switch connections should be as shown in the following diagram:

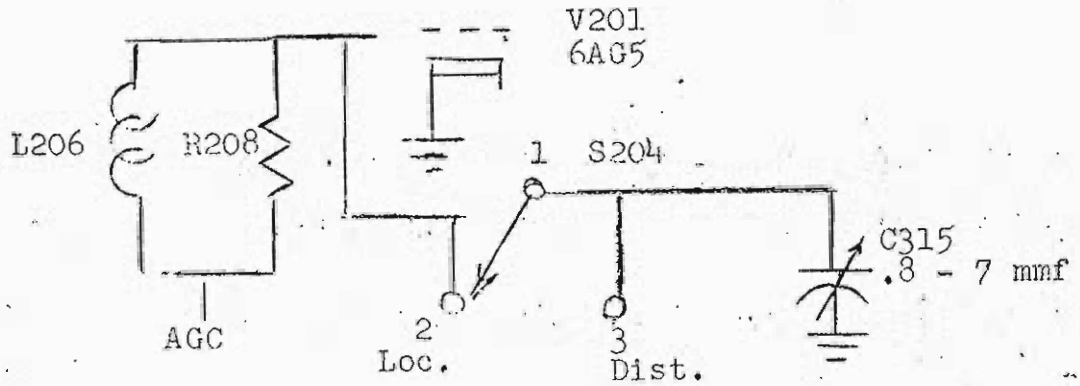

2. L221 (the 20.4 mc trap) in the cathode circuit of V204 should be shown as an adjustable coil.

3. R222, the screen dropping resistor of V205, should be shown as 1W.

4. R227, the plate dropping resistor of V206-A should be shown as 1W.

5. C221, the coupling condenser between the plate of V207 and the control grid of the CRT, should be shown as 0.1.

6. Terminal #3 of R281 (the tone control) shown connected to ground, should be connected to the junction of R277 and C252 in the volume control circuit.

7. Pin #1 of V218 should be a cathode; pin #7 of V218 should be a plate.

8. The capacitor connected between pin #2 and pin #7 should be identified as follows:
   C267 .01 300V ± 5%

9. The tolerances of C279 and C280 should be shown as ± 20%.

Flyback Power Supply Schematic Diagram for RA-105B.

Please make the following corrections on your copy of the subject schematic:

1. C404 should be marked + at the side connected to pin #3 of V402, and - at the other side.

2. C416 should be marked + at the ground side and - at the top side.

Flyback Power Supply Schematic Diagram for RA-108A.

Please make the following corrections on your copy of the subject schematic:

1. C705 should be marked + at the side connected to pin #3 of V702.

RA-108A
Production Changes

Bradford Record Changer

The record changer originally used in the Bradford Teleset was the 45 RPM changer. The record changer used in the Bradford Telesets currently being produced is a dual speed changer designed to operate at 33 1/3 RPM or 45 RPM.

The letter A is plainly stamped on the outside of the carton containing the Bradford Teleset with the dual speed changer.

Add the following items to the Miscellaneous Parts List, Bradford only, on the rear of the Main Chassis schematic diagram for Teleset Models RA-105B and RA-108A.

Part Number	Description
19034521	Reproducer, Sound 45/33 RPM (Record changer)
64002381	Button, plug

A box of 10 adapters to permit the playing of the RCA type record (large center hole) on this player is included with each Bradford Teleset. These adapters are a disc like affair that fit into the center hole of the RCA 45 RPM records. The part number of these adapters is 19034550 and are referred to in the operating handbook on the Bradford Teleset as "RS-46 adapters".

Power Supply

The following circuit change has been made since the schematic diagram for the RA-108A power supply was issued.

The size selector switch (S701), the horizontal size inductor and circuit were changed as shown in the following sketch:

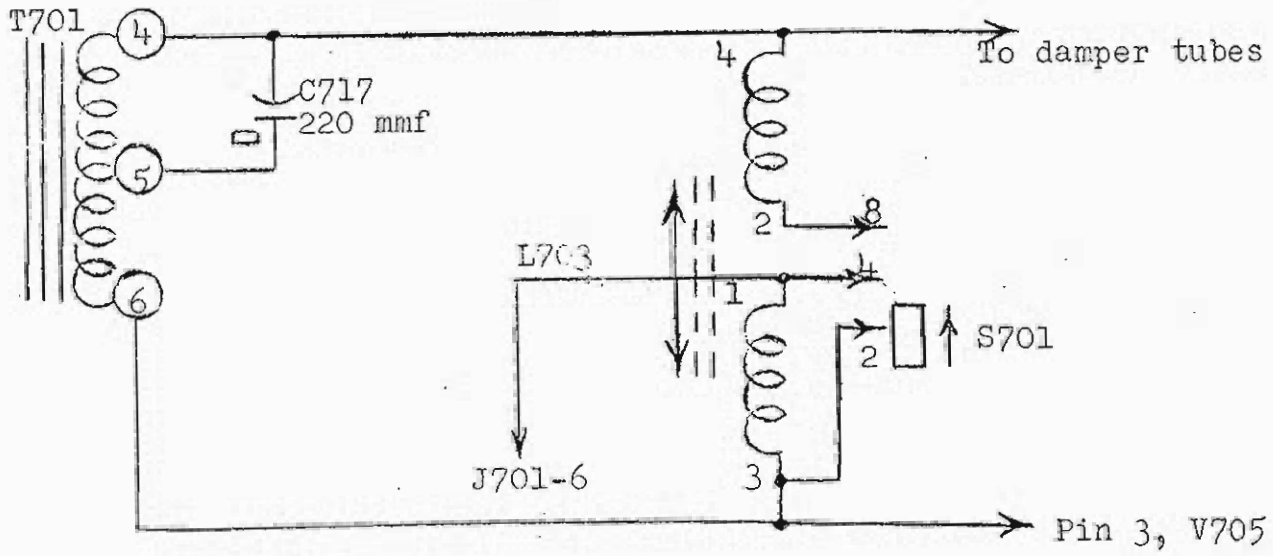

In this new circuit, please note that L704, part #21004763 is no longer used. The description and part numbers of the new parts follow:

Symbol	Part Number	Description
S701	05003681	Switch 3 positions
L703	21005021	Inductor, horizontal size

Purpose of Change:

The change was made in order to reduce excessive temperatures in the horizontal deflection transformer T701.

The size control operation with this new circuit is as follows:

1. Maximum picture size is obtained with the size control switch S701 turned to the middle position. (Connecting points #2 and 4 together.)

2. When the size control switch is turned counter-clockwise (CCW), (the position shown on the schematic) the series coil (lower coil on schematic) is in the circuit and smaller size will be obtained with the size coil slug turned out of the coil form.

3. Both the series and shunt coils are in the circuit when the switch is turned to the clockwise position. This will connect points 4 and 8 together. In this position and with the size coil slug turned out of the coil form, absolute minimum size is obtained.

Identification of Chassis Containing This Change

A large number "2" stamped on the rear of the power supply identifies it as containing this change.

"Hook" in Bradford, Mansfield and Sussex Telesets

On some of the above mentioned models, the top portion of the picture leans over usually from right to left. This condition is referred to as a "hook".

To eliminate this "hook", it is necessary to change the value of C263 (located in the grid circuit of the sync clipper V217) from .01 mfd to .1 mfd.

The elimination of the "hook" by this change will make the set much less immune to noise. That is, heavy ignition will cause the set to lose sync (both horizontal and vertical) whereas under the same heavy ignition noise, without the change, the set will not lose sync.

Obviously, this change should not be applied to any set located in a very noisy area as the loss of the sync is more annoying than the "hook". In some cases it may be possible to eliminate the hook by using a .05 mfd in place of the .01. The loss of noise immunity will be less with a .05 than with a .1 mfd.

In the near future, the Telesets will contain both condensers but with the .01 actually in the circuit. One side of each condenser will be brought out to a pin. Insertion of a jumper across these pins on top of the chassis will enable the serviceman to parallel the .1 with the .01 to eliminate the hook.

Notice

The modification indicated above to eliminate the "hook" has been incorporated in the current production Telesets.

All RA-108A Telesets beginning with serial number 086458 have the modification. These chassis are identified by a large letter "C" stamped on the rear.

The additional capacitor is to be identified with the symbol C218, part number 03014040.

IMPORTANT

The change to eliminate the "hook" should not be made in a noisy area as the noise immunity is decreased by this change.

ALLEN B. DU MONT LABORATORIES, INC.
Teleset Service Control Department

Service Literature Price List — June 1, 1952

	Dealer Price
Hard Cover Binder (Binder Only)	$4.00
Hard Cover Service Binder - containing the following sections: RA-109A RA-111A, RA-112A, RA-113, RA-120A — Tarrytown RC Manual RA-117A — Sherbrooke RC Manual RA-130A RA-147A RA-160, RA-162	6.30
Hard Cover Service Binder - containing Service Information on all Du Mont Telesets	10.50
Paper Cover Service Binder - containing the following sections: RA-109A RA-111A, RA-112A, RA-113, RA-120A — Tarrytown RC Manual RA-117A — Sherbrooke RC Manual RA-130A RA-147A RA-160, RA-162	4.30
Paper Cover Service Binder - containing Service Information on all Du Mont Telesets.	8.50

- -

Service information on individual Telesets may be purchased separately at prices shown below. Any of the Service Sheets listed below may be purchased separately for 15 cents each. Service Sheets are 19" by 24" sheets covering the information indicated by their titles. When ordering Service Sheets separately, specify the exact title of the sheet desired. EX: RA-105B Power Supply Schematic Diagram or RA-109A Alignment Procedure.

RA-103C
Service Notes with the following Service Sheets:
1. Savoy & Winthrop AM Tuner Schematic & Alignment
2. Schematic Diagram 50

RA-103D, RA-104A, RA-110A
Service Notes with the following Service Sheets:
1. Schematic Diagram
2. RA-104A (Wellington) AM Tuner Schematic & Alignment
3. Alignment Procedure 65

RA-105A, RA-106A
Service Notes with the following Service Sheets:
1. Main Chassis Schematic (first 1000 units)
2. Main Chassis Schematic (later models)
3. RF Tuner Schematic
4. RA-105A Power Supply Schematic
5. RA-106A Power Supply Schematic
6. AM Tuner Schematic (Colony)
7. Tube Location Chart
8. Block Diagram 40

*Bracketed schematics are sold as complete set at 25 cents

Service Literature Price List

June 1, 1952
Dealer Price

RA-105B, RA-108A
Service Notes with the following Service Sheets:
1. Main Chassis Schematic Diagram
2. Power Supply Schematic Diagram
3. Alignment Procedure 65

RA-109A
Service Notes with the folloing Service Sheets:
1. Schematic Diagram
2. Block Diagram
3. Alignment Procedure (covers RA-109A, RA-109A FAS, RA-116A, RA-119A, RA-130A, RA-133A). 70

RA-109A Fringe Area
1. Schematic Diagram 15
(Note: For alignment information, use RA-109A Alignment Procedure available separately for 15 cents)

RA-111A, RA-112A, RA-113, RA-120A
Service Notes with the following Service Sheets:
1. RA-111A Schematic Diagram
2. RA-112A, RA-113 Schematic Diagram
3. Alignment Procedure (RA-111A, RA-112A, RA-113, RA-120A)
4. Block Diagram (RA-111A, RA-112A, RA-113, RA-120A)
**5. RA-113 Tarrytown AM Tuner Schematic & Alignment
**6. RA-120A Tarrytown AM Tuner & Audio Amp. Schematic. 1.25

RA-112A Fringe Area
1. Schematic Diagram 15

RA-116A
Service Notes with the following Service Sheets:
1. Interconnection & Audio Amplifier Diagrams
2. Recorder Amp., & Recorder Amp. Power Supply & Phono Amp. Diagrams
3. Main Chassis Schematic (RA-109A)
4. Recorder Unit Manual 80
(Note: For alignment information, use RA-109A Alignment Procedure available separately for 15 cents)

RA-117A
Service Notes with the following Service Sheet:
1. Schematic Diagram 30

RA-119A
Service Notes with the following Service Sheets:
1. Power Supply Schematic Diagram
2. Main Chassis Schematic Diagram (RA-109A) 55
(Note: For alignment information, use RA-109A Alignment Procedure available separately for 15 cents)

**Shows only AM Tuner and Audio Amplifier Schematics. Use RA-112A RA-113 Schematic Diagram Sheet for Main Chassis.

/Same as RA-109A Schematic Diagram.

Service Literature Price List

June 1, 1952
Dealer Price

RA-130A
1. Schematic Diagram 15
(Note: For alignment information, use RA-109A Alignment Procedure, available separately for 15 cents.)

RA-147A
1. Schematic Diagram 15

RA-160, RA-162
Service Manual with the following Service Sheets
1. Signal Chassis Schematic Diagram
2. Sweep Chassis Schematic Diagram
3. Alignment and Adjustment Procedure 1.00

Record Changer Manuals
1. RA-104A, Wellington
2. RA-108A, Bradford
3. RA-109A Sherbrooke
4. RA-113, Tarrytown . . . . . .25 ea.

Service News (Monthly Publication)
Back copies for 1951 . . . . . 1.00

Service Literature Subscription - 1952
Service News, plus new literature 2.00