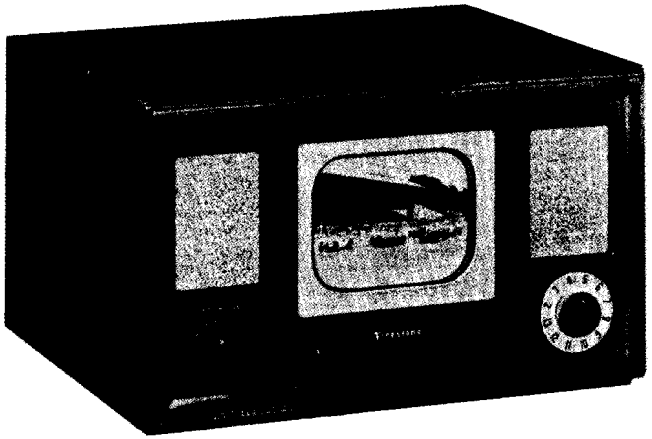

SOUND I.F. — 32.8 MEGACYCLES PICTURE I.F. — 37.3 MEGACYCLES

Power Consumption
100 Watts

Power Output (Audio) —
.5 Watts undistorted

Input Impedance
72 ohms unbalanced

Picture Tube Size
7 inch

Power Supply 105 to
125V 60 Cycle AC

Speaker
1 oz. P.M. — 4"
— Voice Coil 3 Ohms

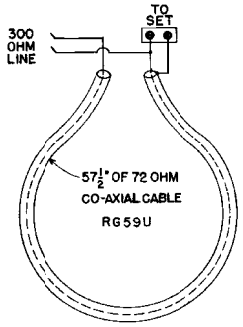

ANTENNA MATCHING TRANSFORMER

FIG. 2

TUBE COMPLEMENT

No.	Tube	Symbol	Function
1	6J6	V 21	R. F. Amplifier
2	6AG5	V 20	Converter
3	6J6	V 19	Oscillator
4	6AU6	V 5	1st. IF Amplifier
5	6AU6	V 6	2nd IF Amplifier
6	6AU6	V 7	3rd IF Amplifier
7	6AL5	V 8	Video Detector & AGC
8	6AU6	V 9	Video Amplifier
9	6AU6	V 1	4.5 mc Amplifier
10	6AL5	V 2	Ratio Detector
11	6AT6	V 3	Audio Amplifier
12	25L6	V 4	Audio Output
13	6AU6	V 10	Sync. Separator & D.C. Restorer
14	6AL5	V 16	A.F.C. Discriminator
15	12SN7	V 11	Horizontal Oscillator & AFC Amplifier
16	12SN7	V 12	Horizontal Deflection Amp.
17	12SN7	V 13	Vertical Oscillator
18	6SL7	V 14	Vertical Deflection Amplifier
19	12SN7	V 17	H.V. — R.F. Oscillator
20	1B3	V 18	H.V. Rectifier
21	25Z5	V 15	Low Voltage Rectifier
22	7JP4	V 22	Picture Tube

Plus Selenium Rectifier and Ballast Tube

FREQUENCY CHART

CHANNEL	FREQUENCY	PICTURE FREQUENCY	SOUND FREQUENCY	RF OSCILLATOR FREQUENCY
2	54-60	55.25	59.75	92.55
3	60-66	61.25	65.75	98.55
4	66-72	67.25	71.75	104.55
5	76-82	77.25	81.75	114.55
6	82-88	83.25	87.75	120.55
7	174-180	175.25	179.75	212.55
8	180-186	181.25	185.75	218.55
9	186-192	187.25	191.75	224.55
10	192-198	193.25	197.75	230.55
11	198-204	199.25	203.75	236.55
12	204-210	205.25	209.75	242.55
13	210-216	211.25	215.75	248.55

INSTALLATION

WARNING

This receiver is designed for use on 105 to 125 Volt 60 cycle AC only. Do not connect to Direct Current (DC) power supply. If in doubt, check your local power supply company.

GENERAL—For best results this Firestone receiver should be installed by a competent television serviceman who is properly equipped to make necessary adjustments to the receiver and determine the most suitable type of antenna installation.

OUTDOOR ANTENNA—To insure good results, we recommend the use of Firestone outdoor antennas. These antennas will provide unusually fine reception of both high band and low band channels.

In areas where both high band and low band reception is available, these antennas may be used in the form of a stacked array.

Where a stacked array is used, it may prove advantageous in some locations to connect separate down leads from each antenna and connect a suitable switch at the receiver as shown in figure 1.

INDOOR ANTENNA—Indoor antennas, although acceptable in many cases, are subject to many disturbing factors. For example; viewers approaching the antenna, electrical appliances within the home, defective lighting fixtures, etc., all of which will affect the receiver where an indoor antenna is used and would probably be eliminated with an outdoor installation. However, in cases where an indoor antenna is acceptable, or becomes a necessity because of local restrictions, etc., we recommend the Firestone indoor antenna.

TRANSMISSION LINE—In non-critical locations, satisfactory results may be obtained with a 300 ohm down lead connected directly to the receiver antenna terminals. In more critical locations (insufficient signal) increased pick-up may be obtained by using the 300 ohm down lead in conjunction with a suitable matching transformer at the receiver. (See figure 2). In unusually noisy locations considerably improved performance may be obtained by the use of 72 ohm co-axial transmission line.

NOTE:—When using 72 ohm co-axial down lead, it is important that its outer lead be connected to the shield side of the receiver transmission line. Check antenna terminal connections to determine shield side.

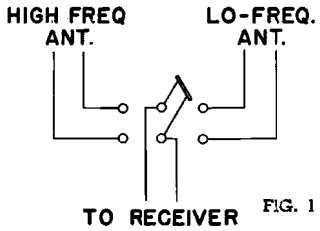

FIG. 1

www.rcscjr.com

©John F. Rider

CONTROL FUNCTIONS

RECEIVER FRONT PANEL CONTROLS

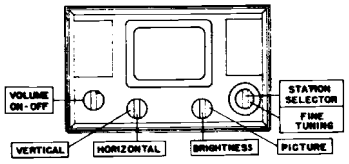

FIG. 3

VOLUME — ON-OFF

The volume control is an audio control only and has no effect on the picture. It is connected in the grid circuit of the audio amplifier (V-3). The power on and off switch is combined with the volume control.

HORIZONTAL HOLD —

The Horizontal Sweep Oscillator uses Automatic Frequency control. As a result the Horizontal Hold Control will only be used if the picture should resolve into a series of heavy, oblique, black and white lines. A fast twist of the knob will then cause the picture to correct itself. In some outlying districts where a different power source is used than that used by the transmitter, it might be necessary to rotate the control to a full counter-clockwise position, and then return slowly to a point where the picture becomes stable.

VERTICAL HOLD —

The vertical hold control is not a critical control. It requires no fine adjustment to keep the picture properly framed. This control is in the grid circuit of the 2nd half of the vertical oscillator (V13).

PICTURE —

Controls video gain through the video amplifier cathode (V9). It should be remembered that this receiver uses AGC and therefore will rarely overload despite contrast setting.

BRIGHTNESS —

This control operates by varying the DC potential on the cathode of the Kinescope (V22).

STATION SELECTOR —

The (inner) bar knob of this control will operate the station selector. The (outer) circular knob will activate the Fine Tuning control, a corrector for the R.F. Oscillator.

WIDTH —

Operates in the plate circuit of the Horizontal Sweep Oscillator (VII) by varying B plus to the tube. This control varies the Amplitude of the Horizontal Sweep Voltage and should be used in conjunction with the High Voltage Adjustment.

HEIGHT —

Operates in the plate circuit of the Vertical Sweep Oscillator (V13) in much the same manner as the width Control and should be used with the High Voltage Adjustment.

FOCUS —

The electrical function of this control is to vary the voltage on the first Anode of the Cathode Ray Tube.

HORIZONTAL AND VERTICAL CENTERING —

These controls vary the potential on the Deflection Plates of the Cathode Ray Tube thereby altering the position on the raster on the face of the Picture Tube.

HIGH VOLTAGE ADJUSTMENT —

This is a "screwdriver" adjustment. It is not necessary to use special screwdrivers (bakelite or plastic) to adjust this control. It will not "detune" nor is the trimmer above ground potential. It will increase or decrease the High Voltage applied to the Second Anode of the Cathode Ray Tube. An increase in High Voltage will make the picture smaller by accelerating the electron beam and thereby making it harder to deflect. When the adjustment is rotated in a clockwise direction, it will decrease the High Voltage.

BRIEF CIRCUIT ANALYSIS

The Firestone Television Receiver Stock No. 13-G-3 uses the Inter-Carrier system on Video and sound IF. In this system the picture and sound carriers are both sent through a single IF string and are separated AFTER the video detector (V8). The sound is taken off the plate of the Video Amplifier (V9) and fed through a 4.5 Megacycle Trap into a 4.5 Mc Amplifier (V1) and then through the Ratio Detector (V2).

TUNER—The tuner in this model covers 12 channels (2 to 13 inclusive) The local oscillator is tuned to the high side on all channels and is adjusted to provide a picture I.F. of 37.3 Mc and a sound I.F. of 32.8 Mc.

The tuning inductance for channel 2 is across the oscillator at all times. The tuning inductances for channels 3 to 13 respectively is shunted across the channel 2 inductance as these channels are selected.

In aligning the receiver channel 2 must first be adjusted and channel 3 to 13 then adjusted. Misalignment of channel 2 will detune the other channels. Appreciable readjustment of channel 2 may require retuning of several low frequency channels. This effect is of less importance on channels 7 to 13. Alignment should be attempted only after the receiver has been operating for 5 minutes.

R. F. AMPLIFIER — The antenna is fed between cathode and grid of the grounded grid RF amplifier (V21). The input circuit of which is untuned. Double tuned interstage coupling is used between the plate of the RF Amplifier (V21) and the grid of the mixer (V20). Mechanically, the series inductances used take the form of several individual coils which are cut in or out of their respective circuits by means of the band switch. These coils will rarely need readjustment.

MIXER—The output of the RF Amplifier (V21) and the Local Oscillator are condenser fed into the Control Grid of the Mixer Stage (V20). This circuit is tuned in much the same manner as the output of the RF Amplifier, previously described.

OSCILLATOR—The RF Oscillator (V19) is fairly straightforward in operation. Its main peculiarity is that the coil for Channel 2 is permanently parallel to all other Oscillator coils from 3 to 13. It is therefore necessary, when aligning the oscillators to ALIGN CHANNEL 2 FIRST and the rest of the coils in any order thereafter. They are tuned by brass slugs accessible through two slots in the front of the receiver chassis. Channel 2 is found at the top of the right hand slot and the others follow in regular order in a clockwise direction finishing with channel 13 at the top of the left hand slot.

VIDEO IF—Each Video IF transformer has only one adjustment, a powdered iron slug accessible from the top of the chassis. The Video IF String is stagger tuned to two frequencies. The first and third IF transformers are tuned to 34.8 Megacycles and the second and fourth are tuned to 36.9 Megacycles. The response curve is fairly flat topped and should produce a picture with good definition.

VIDEO AMPLIFIER—The output of the Video amplifier is fed to three separate circuits. It is here that the separation of picture and sound takes place. It supplies (1) The cathode ray tube with picture intelligence and blanking (2) the grid of the synch separator with the incoming synch pulses and (3) the 4.5 MC Trap with the sound carrier.

SYNCH SEPARATOR AND DC RESTORER—The synch pulses fed from the Plate of Video Amplifier (V9) to the grid of the synch Separator (V10) are taken off the plate of the Synch Separator at which point they are of negative polarity. There is a sufficient amount of limiting action to remove whatever static interference may ride in on the pulses. DC restoration voltage is developed across the Cathode resistor (R48) and fed to the Control grid of the Cathode Ray Tube.

HORIZONTAL SWEEP CIRCUITS—The Horizontal Sweep oscillator incorporates an Automatic Frequency Control of the discriminator type. The sync pulses as taken from the Sync Separator (V-10) and the separation network are fed into the AFC section of the tube (V-11). With this constant frequency as a reference any variation in the Horizontal Oscillator frequency results in a DC voltage at the output of the AFC discriminator (V-16) which is subsequently amplified through the AFC amplifier section of V-11. This voltage is of such polarity as to counteract the original horizontal oscillator frequency drift when applied to the grid of the blocking oscillator. The front panel Horizontal Hold Control will serve to amplify the AFC action in cases where the frequency difference is too great for these circuits to overcome automatically.

VERTICAL SWEEP CIRCUITS—This oscillator is of the Multi-Vibrator type using a 12SN7 tube (V-13). Both Horizontal and Vertical Centering is accomplished by varying the DC voltage on one of the deflection plates while maintaining a constant DC potential on the opposing plate.

SOUND SYSTEM—The sound Carrier is taken off the plate of the Video Amplifier (V-9) by a 4.5 Megacycle trap and fed through a 4.5 MC Amplifier (V-1) to the Ratio Detector (V-2) and then to the audio amplifier (V-3) audio output (V-11) and speaker.

HIGH VOLTAGE POWER SUPPLY—The High Voltage Power Supply is of the RF type. The Oscillator is free running and independent of other circuits in the set. It is NOT a fly-back power supply. The Oscillator is essentially a tuned plate circuit fed through a typical rectification and filter network. The oscillator is a 12SN7 (V-17) and the rectifier is a 1B3/8016 (V-18).

A G C—The receiver uses an automatic gain control circuit operating on the first two IF stages, which is effective in maintaining the signal level at the video detector (V-8) reasonably constant. The manual contrast control provides a means of further contrast variation by controlling the gain of the video amplifier (V-9).

GENERAL—The filaments (with the exception of the High voltage rectifier) are hooked up in three series banks. Two of the filament banks (including their respective Ballast resistors) are hooked in parallel to one another and both are in series with the third bank. Therefore, an open filament circuit in either of the parallel banks will be apparent by loss of filament power only to tubes in that bank. However, an open filament in the series bank will result in loss of filament power to all tubes.

The B power is supplied by two half-wave rectifiers

The positive voltage is derived from a selenium rectifier and the negative voltage from a 25Z6 connected in parallel.

The sum of the voltages approximately 230V, is used as the B plus supply for the Video amplifier (V-9), Horizontal Deflection circuits (V-11 & V-12) and H.V. oscillator (V-17).

ALIGNMENT PROCEDURE

PRECAUTIONS—Do not remove any tube before first disconnecting the receiver from the power line as damage to other tubes may result. On this model the chassis is returned to one side of line. Care should be taken to avoid grounding receiver. As the antenna terminals are isolated from chassis no damage will result if the antenna is accidentally grounded. Where severe line noise is encountered reversing the AC plug may be advantageous.

The alignment of this Receiver can be broken down into three basic parts.

1 — Video IF Alignment 2 — RF Alignment
3 — Sound Alignment

TEST EQUIPMENT REQUIRED

CATHODE RAY OSCILLOSCOPE—The tube size is relatively unimportant, however, anything under 5" usually makes fine adjustment quite difficult.

SWEEP GENERATOR—The sweep generator used should have linear coverage of a center range from 30 to 220 megacycles. The output should be fairly flat over wide frequency variation of the sweep. It should be capable of an output of about 0.1 volt with attenuation. It is preferable that the generator have a deflection output for the test oscilloscope.

AM SIGNAL GENERATOR—This generator should have a frequency range of from 4.5 to 220 megacycles. As this generator is used occasionally as a market generator, accuracy is an important factor. It should be capable of 0.1 volt output with attenuation and should be linear through the range.

VACUUM TUBE VOLTMETER — Almost any standard make VTVM will do. It should preferably have a reversible polarity switch.

1. VIDEO IF ALIGNMENT

An adequate signal can be fed through the video IF string by feeding the output of the sweep generator into a tube shield placed over the mixer tube (V-20). Care should be taken that this shield is NOT grounded. The ground side of the output can be connected to the grounded shield of the adjacent oscillator tube (V-19). This method will be found to be convenient and practicable, especially where a simple jig has been prepared.

The "hot" or "high" side of the Oscilloscope input should be connected to the junction point of the 8.2K detector load resistor (R36) and the peaking coil (L6). The "low" or ground side should be connected to the return side of R36. Care should be taken that the generator and the scope leads are well separated to avoid regeneration.

Adjust the first and third video IF transformers for the proper response on the lower or sound end of the curve and the second and fourth IF transformers for high frequency or picture response.

By substituting an AM generator for the sweep generator and a vacuum tube voltmeter for the oscilloscope, the receiver can be aligned by the spot frequency method. In this case, the signal is applied as above and the generator output is adjusted so that the response is about minus one volt D.C. as measured across the video detector load resistor (R36). With a 34.8 megacycle signal unmodulated fed in this manner the first and third video IF transformers should be aligned, and with a 36.9 megacycle signal the second and fourth video IF transformers should be adjusted for maximum deflection of the VT voltmeter. Adjust generator output so as not to exceed 5 volts across video detector load at anytime.

2. RF ALIGNMENT

In the alignment of the RF section three pieces of test equipment are necessary. A sweep generator, a signal generator and a cathode Ray Oscilloscope. For specifications see "Test Equipment" above.

The output of the Sweep Generator should be fed into the antenna. The signal generator (C.W.) should be loosely coupled to the antenna terminals. The AM signal generator is used as a marker as described below. Some Sweep generators made today contain their own marker oscillator. In cases where a generator of this type is used the AM Signal Generator may be eliminated. Oscilloscope is connected across R36 as described above.

The R.F. section of the receiver is tuned channel by channel. The proper frequency settings for any given channel can be determined by consulting the Frequency Chart on Page (2). For example in aligning channel 2 the sweep generator should be set to some mid frequency between 54 and 60 megacycles. This adjustment is not a fine one. After setting the sweeper in the general vicinity of the desired frequency it should be tuned to center the response curve on the Oscilloscope face. For picture and sound markers the signal generator should carefully be adjusted to the frequencies indicated in the Frequency Chart. For example in the case of channel 2 the picture marker frequency is 55.25 Mc. and the Sound-59.75 Mc.

It is important to note at this point that the oscillator coil for channel 2 is in parallel with every other oscillator coil from 3 to 13. It is therefore imperative that channel 2 be aligned first and the others in any desired order thereafter.

Starting with channel 2 and applying the proper frequencies as indicated above, the output of the sweep generator should be attenuated to the point where further attenuation will not affect the wave shape.

The Oscillator should then be adjusted to bring the sound carrier to a point approximately 20 db down on the response curve (see Fig. 7). With the oscillator so adjusted the picture carrier should fall at a point approximately 50% up on the slope of the opposite side of the band pass curve. Certain variations in the wave-shape and the location of the picture carrier are acceptable.

The picture carrier may vary in position from a point between 45% and 60% of the slope and the overall wave-shape may differ from the ideal, flat-topped response by being either slightly dipped or peaked in the center. See figure (7).

If the position of the picture carrier varies beyond the 45% to 60% points **on all channels** correction may be made by turning to channel 6, applying the proper input signals and slightly realigning the I.F. transformers.

NOTE: 1 — Care should be taken that the alignment tool used on the oscillator coil adjustments should be no larger than 3/16" diameter and be of the insulated type. Serious damage to the oscillator coils may result if this precaution is not observed.
2 — In order to avoid circuit overload, it is recommended, that the sweep amplitude be reduced to a point where the selectivity curve does not change appreciably with further reduction of the input voltage.

www.radiokit.com

©John F. Rider

3. SOUND ALIGNMENT

The sound alignment of this receiver is best done with an AM generator and a vacuum tube voltmeter. By feeding a 4.5 megacycle signal into the grid (pin 1) of the video amplifier (V-9) and placing the vacuum tube voltmeter at pin 7 of the ratio detector (V-2) the 4.5 megacycle trap and the primary of the ratio detector can be adjusted. In both cases the generator should be attenuated so that the reading on the voltmeter is between minus 3 and minus 4 volts, and both adjustments are for maximum deflection of the meter. The meter should then be connected to the junction of the .0015 condenser (C21) and the 47,000 ohm resistor (R14). The secondary should then be adjusted for a zero reading. The primary of the ratio detector transformer is found on the underside of the chassis, the secondary on top.

INDUCTANCES

PART NUMBER	SCHEMATIC	DESCRIPTION
TLF 120-1D	L 100-1	Chan. 2 Osc. Coil
TLF 120-2D	L 100-2	Chan. 3 Osc. Coil
TLF 120-3D	L 100-3	Chan. 4 Osc. Coil
TLF 120-4D	L 100-4	Chan. 5 Osc. Coil
TLF 120-5D	L 100-5	Chan. 6 Osc. Coil
TLF 120-6D	L 100-6	Chan. 7 Osc. Coil
TLF 120-7D	L 100-7	Chan. 8 Osc. Coil
TLF 120-8D	L 100-8	Chan. 9 Osc. Coil
TLF 120-9D	L 100-9	Chan. 10 Osc. Coil
TLF 120-10D	L 100-10	Chan. 11 Osc. Coil
TLF 120-10D	L 100-11	Chan. 12 Osc. Coil
TLF 120-10D	L 100-12	Chan. 13 Osc. Coil
TLF 147-D	L 100-27	1st IF Coil
TLF 147-D	L 3	2nd IF Coil
TLF 147-D	L 4	3rd IF Coil
TLF 151-D	L 5	4th IF Coil
TLF 143-D	L 100-21, 22	RF Coil
TLF 133-D	L 5	Video Peaking Coil (Wound on 33K Res.)
TLF 134-D	L 6	Video Peaking Coil
TLF 135-D	L-7	Video Peaking Coil (Wound on 22K Res.)
TLF 136-D	L-8	Video Peaking Coil (Wound on 15K Res.)
TLF 142-D	T-2	Ratio Detector Transformer
TLF 114-D	T-1	4.5 Megacycle Trap
TLF 144-D	L-1, 2	Filament Choke
TLF 506-1D	L-9	Choke
TTR 168-D	T-5	Hor. Blocking Osc. T'former
TTR 166-D	T-6	Hor. Deflection Transformer
TLF 137-D	T-7	High Voltage Osc. T'former

NOTE: Coils designated on the schematic as L 100—13, 14, 15, 16, 17, 18, 19, 20, 23, 24, 25 are not considered replaceable parts

HARDWARE

TKN 100D	Outside Knob	
TKN 101D	Inside Knob (Small Shaft)	
TKN 103D	Inside Knob (Large Shaft)	
TKN 108D	Inside Knob (Small Shaft—with Dot)	
TGL 100D	Safety Glass	
TMS 121D	Escutcheon	
TSG 106	Escutcheon Mounting Spring	
TGC 100	Grille Cloth	
TBF 150D	Picture Mask	
TSP 46B	Speaker (with output transformer)	
TSR 100	Selenium Rectifier—200 ma—5 plate	
TLD 101	Interlock Cord	
TPL 150	Interlock Plug	
TSO 104D	Picture Tube Socket (Wired)	
TTS 400D	Antenna Terminal Strip	

VIDEO IF RESPONSE CURVE

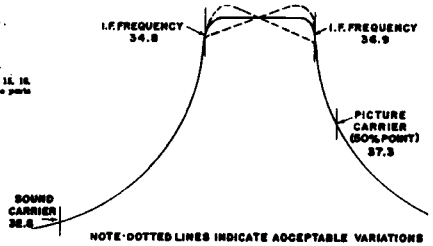

NOTE-DOTTED LINES INDICATE ACCEPTABLE VARIATIONS

FIG. 7

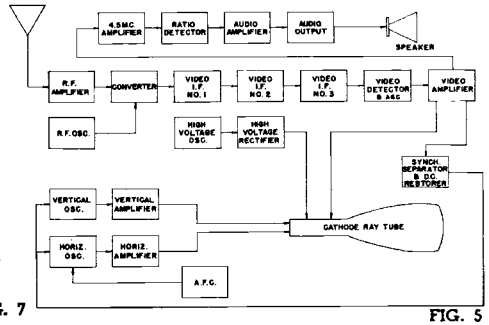

FIG. 5

CONDENSERS

PART NUMBER	SCHEMATIC	DESCRIPTION
		Electrolytics
TCE 100D	C57 A&B	125/200 mfd (dual) 150V
TCE 103D	C47	30 mfd 200V
TCE 104D	C18	4 mfd 25V
TCE 127D	C58	80 mfd 150V
TCE 128D	C26 A&B	80/80 mfd (dual) 150V
TCE 107D	C59	100 mfd 150V
		Paper Tubular
TCP 501-6K	C65, 66	.0005-6000V 20%
TCP 502-6K	C76, 77, 85, 86	.005 -6000V
TCP 502-10	C24, 78, 79, 72, 73	.005 -600V
TCP 202-10	C73, 74, 75	.002 -600V
TCP 503-4	C40, 44, 48	.05 -400V
TCP 503-10	C54	.05 -600V
TCP 203-4	C13, 15, 20, 25	.02 -400V
TCP 103-10	C67, 80, 23	.01 -600V
TCP 104-4	C69, 70, 81, 82	0.1 -400V
TCP 254-4	C43	0.25 -400V
TCP 254-1	C36	0.25 -200V
		Ceramic
TCC 010-11	C5, 9	1 mmf 10% Tubular
TCC 2.2-11	C41	2.2 mmf 10% Tubular
TCC 4.7-11	C10, 11	4.7 mmf 10% Tubular
TCC 5-11	C38	5 mmf 10% Tubular
TCC 22-12	C7	22 mmf 5%
TCC 361-10	C1, 2, 3, 4, 55, 56	360 mmf 600V Miniature
TCC 152-10	C21, 35, 61	1500 mmf Tubular Dip. Insulation
TCC 502SP	C8, 12, 17, 22, 27, 29, 31, 32, 33, 34, 37, 39, 49, 50, 51, 52, 53, 54, 68, 71	5000 mmf 600V Flat
TCM 471-2	C68	470 mmf 10% 500 WVDC
		Mica
TCM 101-14	C46, 83	100 mmf 10% 1000 WVDC
TCM 271-13	C6, 28, 30, 42, 45	270 mmf 20% 1000 WVDC
TCM 331-5	C19	330 mmf 10% 300 WVDC
TCM 122VAR	C62	350-1200 mmf padder
TCM 361-6	C60	360 mmf 5%
TCM 751-8	C63	750 mmf 10% 500 WVDC
TCM 502-8	C84	5000 mmf 10% 500 WVDC
		Fine Tuner
TAS 503D	Condenser & Bushing Assembly	
TAS 502D	Condenser Shaft & Pulley	
SG 1	Spring	
CR 2	Drive Cord	

RESISTORS

PART NUMBER	SCHEMATIC	DESCRIPTION
		½ watt carbon
TRC 470-1	R9	47 ohms
TRC 560-2	R2	56 ohms 10%
TRC 680-1	R60, 62	68 ohms
TRC 820-3	R20, 25	82 ohms 5%
TRC 820-2	R10, 27	82 ohms 10%
TRC 101-1	R59	100 ohms
TRC 151-1	R23, 28	150 ohms
TRC 331-2	R3	330 ohms 10%
TRC 471-1	R11	470 ohms
TRC 561-1	R49	560-ohms
TRC 102-1	R1, 4, 90	1K ohms
TRC 152-3	R62	1.5K ohms 5%
TRC 272-1	R35	2.7K ohms
TRC 472-1	R86, 87	4.7K ohms
TRC 472-3	R6	4.7K ohms 5%
TRC 572-3	R61	7.5K ohms 5%
TRC 822-3	R36	8.2K ohms 5%
TRC 103-3	R24	10K ohms 5%
TRC 103-1	R44	10K ohms
TRC 113-3	R21, 26	11K ohms 5%
TRC 273-1	R7, 8, 79	27K ohms
TRC 473-1	R14, 32,	47 K ohms
TRC 513-3	R75, 76, 77	51K ohms 5%
TRC 683-3	R40	68K ohms 5%
TRC 104-1	R42, 45, 46, 48, 80, 81	100K ohms
TRC 184-2	R83	180K ohms 10%
TRC 224-1	R34, 84, 85, 73	220K ohms
TRC 394-1	R17, 89, 92	390K ohms
TRC 474-1	R19	470K ohms
TRC 105-1	R5, 37, 47, 64	1 Megohm
TRC 225-1	R31	2.2 Megohms
TRC 335-1	R65	3.3 Megohms
TRC 475-1	R101, 102	4.7 Megohms
TRC 565-1	R98, 100	5.6 Megohms
TRC 685-1	R18	6.8 Megohms
TRC 106-1	R16, 94, 95	10 Megohms
TRC 276-2	R96	27 Megohms 10%
TRC 221-1	R103,104,105	220 ohms
		½ watt wirewound
TRW 151-1	R29, 30	150 ohms
		1 watt carbon
TRC 682-6	R40	6.8K ohms 5%
TRC 104-4	R63, 88	100K ohms 20%
TRC 475-5	R97, 99	4.7 megohms 10%
TRC 225-5	R66, 67, 68 69	2.2 megohms 10%
		1 watt wirewound
TRW 151-4	R57, 58	150 Ohms
		2 watt wirewound
TRW 860-8	R52	86 Ohms 10%
TRW 681-8	R56	680 Ohms 10%
		Ballast
TBR 102D		Ballast Resistor
		Potentiometers
TVC 100D	R15	Volume and Switch
TVC 101D	R38, 43	Dual-Contrast and Brightness
TVC 103D	R93	Height Control
TVC 116D	R74	Width Control
TVC 118D	R78, 91	Dual Hor. & Vert. Hold
TVC 510D	R70	Focus Control
TVC 511D	R71, 72	Centering Ctrol (Tapped)

RECEIVER REAR CHASSIS CONTROLS

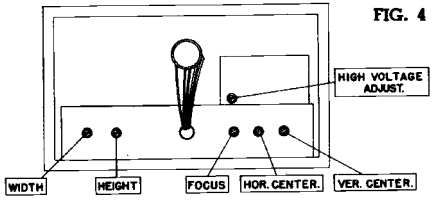

FIG. 4

NOTE: THE CHANNEL NUMBERS ON THE ESCUTCHEON DO NOT CORRESPOND TO THE LOCATION OF THE OSCILLATOR COILS.

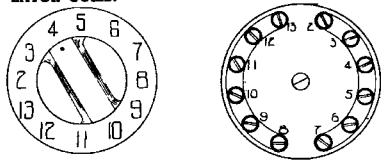

FIG. 6

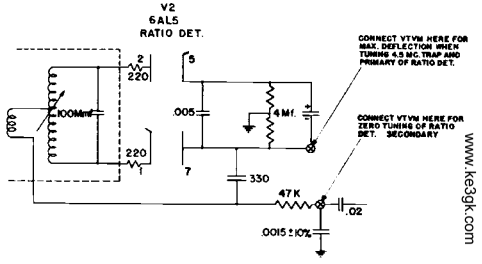

FIG. 8

www.ke3gk.com

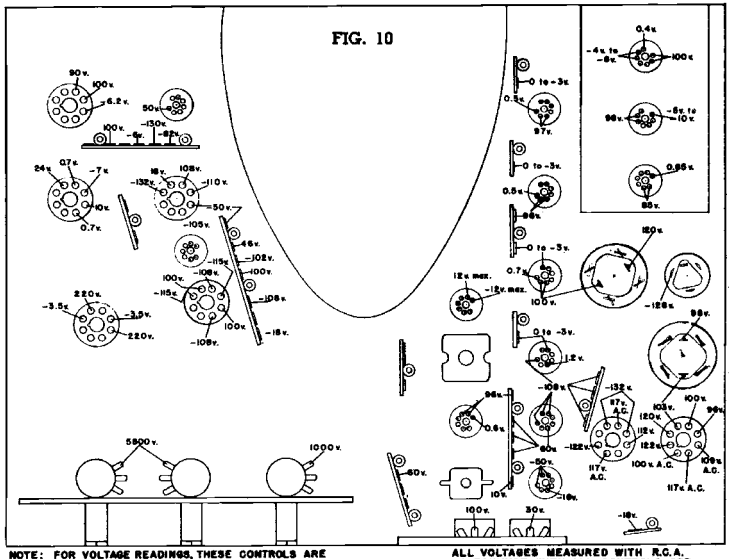

FIG. 10

NOTE: FOR VOLTAGE READINGS, THESE CONTROLS ARE SHOWN IN END VIEW.

ALL VOLTAGES MEASURED WITH R.C.A. VOLTOHMYST, WITH ALL CONTROLS SET FOR NORMAL PICTURE.

Voltage Check Chart

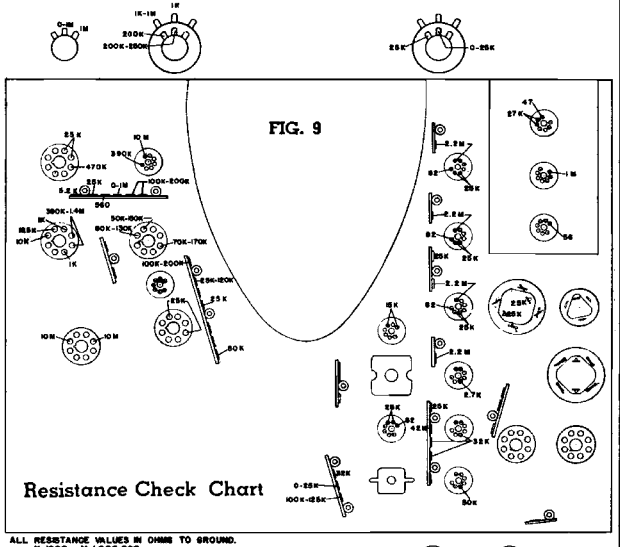

FIG. 9

Resistance Check Chart

ALL RESISTANCE VALUES IN OHMS TO GROUND.
K=1000, M=1,000,000
WHEREVER THE RESISTANCE TO GROUND INCLUDES RESISTANCE OF A POTENTIOMETER, THE RANGE BETWEEN EXTREME SETTINGS OF THE CONTROL IS INDICATED.

©John F. Rider

MODEL 13-G-3

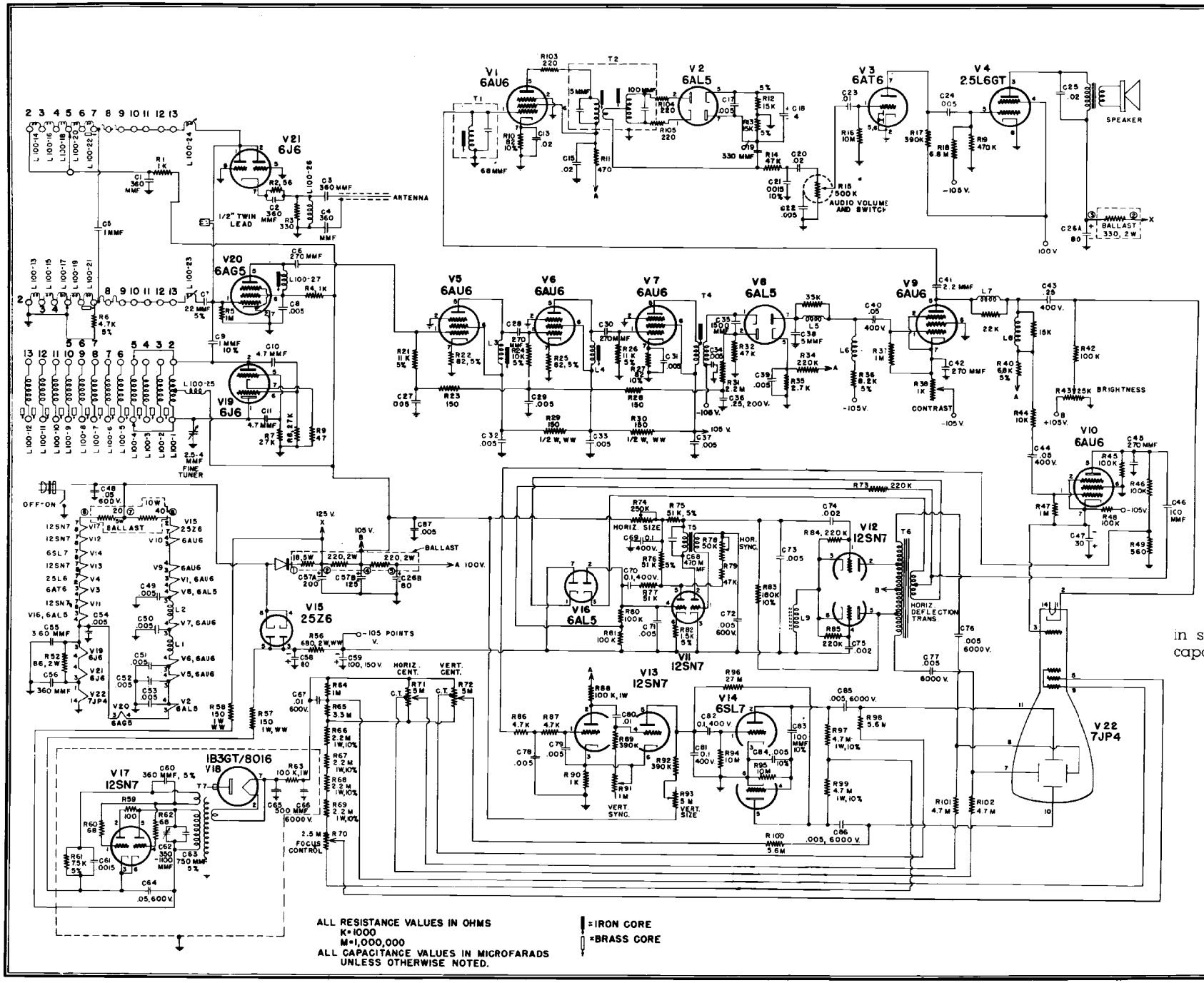

V1 4.5 M.C. AMPLIFIER
V2 RATIO-DETECTOR
V3 AUDIO AMPLIFIER
V4 AUDIO OUTPUT
V5 1st I.F. AMPLIFIER
V6 2d I.F. AMPLIFIER
V7 3d I.F. AMPLIFIER
V8 VIDEO DETECTOR & A.G.C.
V9 VIDEO AMPLIFIER
V10 SYNC. SEPARATOR & D.C. RESTORER
V11 HORIZ. OSC. & A.F.C. AMPLIFIER
V12 HORIZ. DEFLECTION AMPLIFIER
V13 VERTICAL OSCILLATOR
V14 VERT. DEFLECTION AMPLIFIER
V15 LOW VOLTAGE RECTIFIER
V16 A.F.C. DISCRIMINATOR
V17 HIGH VOLTAGE R.F. OSC.
V18 HIGH VOLTAGE RECTIFIER
V19 OSCILLATOR
V20 CONVERTER
V21 R.F. AMPLIFIER
V22 PICTURE TUBE

C59 (Pa-X 107D1) in some receivers may have capacitance 110 mfd.

ALL RESISTANCE VALUES IN OHMS
K=1000
M=1,000,000
ALL CAPACITANCE VALUES IN MICROFARADS UNLESS OTHERWISE NOTED.

▌=IRON CORE
▯=BRASS CORE

www.ke3gk.com

©John F. Rider

SPECIFICATIONS

POWER SUPPLY	110 to 120 Volt, 60 Cycle Alternating Current	TUNING RANGE	Channels 2-13, inclusive
WATTS	250	LOUD SPEAKER	8 Inch P.M.
CIRCUIT	Inter-Carrier Sound	VOICE COIL IMPEDANCE	3.2 Ohm at 400 Cycles
R.F. STAGE	One	POWER OUTPUT	Undistorted 2.5 Watts
I.F. STAGES	Three "Combined Picture and Sound" and one "Sound"		Maximum 4.5 Watts
I.F. FREQ.	23.4 and 25.75 M.C.; Sound 4.5 M.C.	ANTENNA INPUT	300 Ohms Balanced

TUBE COMPLEMENT

1—6BH6	R.F. Amplifier Tube	1—6AU6	Sync Separator and D.C. Restorer Tube	1—6SN7	Horizontal Oscillator Tube
1—6AG5	Modulator Tube	1—6AU6	Sound I.F. Amplifier Tube	1—6BG6	Horizontal Output Tube
1—12AT7 or 6C4	Oscillator Tube	1—6AL5	Sound Detector Tube	1—8016-1B3GT	H.V. Rectifier Tube
3—6AG5	Video I.F. Amplifier Tube	1—6SQ7	Audio Amplifier Tube	1—5V4	Damper Rectifier Tube
1—6AL5	Video Detector Tube	1—6AR5	Audio Output Tube	1—6SN7	Vertical Oscillator Tube
1—6AU6	Video Amplifier Tube	1—6SN7	Sync Amplifier and Phase Splitter Tube	1—6SN7	Vertical Amplifier Tube
		1—6AL5	Phase Detector Tube	1—5U4	Power Rectifier Tube
				1—10BP4	Picture Tube

INSTALLATION

GENERAL—For best results this Firestone receiver should be installed by a competent television serviceman who is properly equipped to make necessary adjustments to the receiver and determine the most suitable type of antenna installation.

POWER SUPPLY—This television receiver must be operated on a power supply of 110-120 volts AC, 60 cycles only.

TUBES—All the tubes, including the picture tube, are properly mounted in their sockets when the receiver is shipped. There is a possibility, however, that (except for the picture tube) they have worked loose during shipment. The tubes are accessible through the back of the cabinet; press them (except the picture tube) firmly into the sockets.

ANTENNA—The wires of the antenna lead-in must be connected to the two posts marked "A" on the Tuner Chassis.
When the installation is close to sources of man-made interference, a reduction in this interference may be made by attaching a ground to the post marked "G" on the chassis.

OUTDOOR ANTENNA—To insure good results, we recommend the use of Firestone outdoor antennas. These antennas will provide unusually fine reception of both high and low band channels.

INDOOR ANTENNA—Indoor antennas, although acceptable in many cases, are subject to many disturbing factors. For example; viewers approaching the antenna, electrical appliances within the home, defective lighting fixtures etc., all of which will affect the receiver where an indoor antenna is used and would probably be eliminated with an outdoor installation. However, in cases where an indoor antenna is acceptable, or becomes a necessity because of local restrictions, etc., we recommend the Firestone indoor antenna.

MISCELLANEOUS

IF STATION BUZZ is excessive and is NOT DUE to "Contrast" control being too far advanced in clockwise direction, adjust Discriminator Secondary adjustment screw for MINIMUM buzz. MAKE SURE THAT THIS POSITION IS BETWEEN the two MAXIMUM buzz peaks that will be noticed when adjusting screw is turned to the right and left of the MINIMUM buzz position. This screw is located on top of the Discriminator Coil Shield Can which is mounted on Tuner Chassis between 6AL5 Sound Detector tube and 6AU6 Sound I.F. Amplifier tube.

WHILE EACH RECEIVER IS CORRECTLY ALIGNED AT THE FACTORY, ROUGH HANDLING in transit, ageing, drift, etc., MAY THROW THE RECEIVER OFF, so we suggest that the proper oscillator trimmers and the discriminator secondary adjustment—be checked for correct adjustment with a transmitted television station pattern, in the customer's home at the time of installation. Be sure to have the set operating for one-half to one hour before making these adjustment checks.

TO CHECK OSCILLATOR TRIMMER ADJUSTMENTS:

(A) Pull off the four front panel control knobs and remove the escutcheon underneath the knobs marked "Contrast," "On-Off-Vol," "Brightness" and "Channel" by unscrewing the four screws holding this to the front panel of the cabinet. This will expose the 12 Oscillator Trimmer adjustment screws located around the Channel Selector Switch shaft. Starting with the first adjustment screw at the lower left side of the shaft and reading from left to right (clockwise), the first slotted round-head screw is Channel 13 Oscillator Trimmer adjustment screw. The second screw from the left is Channel 12 Oscillator Trimmer adjustment screw, the third is Channel 11, etc.

(B) Turn receiver Channel Selector Switch to channel on which TV station is transmitting its modulated test pattern and adjust "Contrast" and "Brightness" control for best definition of pattern. IMPORTANT—There are 14 positions on the Channel Selector Switch. The MAXIMUM RIGHT and LEFT positions are NOT USED.

(C) Turn proper Oscillator Trimmer adjustment Screw clockwise until sound appears on pattern—indicated by bars across pattern and/or the lower vertical lines in pattern becoming wavy—then turn SAME Oscillator Trimmer adjustment screw counter-clockwise just to the point where the sound bars and/or wavy lines in pattern disappear.

CORRECTLY ADJUSTED PICTURE AND PATTERN: Note that when the receiver is correctly adjusted, the pattern is clear and steady and in the center of the screen with five distinct shades—black, dark gray, medium gray, light gray and white.

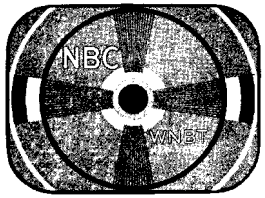

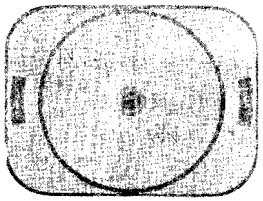

When picture is TOO LIGHT and/or has retrace lines, adjust BRIGHTNESS CONTROL. A slight readjustment of the Contrast Control may also be necessary.
CAUTION: If the control is turned too far to the right, the picture will start to balloon, that is, become larger. Always adjust below this point.

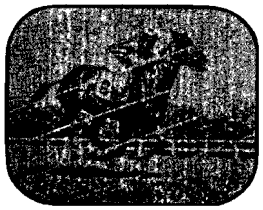

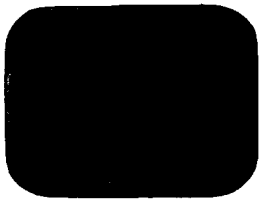

If picture has TOO MUCH CONTRAST as shown, adjust CONTRAST CONTROL to show less contrast. A slight readjustment of the Brightness Control may also be necessary.
CAUTION: If the control is turned too far to the right, a buzzing sound may be heard. Always adjust below this point.

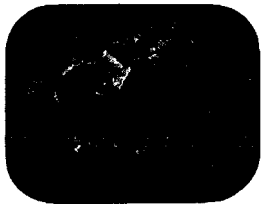

"OFF-ON-VOLUME" control knob: To turn receiver on, turn knob clockwise. To turn receiver off, turn knob to left until click is heard. Use this knob to adjust volume to desired level.

TURN CHANNEL SELECTOR KNOB until dot on knob indicates desired channel number.

The "Contrast" and "Brightness" controls may be adjusted at any time there is a picture or test pattern on the air. Because it is easier to adjust the controls with a test pattern picture, television stations usually telecast a pattern before the beginning of and sometimes between, the regularly scheduled programs. The test pattern, used below to illustrate "Correct Pattern," "Too Light Pattern" and "Too Much Contrast Pattern" is one telecast by a station for this purpose. While the type of pattern will vary in design and appearance with stations, its purpose is the same—to permit the television owner to adjust the controls before the start of the regular program.

www.ke3qk.com

©John F. Rider

This receiver can be aligned with equipment generally available to the serviceman as outlined in Paragraphs (1), (2) and (3). Paragraph (4) is an alternate procedure for visual oscillator alignment and requires the use of a Marker Generator, Sweep Generator and Oscilloscope.

Required equipment:

Vacuum Tube Voltmeter of the Voltohmist type.

AM Signal Generator that will supply a 4.5 M.C. signal within ¼ of 1% of this frequency and 23.4 M.C. and 25.75 MC signals within 1% of these frequencies.

6AG5 Modulator Tube Adapter with a 1½ volt battery. This adapter may be obtained from your Firestone Warehouse by ordering Part No. AD 6AG5, or one may be made by following construction details in Fig. #1.

(1) PROCEDURE FOR VIDEO I.F. ALIGNMENT:

(A) Connect the V.T.V.M. across the Video Second Detector 8200 ohm load resistor. This resistor is in the Tuner Chassis and is attached to the center terminal of the 5-terminal tie-lug strip mounted on underside of chassis alongside of power transformer.

(B) Attach the flexible wire of the 6AG5 Adapter to the grid (pin #1) of the 6AG5 Modulator tube. Then press adapter down so that ground contact on bottom of adapter clamps to chassis—this will hold adapter in place and provide ground connection.

(C) Connect the AM Signal Generator leads to the two 6AG5 Adapter leads. This adapter will then feed the output of the Signal Generator between the grid (Pin #1) of the 6AG5 Modulator tube and ground, and will apply a 1½ volt negative bias on grid of the 6AG5 tube.

(D) Set AM Signal Generator to deliver a 25.75 M.C. signal. IMPORTANT—this **must** be within 1% of 25.75 M.C. KEEP OUTPUT OF GENERATOR SO THAT A READING OF APPROXIMATELY 3 VOLTS IS OBTAINED ON V.T.V.M.

(E) Adjust the fourth (4th) and second (2nd) Video I.F. adjustment screws (in that order) for maximum reading on the V.T.V.M.
The Video I.F. adjustment screws are mounted on top of the Tuner Chassis, adjacent to the three (3) 6AG5 and one (1) 6AL5 tubes. Looking at the front of the Tuner Chassis, the first trimmer is the one to use for adjusting the first (1st) Video I.F., the second one for the second (2nd) Video I.F., the third one for the third (3rd) Video I.F, and the fourth one for the fourth (4th) Video I.F.

(F) Set AM Signal Generator to deliver a 23.4 M.C. signal. IMPORTANT—this **must** be within 1% of 23.4 M.C. KEEP OUTPUT OF GENERATOR SO THAT A READING OF APPROXIMATELY 3 VOLTS IS OBTAINED ON V.T.V.M.

(G) Adjust the third (3rd) and first (1st) Video I.F. adjustment screws (in that order) for maximum reading on the V.T.V.M.

(H) Check Video band width by setting the AM Signal Generator first to 25.75 M.C. and then to 23.4 M.C. and noting the reading on the V.T.V.M. obtained with each of these signals. Voltage reading should be approximately the same for both. If the band width is not correct, as indicated by substantially different V.T.V.M. readings, a slight adjustment of the first (1st) Video I.F. adjustment screw probably will be sufficient to improve the band width.

NOTE: Slight differences in VTVM readings may be due to difference in AM Signal Generator output at 25.75 M.C. and 23.4 M.C. Always adjust AM Signal Generator output to same level for each frequency.

After these adjustments have been completed, remove the 6AG5 Modulator tube adapter.

(2) PROCEDURE FOR SOUND I.F. ALIGNMENT:

(A) Connect the V.T.V.M. across the 10 Mfd. electrolytic capacitor. This capacitor is connected between Pin #7 of the 6AL5 Sound Detector (Discriminator) tube sound and ground.

(B) Connect the output leads of an AM Signal Generator to Pin #5 (Plate) of the 6AU6 Video Amplifier tube socket, through a .01 Mfd. capacitor, and to chassis.

(C) Set AM Signal Generator to deliver a modulated 4.5 M.C. signal.
IMPORTANT: **This *must* be within ¼ of 1% of 4.5 M.C.**

(D) Adjust the 4.5 M.C. input coil trimmer adjustment screw (this is mounted on top of Tuner Chassis adjacent to the 6AU6 Sound I.F. tube) for maximum reading on the V.T.V.M.

(E) Next adjust the 4.5 M.C. discriminator primary adjustment screw (this is located below the Discriminator Coil shield can and is accessible from bottom side of Tuner Chassis) for maximum V.T.V.M. reading.

(F) Remove the V.T.V.M. leads from the 10 Mfd. electrolytic capacitor and connect these leads between the terminal connected end of the 39,000 ohm discriminator secondary resistor and the center tap of the two resistors in the output of the 6AL5 Sound Detector tube. Looking at the bottom from the rear of the Tuner Chassis, the 39,000 ohm resistor is connected to the third (3rd) terminal of the 6-terminal tie-lug strip that is attached to the right chassis flange below the 6AL5 Sound Detector tube socket. The center tap of the two resistors in the output of the 6AL5 Sound Detector tube is connected to the second (2nd) terminal of the same tie-lug strip.

(G) Adjust the discriminator Secondary adjustment screw for zero V.T.V.M. reading. Make sure that this zero reading is **between** the two peaks that will be noticed when adjustment screw is turned to the right and left of the zero point. This screw is on top of the Discriminator Coil shield can—the shield can is mounted on top of the Tuner Chassis between the 6AL5 Sound Detector tube and 6AU6 Sound I.F. Amplifier tube.
After these adjustments have been completed remove the V.T.V.M. leads from the 39,000 ohm resistor and center tap of the two resistors in the output of the 6AL5 Sound Detector tube.

(3) PROCEDURE FOR OSCILLATOR ALIGNMENT:

For Oscillator Alignment, the television station operating on the channel to be aligned must be transmitting its test pattern and modulating its sound carrier.

(A) Turn receiver Channel Selector Switch to the channel requiring alignment.

(B) Turn proper Oscillator Trimmer adjustment screw clockwise until sound appears on pattern—indicated by bars across pattern and/or the lower vertical lines in pattern become wavy.—then turn SAME Oscillator Trimmer Adjustment screw counter-clockwise just to the point where the sound bars and/or wavy lines in pattern disappear.
The twelve (12) Oscillator Trimmer adjustment screws are located around the Channel Selector Switch shaft and are accessible through holes in the front of the Tuner Chassis. Looking at the front of the Tuner Chassis, and reading from right to left (clockwise), the first slotted round-head screw is Channel 13 Oscillator Trimmer adjustment screw. The second screw from the right is Channel 12 Oscillator Trimmer adjustment screw; the third is Channel 11, etc.
The individual channel oscillator trimmer adjustments are independent of each other and can be aligned in any order. However, if any channel cannot be aligned properly, because of insufficient range of its oscillator trimmer adjustment screw, it can be brought in by means of the Padder Trimmer Screw, located above the Channel Selector Switch shaft. It is very important to remember that adjusting this Padder will necessitate the re-alignment of ALL of the Oscillator Trimmers.

THE ABOVE PROCEDURES COVER ALL ADJUSTMENTS. THE ANTENNA AND R.F. STAGES ARE FACTORY PRE-SET AND BECAUSE THEY ARE SUFFICIENTLY BROAD WILL NOT REQUIRE ADJUSTMENT.

(4) ALTERNATE PROCEDURE FOR VISUAL OSCILLATOR ALIGNMENT WITH AN OSCILLOSCOPE.

Required equipment:

MARKER GENERATOR having a coverage from 50 M.C. to 216 M.C.

SWEEP GENERATOR capable of covering from 50 M.C. to 216 M.C. with a 10 M.C. sweep.

OSCILLOSCOPE.

(A) Connect the Sweep Generator leads to the 300 ohm receiver antenna terminals.

(B) Loosely couple the Marker Generator leads to the Sweep Generator leads—always keep coupling as loose as possible.

(C) Connect the Oscilloscope across the Video second detector 8200 ohm load resistor. This resistor is in the Tuner Chassis and is attached to the center terminal of the 5-terminal tie-lug strip mounted on underside of chassis alongside of power transformer.

(D) Set receiver Channel Switch and Sweep Generator Switch for channel to be aligned.

(E) Set Marker Generator to deliver the proper marker pip for the channel to be aligned. See Fig. #3 for proper marker frequency to be used for each of the 12 television channels.

(F) Adjust the proper Oscillator Trimmer screw so that the picture marker pip is 6DB (50%) down from the top peak of the Sweep Generator curve and the sound marker pip is approximately 26DB (95%) down on the opposite side of the curve. See Fig. #2 for correct positions of pips. The twelve (12) Oscillator Trimmer adjustment screws are located around the Channel Selector Switch shaft, and are accessible through holes in the front of the Tuner Chassis. Looking at the front of the Tuner chassis, and reading from right to left, (clockwise), the first slotted round-head screw is Channel 13 oscillator trimmer adjustment screw. The second screw from the right is Channel 12 oscillator trimmer adjustment screw, the third is Channel 11, etc. The individual channel oscillator trimmer adjustments are independent of each other and can be aligned in any order. However, if any channel cannot be aligned properly because of insufficient range of its oscillator trimmer adjustment screw, it can be brought in by means of the Padder Trimmer screw located above the Channel Selector Switch shaft. It is very important to remember that adjusting this Padder will necessitate the re-alignment of ALL of the oscillator trimmers.

THE ABOVE PROCEDURES COVER ALL ADJUSTMENTS. THE ANTENNA AND R.F. STAGES ARE FACTORY PRE-SET AND, BECAUSE THEY ARE SUFFICIENTLY BROAD, WILL NOT REQUIRE ADJUSTMENT.

ALIGNMENT DATA

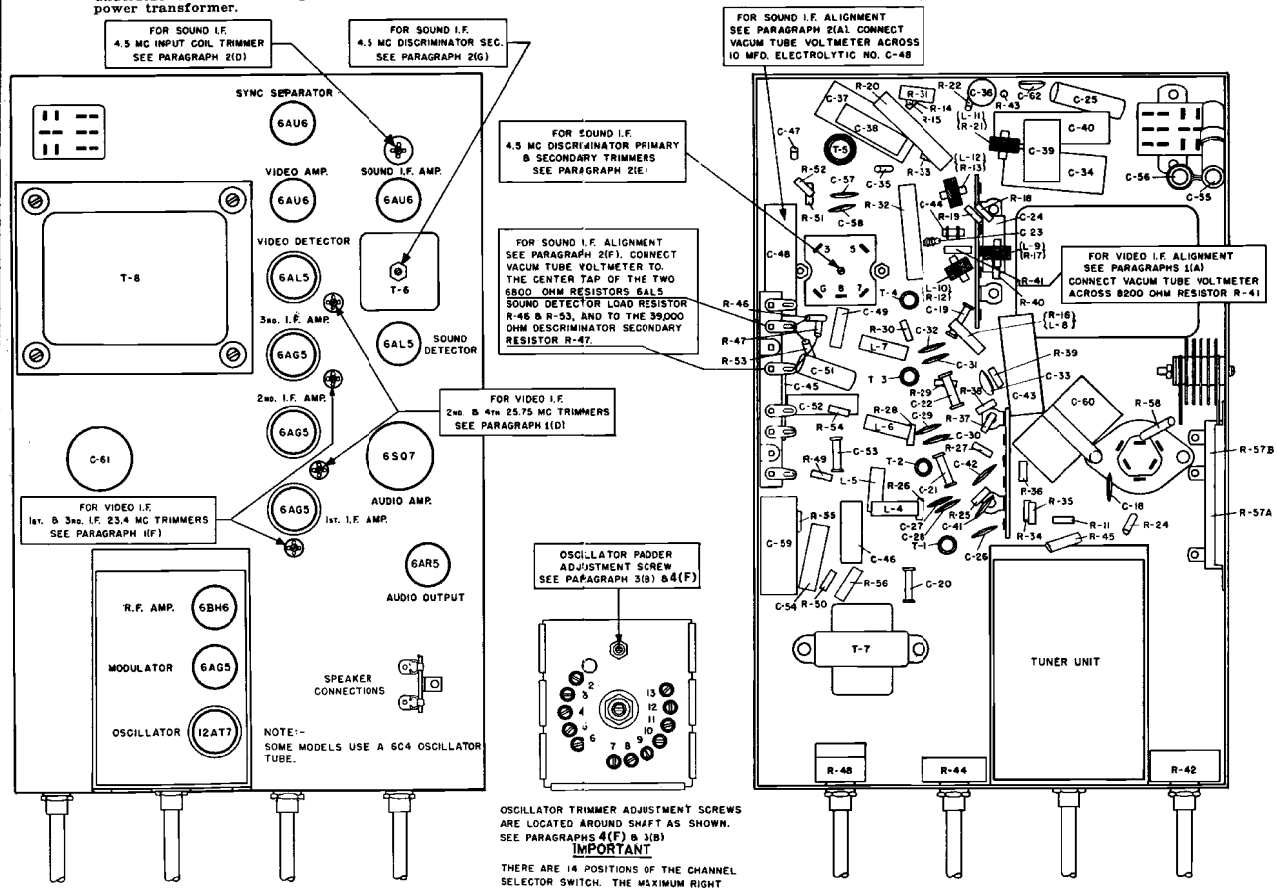

OSCILLATOR TRIMMER ADJUSTMENT SCREWS ARE LOCATED AROUND SHAFT AS SHOWN. SEE PARAGRAPHS 4(F) & 3(B)

IMPORTANT

THERE ARE 14 POSITIONS OF THE CHANNEL SELECTOR SWITCH. THE MAXIMUM RIGHT AND LEFT POSITIONS ARE NOT USED.

www.ke3qk.com

© John F. Rider

REAR PANEL CONTROL ADJUSTMENTS

DON'T DISTURB THE REAR PANEL CONTROLS UNNECESSARILY—IF THE PICTURE IS GOOD, LEAVE THEM ALONE.

Normally, after the receiver has been properly installed, only the front panel controls need be adjusted by the owner.

ONLY when the picture is too high or too low or does not stay locked in the center of the screen, or is egg-shaped or very fuzzy, will it be necessary to adjust one of the controls mounted on back of picture chassis.

IMPORTANT: Interference caused by electrical equipment, flashing signs, auto ignition systems, electric razors and medical short-wave diathermy machines may cause white streaks or herringbone bands across the picture. Aircraft in the immediate vicinity can cause fluctation in sound volume and picture brightness. Double images on the screen can be caused by reflections from buildings, mountains, etc. **NONE OF THESE DISTURBANCES CAN BE ELIMINATID BY ADJUSTMENT OF THE FRONT OR REAR CONTROLS.**

If you experience a poor quality television picture, do not immediately assume that the difficulty is in your receiver. The cause may be due to temporary station transmitter difficulties.

If a poor picture is noticed when a motion picture is being telecast, the difficulty may be due to the quality of the film being used by the station. Turn the "Channel Selector" knob to a different television station or wait until the end of the movie program. If there is no noticeable improvement in the picture, then adjustment of one or more of the controls on the back of the picture chassis may be necessary.

Before adjusting any of the rear controls, study the picture you are receiving and compare it with one of the illustrative patterns below having similar characteristics. If you find one similar to the picture you are receiving, ADJUST ONLY THE CONTROL INDICATED AS THE ONE TO BE USED to correct that particular type of mis-adjustment.

By having someone hold a mirror in front of screen or by placing the arm around the cabinet it is possible to adjust the required control and still look at the screen while making the adjustment. Turn the proper control slowly to the right or left until the picture is centered on the screen, stops rolling, becomes clear, etc.

If the receiver is located near the edge of the area served by the television station or is being operated with an inadequate aerial, the picture will be very light with a snow effect and may not hold steady on the screen. No adjustment of the rear panel controls can correct this condition.

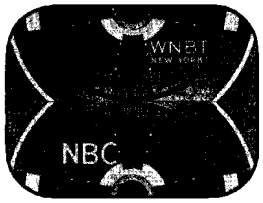

IF PATTERN continuously rolls across screen in vertical direction (up or down) ADJUST VERTICAL HOLD CONTROL so that pattern stops rolling and remains stationary on screen.

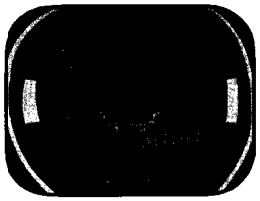

IF PATTERN is egg-shaped in vertical direction (flat on top), adjust VERTICAL LINEARITY CONTROL to make pattern round.
NOTE: If, after this adjustment, circle is round but is too small or too large, a slight adjustment of the HEIGHT CONTROL will be necessary to make circle fit on screen properly.

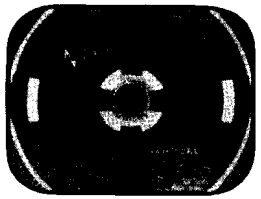

IF PATTERN IS FUZZY, ADJUST FOCUS CONTROL for sharpest definition.
NOTE: Have "Brightness" and "Contrast" controls on front of cabinet properly adjusted before adjusting Focus Control.

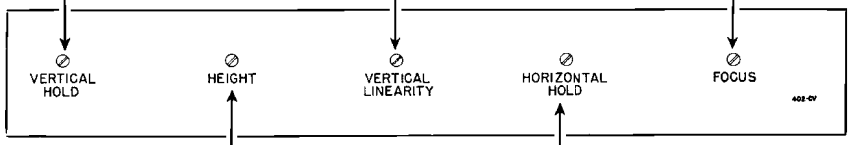

IF PATTERN extends over top and bottom of screen (too large) or is too small, in a vertical direction, adjust HEIGHT CONTROL to make circle fit on screen.
NOTE: If, after this adjustment, circle is not uniformly round, a slight adjustment of the VERTICAL LINEARITY CONTROL may be necessary.

IF PATTERN continuously breaks up in horizontal direction (LEFT TO RIGHT) ACROSS SCREEN, adjust HORIZONTAL HOLD CONTROL to bring pattern to stationary position on screen.

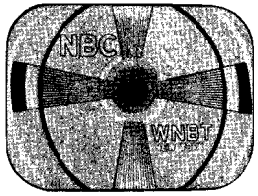

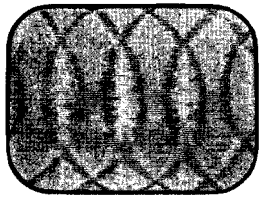

PICTURE TUBE CHASSIS
DEFLECTION, FOCUS AND ION TRAP ADJUSTMENTS

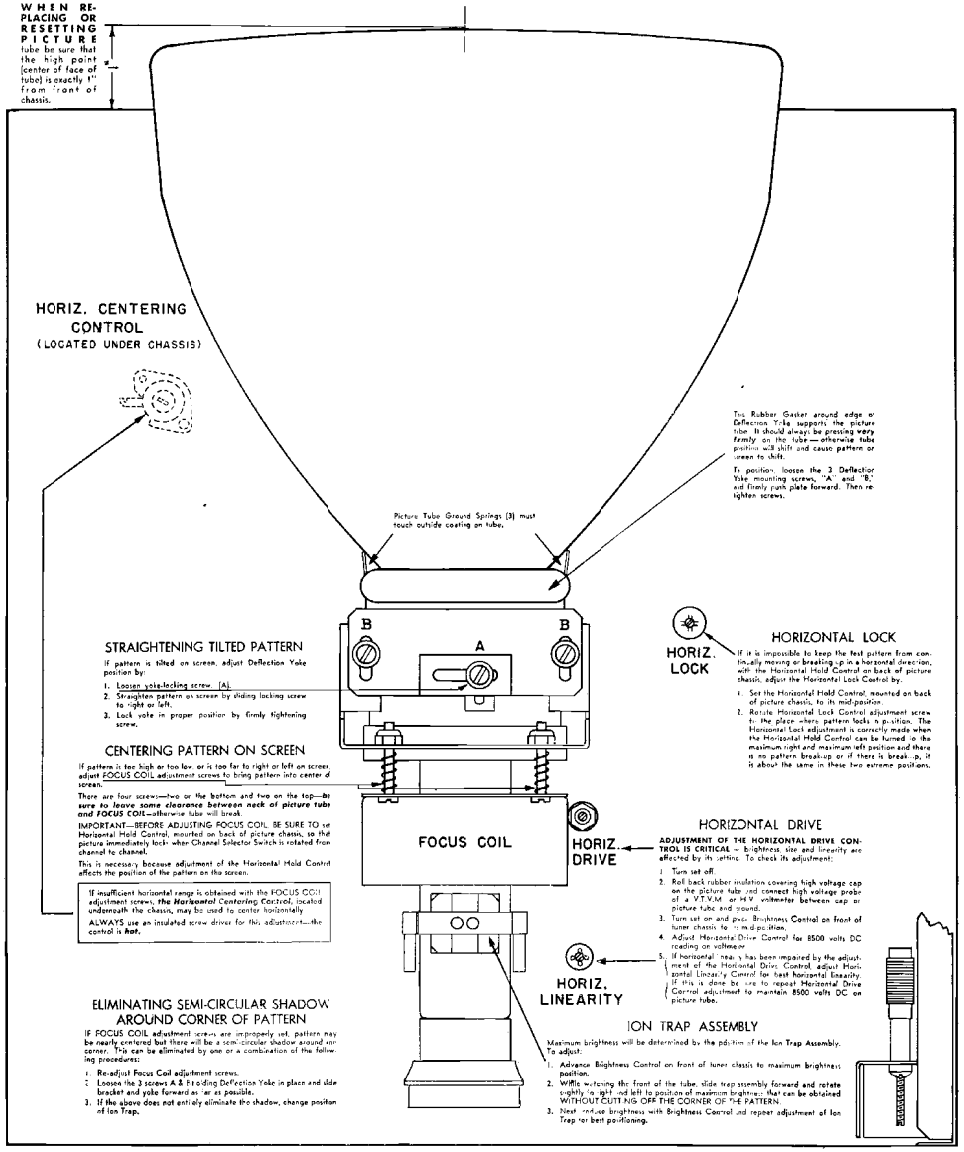

www.ke3gk.com

©John F. Rider

MODEL 13-G-5

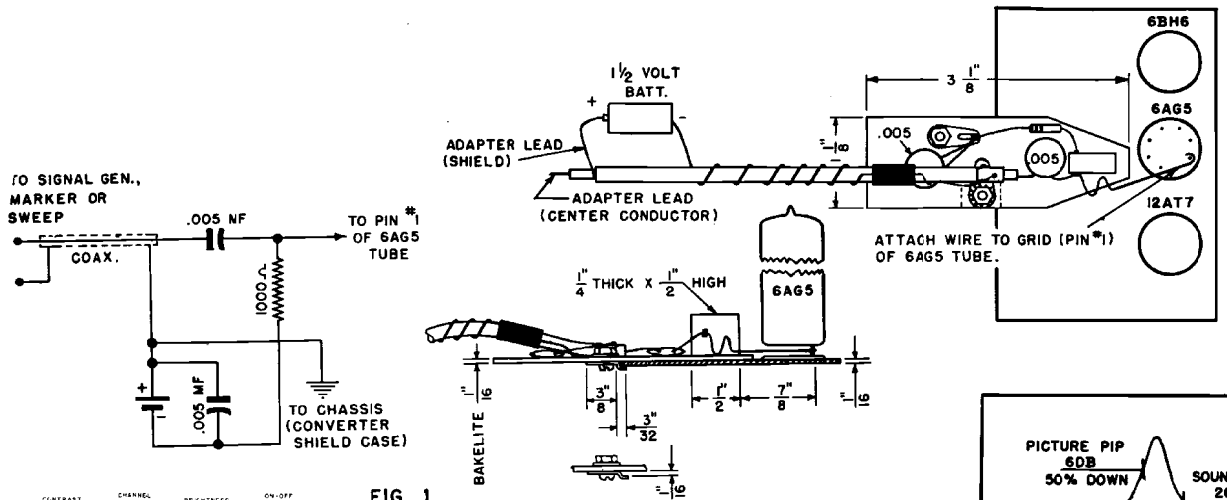

FIG. 1

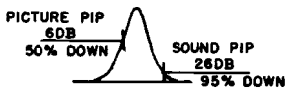

PICTURE OVERALL RESPONSE CURVE WITH PICTURE AND SOUND CARRIER MARKER PIPS.

FIG. 2

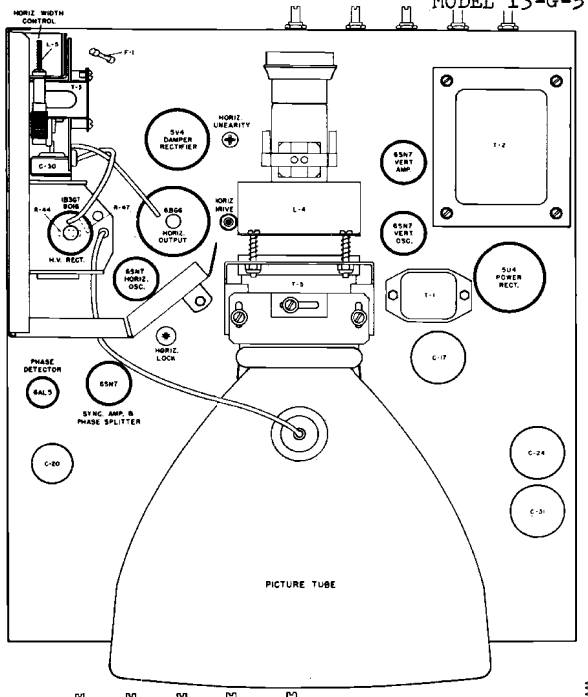

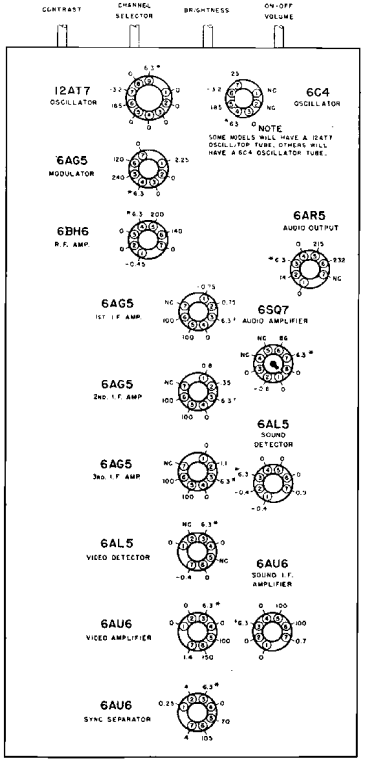

ALL VOLTAGES EXCEPT HEATERS AND 1B3GT-8016 HIGH VOLTAGE RECTIFIER TUBE ARE MEASURED FROM SOCKET TERMINALS TO CHASSIS WITH A 20,000 OHM PER VOLT VOLTMETER

WARNING: BE CAREFUL WHEN MEASURING HIGH VOLTAGES. USE HIGH VOLTAGE 50,000 OHM PER VOLT VOLTMETER WHEN MEASURING POINT (2) AND OB#4 TUBE HIGH VOLTAGES.

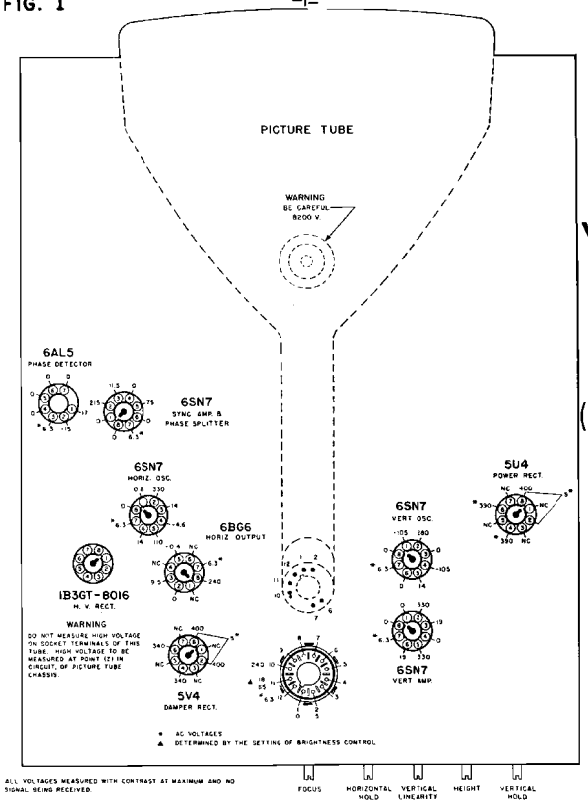

ALL VOLTAGES MEASURED WITH CONTRAST AT MAXIMUM AND NO SIGNAL BEING RECEIVED.

VOLTAGE TABLE

(BOTTOM VIEW OF CHASSIS)

Channel Number	Channel Freq. (Mc)	Picture Carrier Freq. (Mc)	Sound Carrier Freq. (Mc)
1	44-50	45.25	49.75
2	54-60	55.25	59.75
3	60-66	61.25	65.75
4	66-72	67.25	71.75
5	76-82	77.25	81.75
6	82-88	83.25	87.75
7	174-180	175.25	179.75
8	180-186	181.25	185.75
9	186-192	187.25	191.75
10	192-198	193.25	197.75
11	198-204	199.25	203.75
12	204-210	205.25	209.75
13	210-216	211.25	215.75

FIG. 3

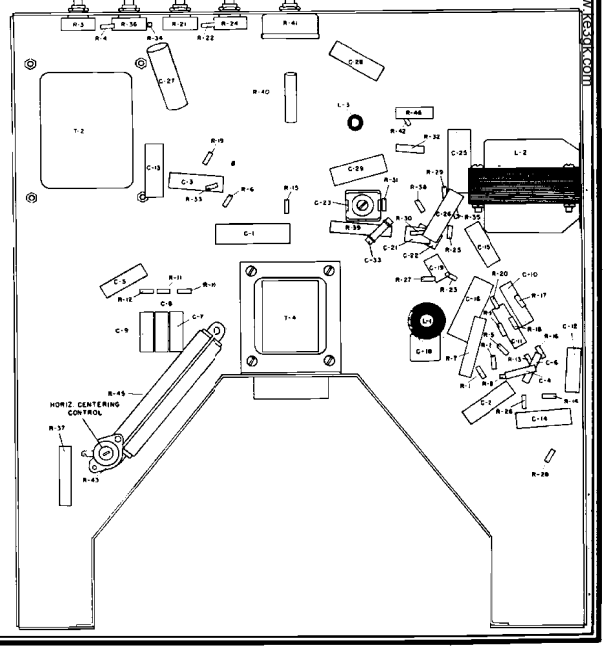

WWW.KE3QK.COM

©John F. Rider

www.ke3gk.com

MODEL 13-G-5

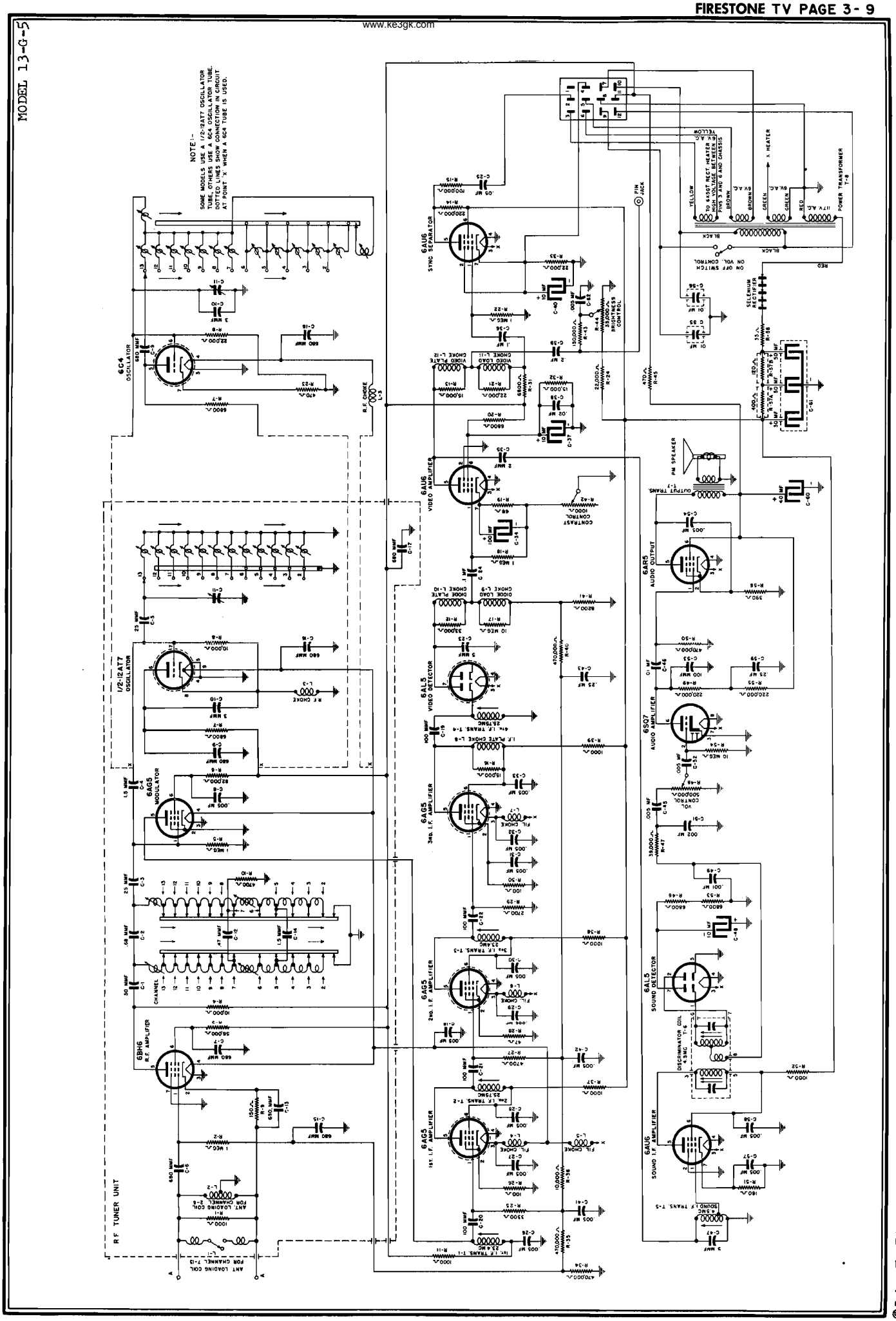

©John F. Rider

www.ke3gk.com

MODEL 13-G-5

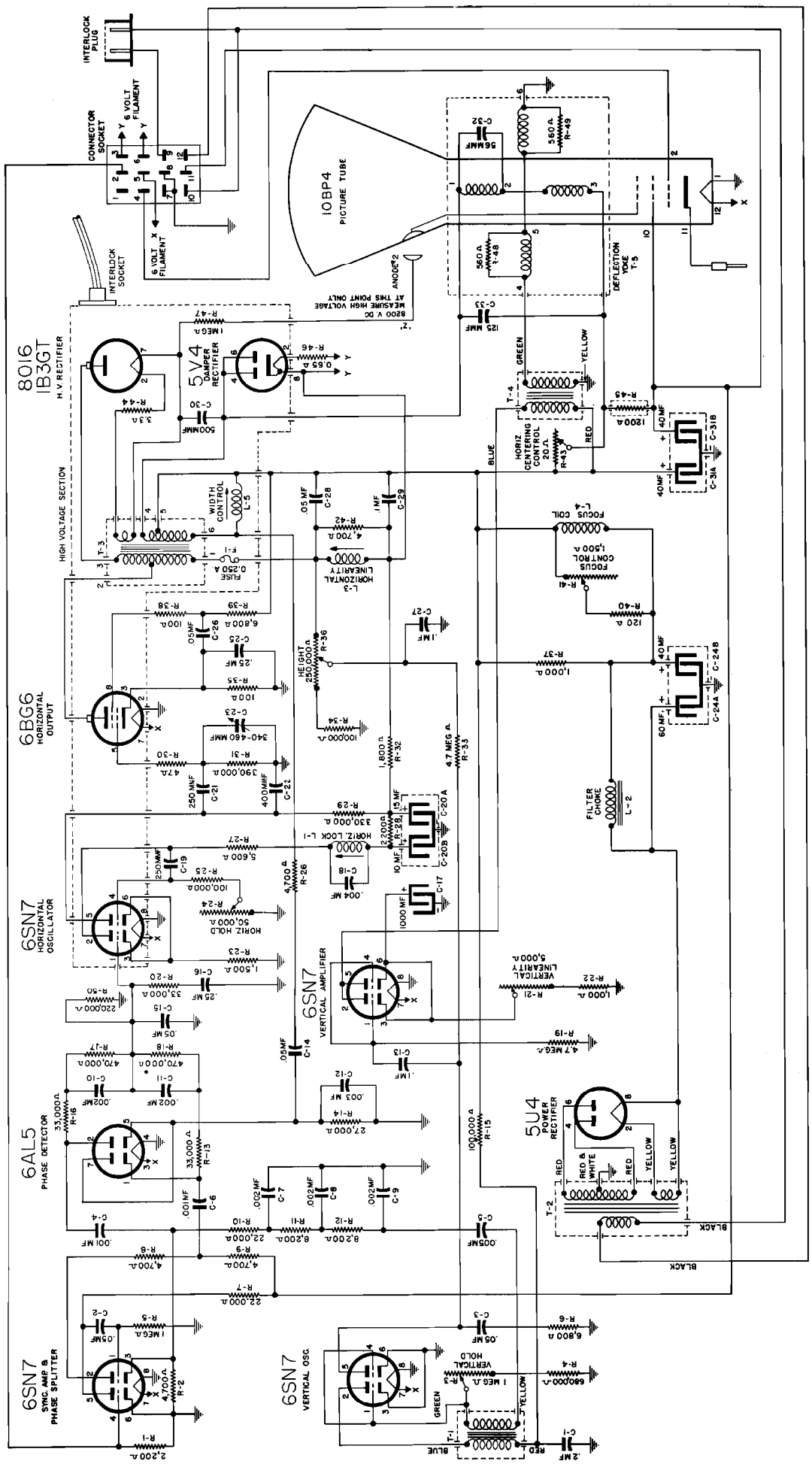

©John F. Rider

PARTS LIST

TUNER CHASSIS

CAPACITORS

Illus. No.	Our Part No.	DESCRIPTION
C-1	Part of Tuner Unit 20E364 See Misc. Parts	Ceramic, 50 MMF
C-2		Ceramic, 68 MMF
C-3		Ceramic, 25 MMF
C-5		Ceramic, 25 MMF
C-4		Ceramic, 1.5 MMF
C-14		Ceramic, 1.5 MMF
C-6		Ceramic, 680 MMF
C-7		Ceramic, 680 MMF
C-9		Ceramic, 680 MMF
C-13		Ceramic, 680 MMF
C-15		Ceramic, 680 MMF
C-16		Ceramic, 680 MMF
C-17		Ceramic, 680 MMF
C-8		Ceramic, .005 MF
C-10		Ceramic, 3 MMF
C-11		Slug Trimmer
C-12		Ceramic, 47 MMF
C-29, C-18, C-30, C-26, C-31, C-27, C-32, C-28, C-33, C-41, C-42, C-57, C-58, C-62	23E2025	Fixed Ceramic, .005 MFD
C-54	23E608	Tubular, .005 MFD 600V.
C-19, C-20, C-21, C-22, C-53	23E11	Fixed Ceramic, 100 MMF 500 V.
C-23	23E28	Fixed Ceramic, 5 MMF 500 V.
C-24	23E2014-9	Fixed Paper, 1 MFD 500 V.
C-25	23E216	Fixed Paper, .05 MFD 200 V.
C-34	25E12	Dry Electrolytic, 100 MFD 10 V.
C-35	23E21	Fixed Ceramic, 2 MMF 500 V.
C-36	23E2014-23	Fixed Paper, .1 MFD 400 V.
C-37	25E35	Dry Electrolytic, 10 MFD 250 V.
C-38	23E413	Fixed Paper, .02 MFD 400 V.
C-39	23E2014-22	Fixed Paper, .2 MFD 400 V.
C-40, C-48	25E8	Dry Electrolytic, 10 MFD 25 V.
C-60	25E41	Dry Electrolytic, 40 MFD 450 V.
C-45, C-52	23E408	Fixed Paper, .005 MFD 400 V.
C-43, C-59	23E222	Fixed Paper, .25 MFD 200 V.
C-46	23E411	Fixed Paper, .01 MFD 400 V.
C-47	23E13	Fixed Ceramic, 3 MMF 500 V.
C-51	23E405	Fixed Paper, .002 MFD 400 V.
C-49	23E2012	Fixed Ceramic, .001 MFD.
C-55, C-56	23E250	Fixed Paper, .01 MFD 220 V. AC
C-61	25E30	Dry Electrolytic, 50-50-30 MFD 150 V.

RESISTORS

Illus. No.	Our Part No.	DESCRIPTION
R-1	Part of Tuner Unit 20E364 See Misc. Parts	Carbon, 1000 OHM
R-2		Carbon, 1 MEG OHM
R-5		Carbon, 1 MEG OHM
R-3		Carbon, 56,000 OHM
R-4		Carbon, 10,000 OHM
R-8		Carbon, 10,000 OHM, with 12AT7 tube
R-8		Carbon, 22,000 OHM, with 6C4 tube
R-6		Carbon, 82,000 OHM
R-7		Carbon, 6800 OHM
R-9		Carbon, 150 OHM
R-10		Carbon, 4700 OHM
R-23		Carbon, 470 OHM
R-11, R-37, R-18, R-39, R-52	27E102	Carbon, 1000 OHM, 1/3 Watt
R-12	Part of 20E363-2	Diode Plate Choke Assembly—
R-13	Part of 20E363-3	Video Plate Choke Assembly—
R-14, R-49, R-55	27E224	Carbon, 220,000 Ohm, 1/3 Watt
R-15	27E104	Carbon, 100,000 OHM, 1/3 Watt
R-16	Part of 2E79 I.F.	Plate Choke Assembly—
R-17	Part of 20E363-6	Diode Load Choke Assembly—
R-18, R-22	27E105	Carbon, 1 Megohm, 1/3 W.
R-19	27E680	Carbon, 68 Ohm, 1/3 W.
R-20	27E682-3	Carbon, 6800 Ohm, 1 W.
R-21	Part of 20E363-7	Video Load Choke Assembly—
R-24	27E223-2	Carbon, 22,000 Ohm, 1/2 W.
R-27	27E472	Carbon, 4,700 Ohm, 1/3 W.
R-25	27E332	Carbon, 3,300 Ohm, 1/3 W.
R-26, R-30	27E101	Carbon, 100 Ohm, 1/3 W.
R-28	27E470	Carbon, 47 Ohm, 1/3 W.
R-29	27E272	Carbon, 2,700 Ohm, 1/3 W.
R-31	27E682-5	Carbon, 6,800 Ohm, 2 W.
R-32	27E153-5	Carbon, 15,000 Ohm, 2 W.
R-33	27E223	Carbon, 22,000 Ohm, 1/3 W.
R-34, R-35, R-40, R-50	27E474	Carbon, 470,000 Ohm, 1/3 W.
R-36	27E103	Carbon, 10,000 Ohm, 1/3 W.
R-41	27E822	Carbon, 8,200 Ohm, 1/3 W.
R-45	27E471	Carbon, 470 Ohm, 1/3 W.
R-42	28E31	Contrast Control, 1000 Ohm
R-43	27E154	Carbon, 150,000 Ohm, 1/3 W.
R-44	28E32	Brightness Control, 35,000 Ohm
R-46, R-53	27E682-2	Carbon, 6,800 Ohm, 1/2 W.
R-47	27E393	Carbon, 39,000 Ohm, 1/3 W.
R-48	28E33	On-Off-Vol. Control, 500,000 Ohm
R-51	27E181	Carbon, 180 Ohm, 1/3 W.
R-54	27E106	Carbon, 10 Megohm, 1/3 W.
R-56	27E391-3	Carbon, 390 Ohm, 1 W.
R-57A, R-57B	27E1006	Wire Wound Resistor
R-58	27E330-3	Carbon, 33 Ohm, 1 W.

COILS AND TRANSFORMERS

Illus. No.	Our Part No.	DESCRIPTION
L-1	Part of Tuner Unit 20E364 See Misc. Parts	Antenna Loading Coil for 7-13 Channel
L-2		Antenna Loading Coil for 2-6 Channel
L-3		R-F Choke
L-4, L-5, L-6, L-7	2E78	Coil, Filament Choke Assembly
L-8	Part of 2E79 I.F.	Choke Assembly—
L-9	Part of 20E363-6	Diode Load Choke Assembly—
L-10	Part of 20E363-2	Diode Plate Choke Assembly—
L-11	Part of 20E363-7	Video Load Choke Assembly—
L-12	Part of 20E363-3	Video Plate Choke Assembly—
T-1, T-2, T-3, T-4	20E360	Transformer (1st I.F., 2nd I.F., 3rd I.F., 4th I.F.)
T-5	20E361	Transformer, Sound I.F.
T-6	20E362	Transformer, Discriminator Coil
T-7	22E35	Transformer, Output for Speaker
T-8	22E27	Transformer, Power

PICTURE CHASSIS

CAPACITORS

Illus. No.	Our Part No.	DESCRIPTION
C-12	23E406	Tubular, .003 MF 400 V.
C-15	23E216	Tubular, .05 MF 200 V.
C-16, C-25	23E222	Tubular, .25 MF 200 V.
C-5	23E408	Tubular .005 MF 400 V.
C-7, C-8, C-9, C-10, C-11	23E405	Tubular, .002 MF 400 V.
C-2, C-3, C-14, C-26, C-28	23E416	Tubular, .05 MF 400 V.
C-13, C-29	23E418	Tubular, .1 MF 400 V.
C-27	23E618	Tubular, .1 MF 600 V.
C-1	23E420	Tubular, .2 MF 400 V.
C-20A, C-20B	25E38	Electrolytic, 15-10 MF 450 V.
C-31A, C-31B	25E37	Electrolytic, 40-40 MF 450 V.
C-17	25E39	Electrolytic, 1000 MF 25 V.
C-23	24E16	Trimmer 340-460 MMF Working Range
C-18	23E86	Mica, .004 MF, 500 V.
C-19, C-21	23E2030-3	Ceramic, 250 MMF, 500 V.
C-24A, C-24B	25E36	Electrolytic, 60-40 MF 450 V.
C-22	23E2030-4	Ceramic, 400 MMF, 500 V.
C-4, C-6	23E2012	Ceramic, .001 MF, 350 V.
C-33	23E2030-7	Ceramic, 125 MMF, 2,000 V.
C-32	Part of T-5	Ceramic, 56 MMF
C-30	23E2029	Ceramic, 500 MMF 10,000 V.

RESISTORS

Illus. No.	Our Part No.	DESCRIPTION
R-19, R-33	27E475-2	Carbon, 4.7 Megohm 1/2 W.
R-4	27E684-2	Carbon, 680,000 Ohm, 1/2 W.
R-5	27E105-2	Carbon, 1 Megohm, 1/2 W.
R-17, R-18	27E474-2	Carbon, 470,000 Ohm, 1/2 W.
R-29	27E1009-9	Carbon, 330,000 Ohm, 1/2 W.
R-34, R-15, R-25	27E104-2	Carbon, 100,000 Ohm, 1/2 W.
R-13, R-16, R-20	27E333-2	Carbon, 33,000 Ohm, 1/2 W.
R-14	27E273-2	Carbon, 27,000 Ohm, 1/2 W.
R-10	27E223-2	Carbon, 22,000 Ohm, 1/2 W.
R-11, R-12	27E822-2	Carbon, 8,200 Ohm, 1/2 W.
R-6	27E682-2	Carbon, 6,800 Ohm, 1/2 W.
R-27	27E1009-8	Carbon, 5,600 Ohm, 1/2 W.
R-2, R-8, R-9, R-26, R-42	27E472-2	Carbon, 4,700 Ohm, 1/2 W.
R-1, R-28	27E222-2	Carbon, 2,200 Ohm, 1/2 W.
R-23	27E152-2	Carbon, 1,500 Ohm, 1/2 W.
R-22	27E102-2	Carbon, 1,000 Ohm, 1/2 W.
R-48	Part of T-5(2E280)	Carbon, 560 Ohm, 1/2 W.
R-49	Part of T-5(2E280)	Carbon, 560 Ohm, 1/2 W.
R-38	27E101-2	Carbon, 100 Ohm, 1/2 W.
R-30	27E470-2	Carbon, 47 Ohm, 1/2 W.
R-32	27E182-3	Carbon, 1,800 Ohm, 1 W.
R-35	27E101-3	Carbon, 100 Ohm, 1 W.
R-7	27E223-5	Carbon, 22,000 Ohm, 2 W.
R-39	27E682-5	Carbon, 6,800 Ohm, 2 W.
R-37	27E102-5	Carbon, 1,000 Ohm, 2 W.
R-40	27E121-5	Carbon, 120 Ohm, 2 W.
R-47	27E105	Carbon, 1 Megohm, 1/3 W.
R-31	27E394	Carbon, 390,000 Ohm, 1/3 W.
R-46	27E1013	Wirewound, .65 Ohms, 4 W.
R-44	27E1015-4	Wirewound, 3.3 Ohms, 1/2 W.
R-45	27E1012	Wirewound, 1,200 Ohms, 11 W.
R-50	27E224	Carbon 220,000 Ohms, 1/3 W.

CONTROLS

Illus. No.	Our Part No.	DESCRIPTION
R-3	28E36	Vertical Hold, 1-Megohm
R-21	28E44	*Vertical Linearity, 5000 Ohm
R-24	28E43	Horizontal Hold, 50,000 Ohm
R-36	28E45	Height, 250,000 Ohm
R-31	28E42	Focus, 1500 Ohm
R-43	28E49	Centering, 20 Ohm

COILS AND TRANSFORMERS

Illus. No.	Our Part No.	DESCRIPTION
L-1	20E409	Coil, Horizontal Lock
L-3	20E410	Coil, Horizontal Linearity
L-4	20E424	Coil, Focus
L-5	20E415	Coil, Width Control
L-2	22E32	Choke, Filter
T-1	22E31	Transformer, Vertical Blocking Osc.
T-2	22E30	Transformer, Power 117 Volt, 60 Cycle
T-3	22E34	Transformer, Horiz. Output & High Voltage
T-4	22E33	Transformer, Vertical Output
T-5	2E80	Yoke, Deflection

MISCELLANEOUS PARTS

Illus. No.	Our Part No.	DESCRIPTION
	1E34	Speaker, 8" P.M.
	20E364	Tuner Unit, Channel Switch and Multiple Resistor-Capacitor Assembly
	20E363-2	Diode Plate Choke Assembly
	20E363-3	Video Plate Choke Assembly
	20E363-6	Diode Load Choke Assembly
	20E363-7	Video Load Choke Assembly
	2E79	I.F. Plate Choke Assembly
	57E3	Selenium Rectifier
	41E16	Line Cord, AC Cord with Female Receptacle
	17E31	Jack, Single Contact
	17E30	Plug, 12 Contact, Male
	17E32	Receptacle, AC 2 Contact, Male
	17E33	Socket, Connector 12 Contact, Female
	17E1-1	Socket, Octal
	17E1-24	Socket, for 1B3GT—8016 Tube
	17E1-14	Socket, Mica Filled Miniature
	20E411	Socket, for 10" tube
	20E419	Connector, Picture Anode Tube Lead with Cap
	20E422	Tube Clamp, Top for 10" Tube
	20E421	Tube Clamp, Bottom for 10" Tube
	50E76	Mtg. Bracket, with Rubber Bumpers for Deflection Yoke
	30E125	Front Mtg. Bracket, with 4 Elastic Stop Nuts, for Focus Coil
	33E81	Rubber Grommet (fits inside Focus Coil)
	15E122	Ion Trap
	40E6	Fuse, 1/4 Amp. 250 V.
	AD-6AG5	Adapter for 6AG5 Modulator Tube

CABINET MISCELLANEOUS

Illus. No.	Our Part No.	DESCRIPTION
	7E183	Cabinet Back
	7E180	Cabinet
	9E21	Safety Glass used in front of Picture Tube
	33E82	Gasket, Felt, for 10" Tube
	20E427-2	Knob, with Pointer
	37E55	Knob

www.ke3gk.com

©John F. Rider