PHOTOFACT* Folder

*TRADE MARK

RETMA MEMBER

PHILCO MODELS A-T1816, A-T1856W, A-T2230, A-T2272, A-T2275S, A-UT2272, 18B3000, 18B3001, 18B3100, L, HM, 18BU3000, 18BU3001, 18BU3100, L, HM, 22B4000, 22B4100, L, 22B4101, 22B4301, 22B4303, 22BU4000, 22BU4100, L, 22BU4101, 22BU4303 (Ch. D-81, D-181, R-81A, B, R-181, R-181U) (Codes 129, 130)

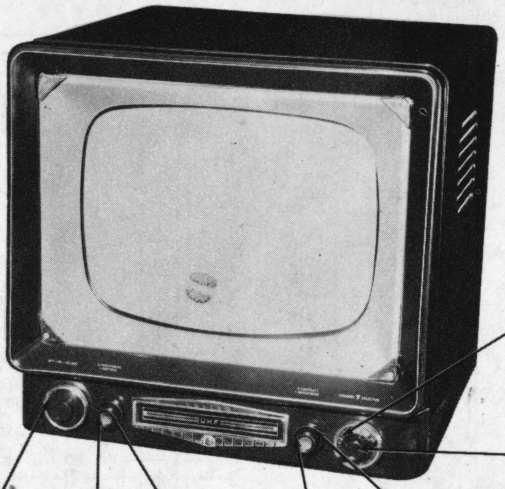

PHILCO MODEL 18B3001

TRADE NAME	PHILCO	MODELS	RF CHASSIS	SWEEP CHASSIS	CODE	UHF
		A-T1816	R-81A	D-81	129	
		A-T1856W	R-81A	D-81	129	
		A-T2230	R-81A	D-81	129	
		A-T2272	R-81A	D-81	129	
		A-UT2272	R-81A	D-81	129	UT21C
		A-T2275S	R-81A	D-81	129	
		18B3000	R-181	D-181	130	
		18BU3000	R-181U	D-181	130	UT21D
		18B3001	R-181	D-181	130	
		18BU3001	R-181U	D-181	130	UT21D
		18B3100, L, HM	R-181	D-181	130	
		18BU3100, L, HM	R-181U	D-181	130	UT21D
		22B4000	R-181	D-181	130	
		22BU4000	R-181U	D-181	130	UT21D
		22B4100, L	R-181	D-181	130	
		22BU4100, L	R-181U	D-181	130	UT21D
		22B4101	R-81B	D-81	129	
		22BU4101	R-81B	D-81	129	UT21C
		22B4301	R-181	D-181	130	
		22B4303	R-181	D-181	130	
		22BU4303	R-181U	D-181	130	UT21D
MANUFACTURER	Philco Corp., Tioga & "C" Sts., Philadelphia, Pa.					
TYPE SET	Television Receiver					
TUBES	Nineteen					
POWER SUPPLY	110-120 Volts AC-60 Cycle			RATING 1.2 Amp. @ 117 Volts AC		
TUNING RANGE	Channels 2 thru 13	, Video IF 26.6MC, Sound IF 22.1MC (Intercarrier)				

INDEX

Alignment Instructions 6, 7
Drive Cord Stringing (UHF) 21
Disassembly Instructions 22
Horizontal Sweep Circuit Adjustments 11
Parts List and Descriptions ..... 15 thru 18
Photographs
- Cabinet-Rear View 11
- Capacitor Identification (RF-IF Chassis) 4
- Capacitor Identification (Sweep Chassis) 14
- Chassis-Top View (RF-IF Chassis) 3
- Chassis-Top View (Sweep Chassis) 3
- RF Tuner 10
- Resistor Identification (RF-IF Chassis) 9

Photographs (Cont)
- Resistor Identification (Sweep Chassis) 19
- Trans., Inductor & Alignment Identification (RF-IF Chassis) .. 20
- Trans. Inductor & Alignment Identification (Sweep Chassis) 20

Resistance Measurements 8
Servicing in the Field 22
Schematic (UHF Tuner) 13
Schematic (TV) 2
Trouble Shooting Aids 12, 21
Tube Failure Check Chart 5
Tube Placement Chart (Bottom View) 8
Tube Placement Chart (Top View) 5

HOWARD W. SAMS & CO., INC. • Indianapolis 5, Indiana

"The listing of any available replacement part herein does not constitute in any case a recommendation, warranty or guaranty by Howard W. Sams & Co., Inc., as to the quality and suitability of such replacement part. The numbers of these parts have been compiled from information furnished to Howard W. Sams & Co., Inc., by the manufacturers of the particular type of replacement part listed." "Reproduction or use, without express permission, of editorial or pictorial content, in any manner, is prohibited. No patent liability is assumed with respect to the use of the information contained herein. Copyright 1954 by Howard W. Sams & Co., Inc., Indianapolis 5, Indiana, U. S. of America. Copyright under International Copyright Union. All rights reserved under Inter-American Copyright Union (1910) by Howard W. Sams & Co., Inc." Printed in U. S. of America

DATE 1-54 SET 227 FOLDER 10

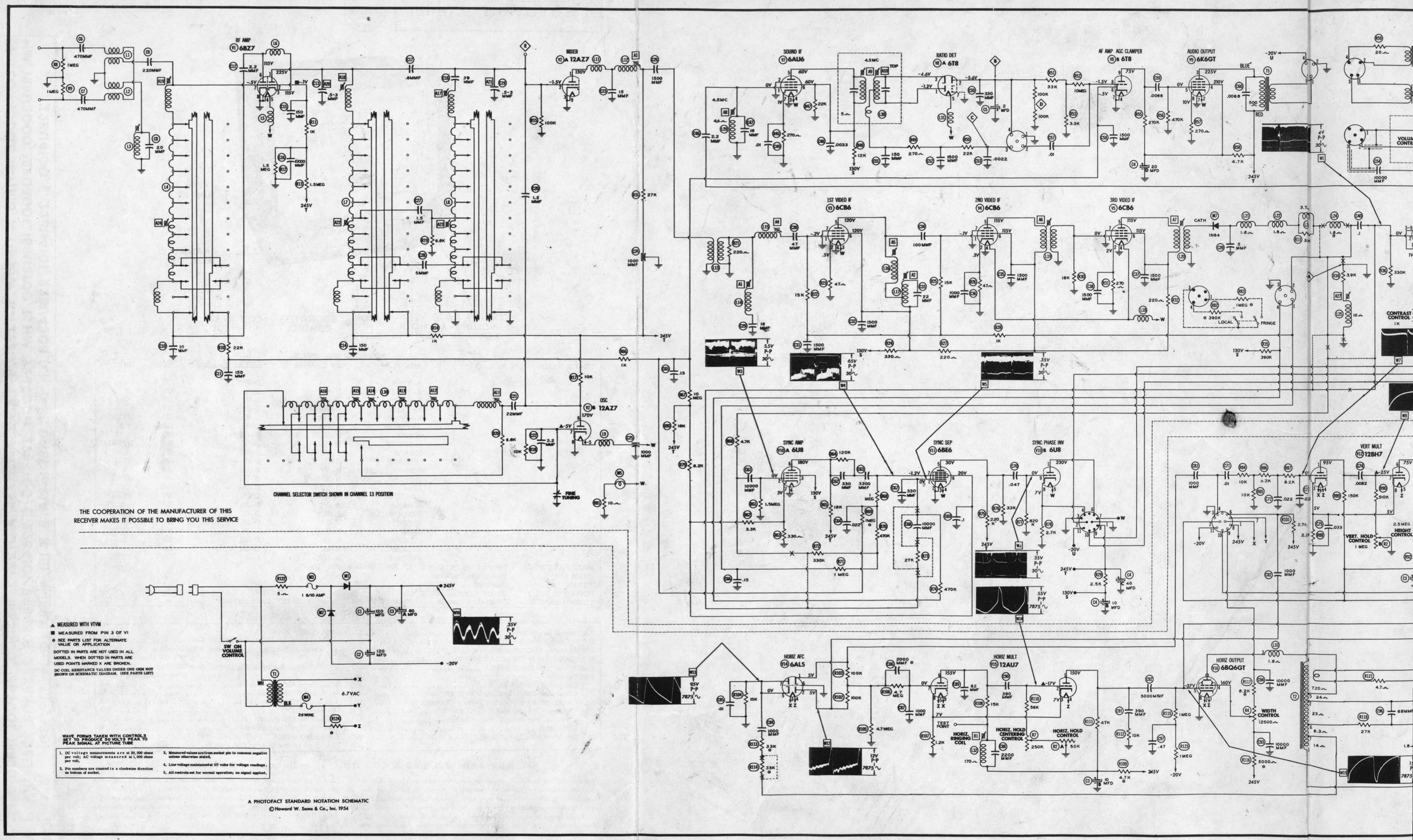

THE COOPERATION OF THE MANUFACTURER OF THIS RECEIVER MAKES IT POSSIBLE TO BRING YOU THIS SERVICE

▲ MEASURED WITH VTVM

■ MEASURED FROM PIN 3 OF V1

● SEE PARTS LIST FOR ALTERNATE VALUE OR APPLICATION

DOTTED IN PARTS ARE NOT USED IN ALL MODELS. WHEN DOTTED IN PARTS ARE USED POINTS MARKED X ARE BROKEN.

DC COIL RESISTANCE VALUES UNDER ONE OHM NOT SHOWN ON SCHEMATIC DIAGRAM. (SEE PARTS LIST)

WAVE FORMS TAKEN WITH CONTROLS SET TO PRODUCE 50 VOLTS PEAK TO PEAK SIGNAL AT PICTURE TUBE

1. DC voltage measurements are at 20,000 ohms per volt; AC voltage measured at 1,000 ohms per volt.
2. Pin numbers are counted in a clockwise direction on bottom of socket.
3. Measured values are from socket pin to common negative unless otherwise stated.
4. Line voltage maintained at 117 volts for voltage readings.
5. All controls set for normal operation; no signal applied.

A PHOTOFACT STANDARD NOTATION SCHEMATIC

©Howard W. Sams & Co., Inc. 1954

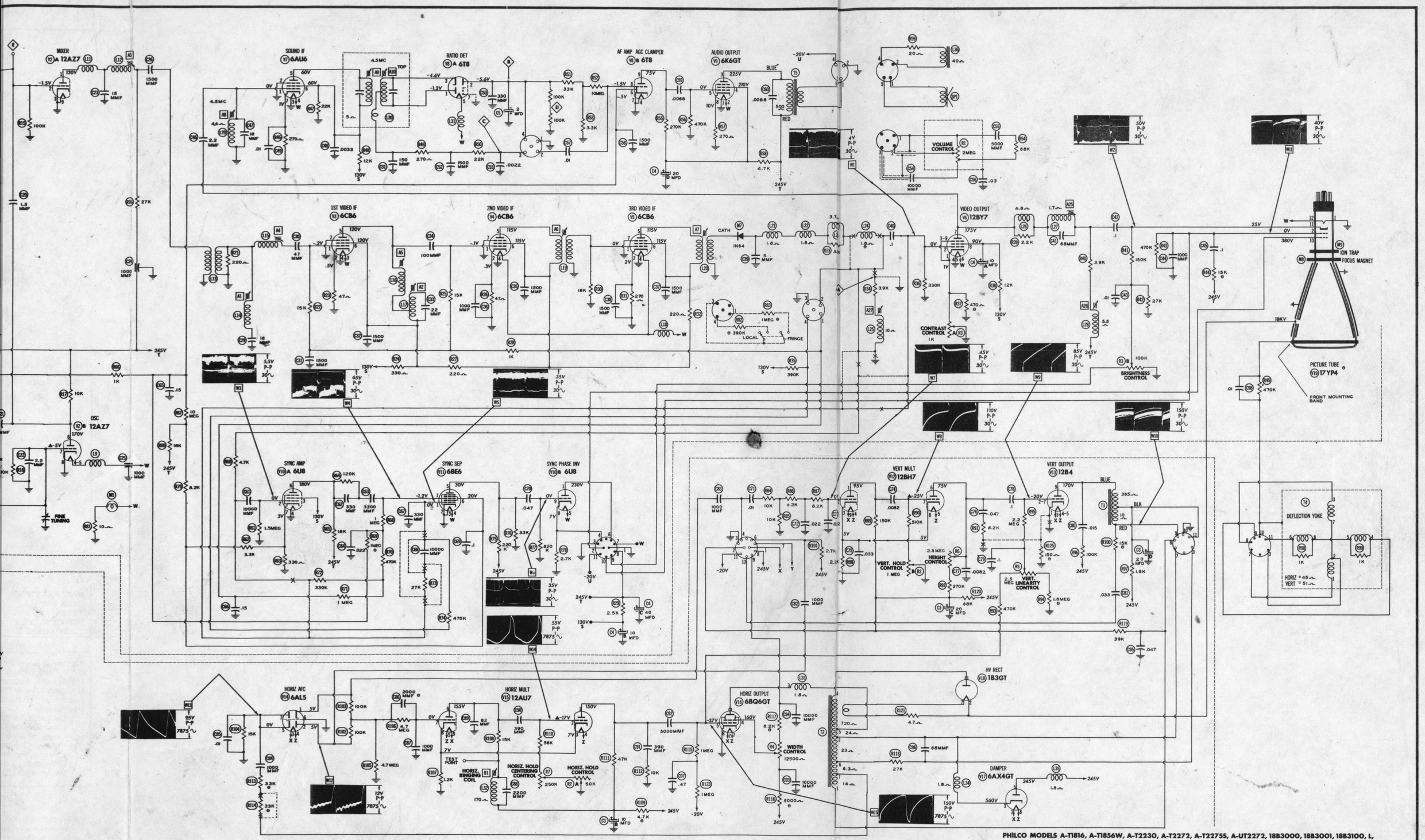

PHILCO MODELS A-T1816, A-T1856W, A-T2230, A-T2272, A-T2275S, A-UT2272, 18B3000, 18B3001, 18B3100, L, HM, 18BU3000, 18BU3001, 18BU3100, L, HM, 22B4000, 22B4100, L, 22B4101, 22B4301, 22B4303, 22BU4000, 22BU4100, L, 22BU4101, 22BU4303 (Ch. D-81, D-181, R-81A, B, R-181, R-181U) (Codes 129, 130)

PHILCO MODELS A-T1816, A-T1856W, A-T2230, A-T2272, A-T2275S, A-UT2272, 18B3000, 18B3001, 18B3100, L, HM, 18BU3000, 18BU3001, 18BU3100, L, HM, 22B4000, 22B4100, L, 22B4101, 22B4301, 22B4303, 22BU4000, 22BU4100, L, 22BU4101, 22BU4303 (Ch. D-81, D-181, R-81A, B, R-181, R-181U) (Codes 129, 130)

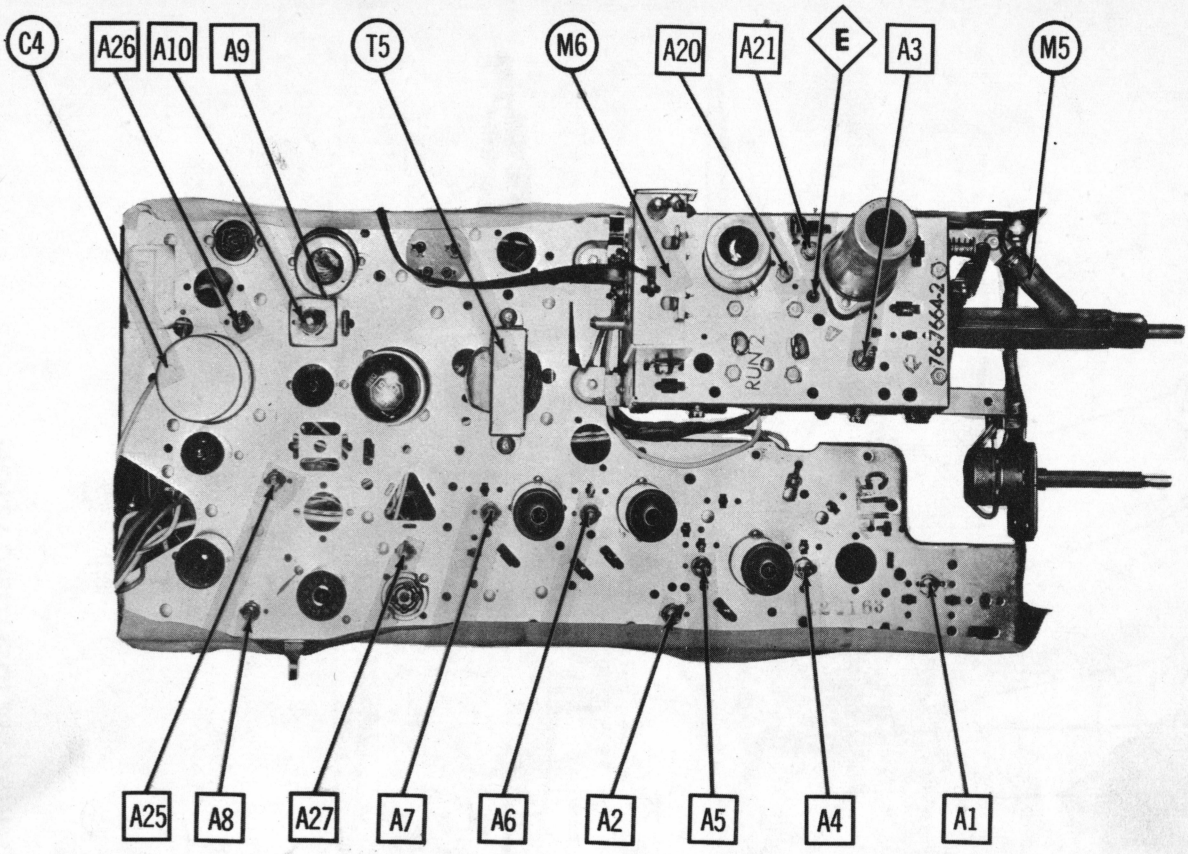

RF-IF CHASSIS-TOP VIEW

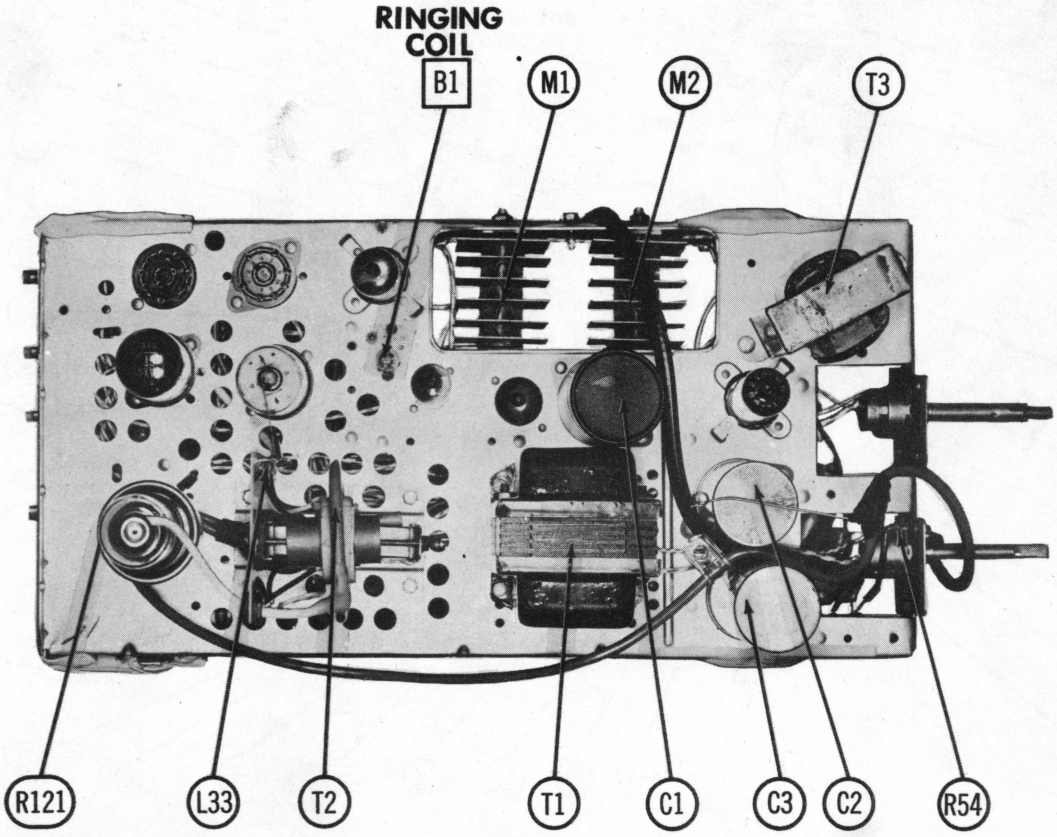

SWEEP CHASSIS-TOP VIEW

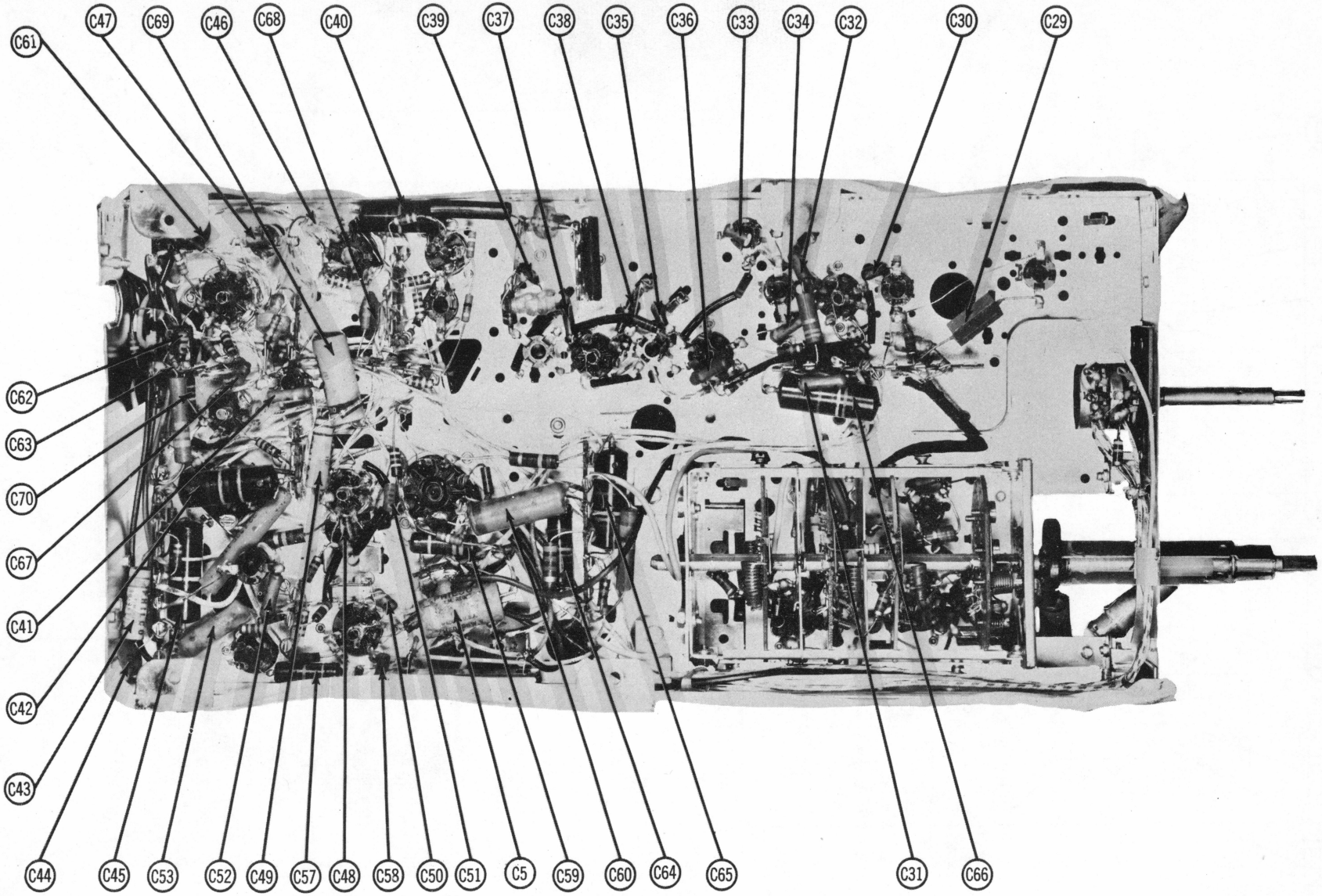

RF-IF CHASSIS-BOTTOM VIEW-CAPACITOR IDENTIFICATION

TUBE PLACEMENT CHART

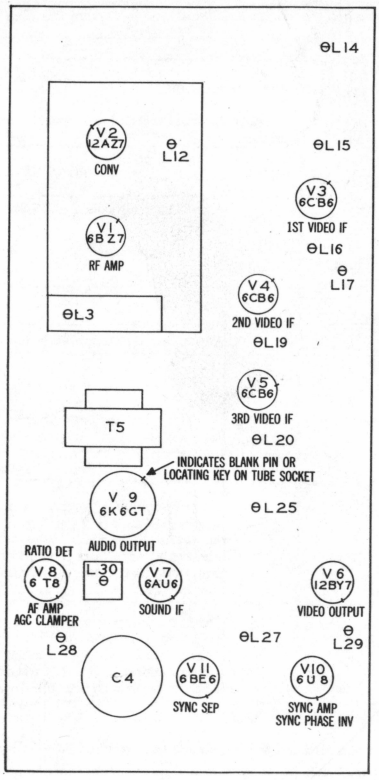

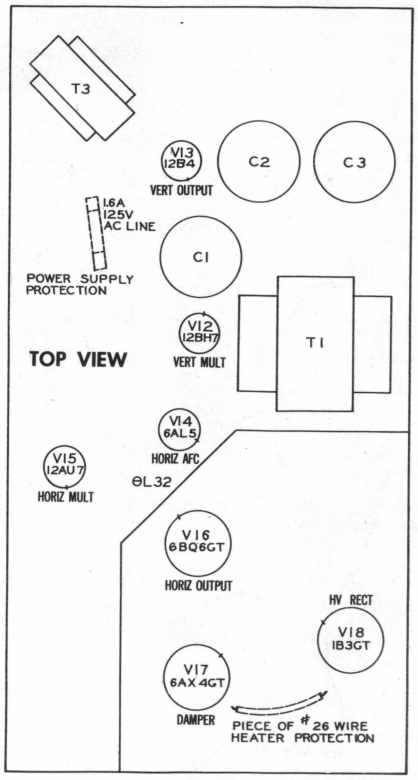

TUBE FAILURE CHECK CHART

The following chart lists tubes whose failures are most likely to produce the indicated symptoms. Refer to tube placement chart for location and type of tube.

POWER SUPPLY FAILURE
No raster, no sound - Selenium Rectifier (M1 & M2), Fuse (M3)

LOSS OF PICTURE OR SOUND
No pic, no sound, has raster - V2, V3, V4, V5, V6
No pic, no sound, has snow - V1, V2, V3
No pic, has sound, has raster - V6, V19
Has pic, no sound - V7, V8, V9
Overloaded picture - V8

SYNC FAILURE
No vert. sync - V10, V12, V13
No horiz. sync - V10, V14, V15
No vert. or horiz. sync - V10, V11

SWEEP FAILURE
No raster, has sound - V15, V16, V17, V18, V19
No vertical deflection - V12, V13
Poor vert. linearity or foldover - V12, V13
Poor horiz. linearity or foldover - V15, V16, V17
Narrow picture - V15, V16, V17, V18, M1, M2
Vert. off freq. - V10, V12, V13
Horiz. off freq. - V10, V14, V15

ALIGNMENT INSTRUCTIONS

ALIGNMENT INSTRUCTIONS—READ CAREFULLY BEFORE ATTEMPTING ALIGNMENT

The high voltage lead should be securely taped and kept away from the chassis. Do not remove the horizontal oscillator to disable the high voltage. Use an isolation transformer to protect the test equipment.

VIDEO IF ALIGNMENT

Set the brightness and contrast controls at maximum counter clockwise rotation.
Connect the negative lead of a 3V bias supply to Pin 1 of the "video test" socket. Connect the positive lead to chassis.
The IF shield (under chassis) must be in place during alignment.
Connect the synchronized sweep voltage from the sweep generator to the horizontal input of the oscilloscope for horizontal deflection.
The sweep generator output lead should be terminated with its characteristic impedance, usually 50 ohms.

	DUMMY ANTENNA	SWEEP GENERATOR COUPLING	SWEEP GENERATOR FREQUENCY	MARKER GENERATOR FREQUENCY	CHANNEL	CONNECT SCOPE	ADJUST	REMARKS
1.	Direct	High side to an un-grounded tube shield floating over converter tube (V2). Low side to chassis.	Not used	28.1MC (400∿Mod)	4	Vert. Amp. thru 2200Ω to point (A). (Pin 2 of video test jack). Low side to chassis.	A1	Adjust for MINIMUM 400∿ indication on scope.
2.	"	"	"	22.1MC	"	"	A2	"
3.	"	"	"	24.0MC	"	"	A3	Adjust for maximum 400∿ indication on scope.
4.	"	"	"	25.7MC	"	"	A4	"
5.	"	"	"	23.6MC	"	"	A5	"
6.	"	"	"	26.4MC	"	"	A6	"
7.	"	"	"	24.5MC	"	"	A7	"
8.	Two 120Ω Carbon Resistors	Across antenna ter-minals with 120∿ in each lead	69MC (10MC Swp)	67.25MC	"	"		Loosely couple a marker generator to the mixer grid test point on top of tuner. Set generator to 26.6MC. Adjust the fine tuning control to zero beat the two markers as observed on the scope. Remove the separate marker generator.
9.	"	"	"	67.25MC 70.25MC	"	"		Check for response curve as in Fig. 1. If necessary, retouch A3, A4, A5, A6 and A7 for desired response. A4 and A6 affects the video carrier level. A7 affects flat top re-sponse and A5 affects low frequency response.

SOUND IF ALIGNMENT USING AM SIGNAL GENERATOR AND VTVM

Remove 6CB6 (V3) from its socket.
Connect two matched 100KΩ (±1%) resistors in series from point (B) to chassis. The junction of these two resistors is alignment point (D) as shown on the schematic.

	DUMMY ANTENNA	SIGNAL GENERATOR COUPLING	SIGNAL GENERATOR FREQUENCY	CHANNEL	CONNECT VTVM	ADJUST	REMARKS
10.	2200Ω Carbon Resistor	High side to point (A) Low side to chassis.	4.5MC (Unmod.)	Any non-interfer-ing channel	DC probe to point (B) Common to chassis.	A8, A9	Adjust for maximum deflection. Attenuate generator output to maintain not more than 10 volts at VTVM.
11.	"	"	"	"	DC probe to point (C) Common to point (D).	A10	Adjust for zero reading. A positive and negative read-ing will be obtained on either side of the correct setting.

SOUND IF ALIGNMENT USING FM SIGNAL GENERATOR AND OSCILLOSCOPE

Remove 6CB6 (V3) from its socket.
Use frequency modulated signal with 60∿ modulation and 450KC sweep. Use 120∿ sawtooth voltage in scope for horizontal deflection.

	DUMMY ANTENNA	SWEEP GENERATOR COUPLING	SWEEP GENERATOR FREQUENCY	MARKER GENERATOR FREQUENCY	CHANNEL	CONNECT SCOPE	ADJUST	REMARKS
10.	2200Ω carbon resistors	High side to point (A). Low side to chassis.	4.5MC (450KC Swp)	4.5MC	Any non-interfering channel	Vert. amp. to point (B). Low side to chassis.	A8, A9	Disconnect stabilizer capacitor C5. Adjust for curve of maximum amplitude and symmetry as in Fig. 2.
11.	"	"	"	"	"	Vert. amp. to point (C). Low side to chassis.	A10	Reconnect stabilizer capacitor C5. Adjust so that 4.5MC occurs at center of crossover lines as in Fig. 3. Slightly retouch A9 for maximum amplitude and straightness of crossover lines.

OSCILLATOR ALIGNMENT

Disconnect AGC (white) lead to tuner at terminal strip and connect the negative lead of a 1.5volt battery to the white lead. Connect the positive lead to chassis. If regeneration occurs, bias may be increased to 4 or 5 volts.
Couple the 26.6MC output of a second generator to the first video IF amplifier tube, V3, by removing the tube shield and attaching the output leads of the generator to the ends of a few turns of wire wrapped around the tube.
The output is set at 26.6MC throughout the entire oscillator alignment.
Preset the fine tuning for all adjustments by placing the stop on the fine tuning cam between the channel 7 and 8 holes on the tuner front plate.
Connect the synchronized sweep voltage from the sweep generator to the horizontal input of the ocilloscope for horizontal deflection.
The sweep generator output lead should be terminated with its characteristic impedance, usually 50 ohms.
Set the fine tuning control to the mid-postion of its range.

	DUMMY ANTENNA	SWEEP GENERATOR COUPLING	SWEEP GENERATOR FREQUENCY	MARKER GENERATOR FREQUENCY	CHANNEL	CONNECT SCOPE	ADJUST	REMARKS
12.	Two 120Ω carbon resistors	Across antenna terminals with 120Ω in each lead.	Not used	211.25MC 199.25MC 187.25MC	13 11 9	Vert. amp thru 15KΩ to point (A). Low side to chassis.	A11 A12 A13	Adjust for zero beat with 26.6MC IF signal as indicated on scope.
13.	Repeat step 12 until channels 13, 11, and 9 are within 500KC of their correct frequencies.							
14.	Two 120Ω carbon resistors	Across antenna terminals with 120Ω in each lead.	Not used	175.25MC 83.25MC 67.25MC	7 6 4	Vert. amp thru 15KΩ to point (A). Low side to chassis.	A14 A15 A16	Adjust for zero beat with 26.6MC IF signal as indicated on scope.

ALIGNMENT INSTRUCTIONS (cont)

RF AND MIXER ALIGNMENT

Leave bias connected as under oscillator alignment.
Disconnect the tuner coupling link at the IF terminal strip (near V3) and solder a 68Ω carbon resistor to the open end of the link.

	DUMMY ANTENNA	SWEEP GENERATOR COUPLING	SWEEP GENERATOR FREQUENCY	MARKER GENERATOR FREQUENCY	CHANNEL	CONNECT SCOPE	ADJUST	REMARKS
15.	Two 120Ω Carbon Resistors	Across antenna terminals with 120Ω in each lead.	213MC (10MC Swp)	213MC	13	Vert. Amp. thru 100KΩ to point ⟨E⟩. Low side to chassis.	A17, A18 A19	Adjust A17 and A18 for a symmetrical approximately centered bandpass. Detune A18 counter clockwise until a single peak appears. Adjust A17 until peak falls at 213MC. Adjust A19 for maximum curve height and symmetry of peak. Readjust A27 and A28 for symmetrical response as in Fig. 4.
16.	"	"	177MC (10MC Swp)	177MC	7	"	A20, A21	Check for response as indicated by dotted line curves in Figs. 5A and 5B. If response is not symmetrical and centered about 177 MC, adjust A20 and A21 for mirror image of original response curve. This adjustment over compensates to allow for the effect of channel 13 adjustment on channel 7. Repeat adjustment A20 and A21 until centered and symmetrical response curves are obtained on channels 13 and 7.
17.	"	"	85MC (10MC Swp)	85MC	6	"	A22, A23, A24	Adjust A22 and A23 for a symmetrical approximately centered band pass. Detune A23 counter clockwise until a single peak appears. Adjust A22 until peak falls at 85MC. Adjust A24 for maximum curve height and symmetry. Readjust A22 and A23 for symmetrical response as in Fig. 4. Remove 68Ω resistor and reconnect coupling link to 1st IF.

4.5MC TRAP ALIGNMENT

Turn the set on and tune in a TV test pattern.
Adjust A25 for maximum vertical wedge definition.

VIDEO PEAKING COIL ADJUSTMENT

In case of excessive overshoot or smear on some stations it may be necessary to adjust A26 and A27. Alignment of the tuner and IF portions of the receiver must be correct before this adjustment is made. Counter clockwise adjustment reduces picture smear and increases trailing whites and clockwise adjustment reduces trailing whites and overshoot. Proper adjustment point is the point of minimum smear and trailing whites.

UHF TUNER ADAPTER ALIGNMENT

The UHF tuner adapter has been properly aligned at the factory. If the unit requires major repair or alignment it should be returned to the factory.
Replacing the tube may detune the tuner. If this occurs try several tubes until a satisfactory substitute is found.

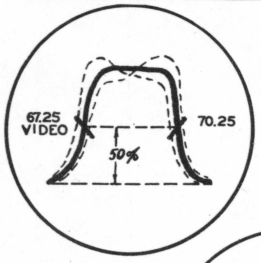

FIG 1

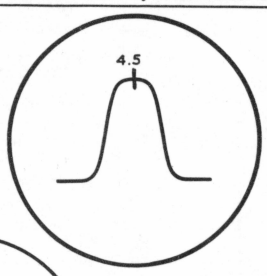

FIG.2

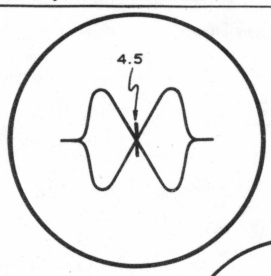

FIG.3

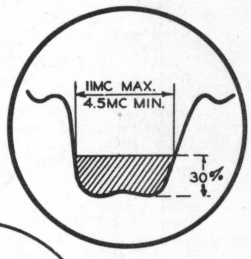

FIG. 4

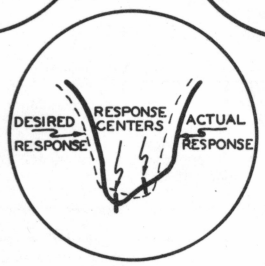

FIG 5A

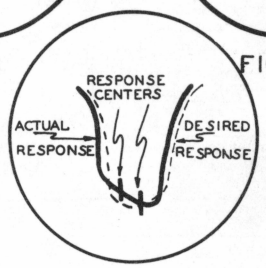

FIG 5B

PHILCO MODELS A-T1816, A-T1856W, A-T2230, A-T2272, A-T2275S, A-UT2272, 18B3000, 18B3001, 18B3100, L, HM, 18BU3000, 18BU3001, 18BU3100, L, HM, 22B4000, 22B4100, L, 22B4101, 22B4301, 22B4303, 22BU4000, 22BU4100, L, 22BU4101, 22BU4303 (Ch. D-81, D-181, R-81A, B, R-181, R-181U) (Codes 129, 130)

RESISTANCE MEASUREMENTS

Item	Tube	Pin 1	Pin 2	Pin 3	Pin 4	Pin 5	Pin 6	Pin 7	Pin 8	Pin 9
V 1	6BZ7	†1KΩ	1.5Meg	INF	0Ω	.1Ω	INF	2Meg	0Ω	0Ω
V 2	12AZ7	†27KΩ	100KΩ	0Ω	.1Ω	.1Ω	†10KΩ	10KΩ	0Ω	0Ω
V 3	6CB6	1.5Meg	47Ω	.1Ω	0Ω	†2.8KΩ	†2.8KΩ	0Ω		
V 4	6CB6	1.5Meg	47Ω	.1Ω	0Ω	†3KΩ	†3KΩ	0Ω		
V 5	6CB6	.4Ω	270Ω	.1Ω	0Ω	†3.2KΩ	†3.2KΩ	0Ω		
V 6	12BY7	400Ω	330KΩ	†0Ω	0Ω	0Ω	.1Ω	†3.9KΩ	†14.5KΩ	400Ω
V 7	6AU6	4.4Ω	0Ω	0Ω	.1Ω	†14.5KΩ	†14.5KΩ	270Ω		
V 8	6T8	INF	36KΩ	INF	0Ω	.1Ω	1.5Meg	0Ω	10Meg	†275KΩ
V 9	6K6GT	10Ω	.1Ω	†500Ω	†4.7KΩ	470KΩ	†0Ω	0Ω	270Ω	
V 10	6U8	†2.7KΩ	1.5Meg	†2.5KΩ	0Ω	.1Ω	†18KΩ	330Ω	2.7KΩ	820KΩ
V 11	6BE6	†860KΩ	0Ω	0Ω	.1Ω	†220KΩ	†26KΩ	1.8Meg		
V 12	12BH7	¶190KΩ	26.5KΩ	2.2KΩ	.1Ω	.1Ω	¶1.8Meg	780KΩ	2.2KΩ	0Ω
V 13	12B4	0Ω	4.5Meg	0Ω	.1Ω	.1Ω	INF	4.5Meg	INF	†2.1KΩ
V 14	6AL5	4.8Meg	4.8Meg	0Ω	.1Ω	15KΩ	INF	15KΩ		
V 15	12AU7	†52KΩ	140KΩ	1.2KΩ	.1Ω	.1Ω	†20KΩ	9.4Meg	1.2KΩ	0Ω
V 16	6BQ6GT	1.6Meg	0Ω	INF	†5.5KΩ	1.5Meg	900KΩ	.1Ω	0Ω	TOP CAP ¶25Ω
V 17	6AX4GT	¶18Ω	INF	100KΩ	INF	†1.8Ω	.1Ω	0Ω	.1Ω	
V 18	1B3GT		PINS	1 - 8	HAVE	INF	RESISTANCE			TOP CAP ¶745Ω
V 19	17YP4	0Ω	470KΩ	PIN 10 ¶39KΩ	PIN 11 †150KΩ	PIN 12 .1Ω				

¶ MEASURED FROM PIN 3 OF V17
† MEASURED FROM OUTPUT OF M1

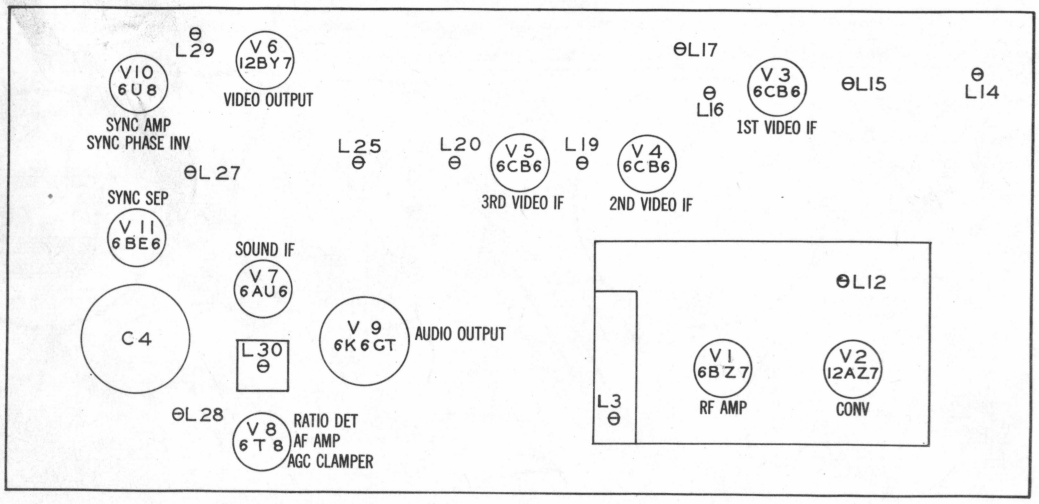

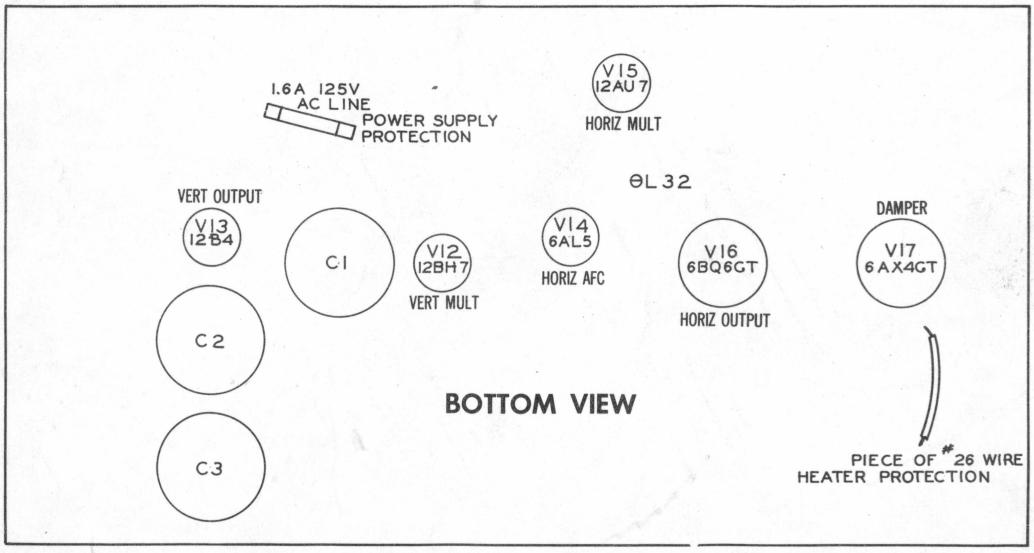

TUBE PLACEMENT CHART

PHILCO MODELS A-T1816, A-T1856W, A-T2230, A-T2272, A-T2275, A-UT2272, 18B3000, 18B3001, 18B3100, L, HM, 18BU3000, 18BU3001, 18BU3100, L, HM, 22B4000, 22B4100, L, 22B4101, 22B4301, 22B4303, 22BU4000, 22BU4100, L, 22BU4101, 22BU4303 (Ch. D-81, D-181, R-81A, B, R-181, R-181U) (Codes 129, 130)

RF-IF CHASSIS-BOTTOM VIEW-RESISTOR IDENTIFICATION

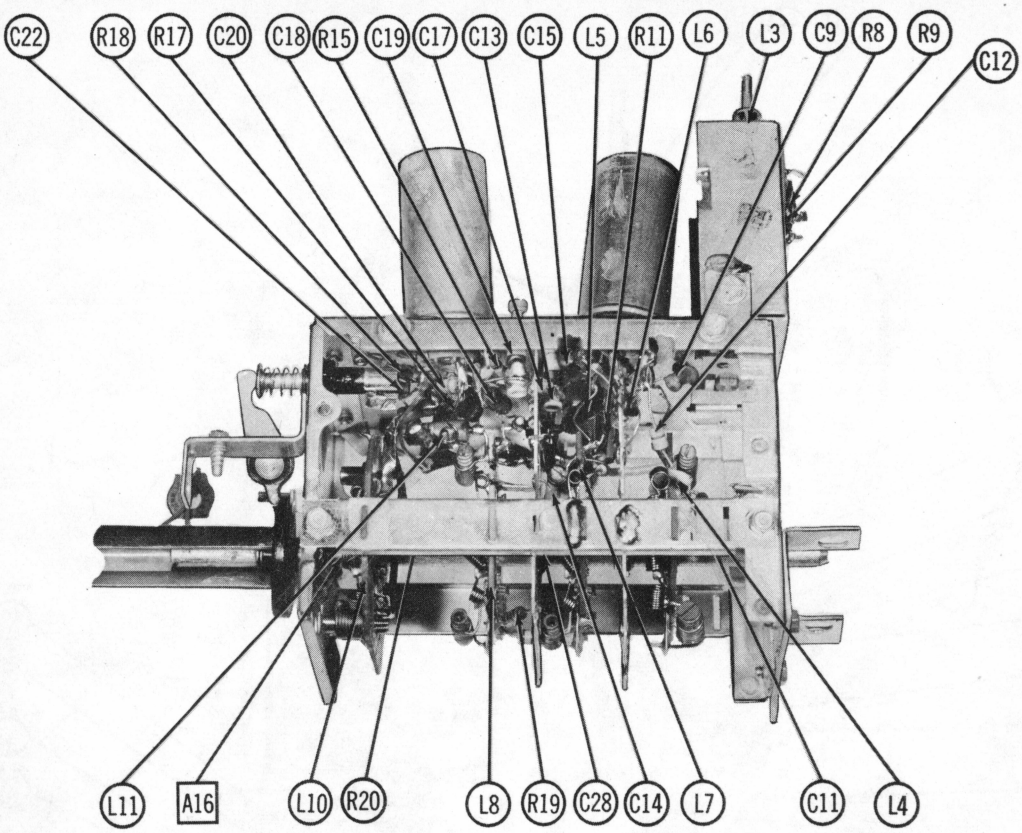

RF TUNER-RIGHT SIDE

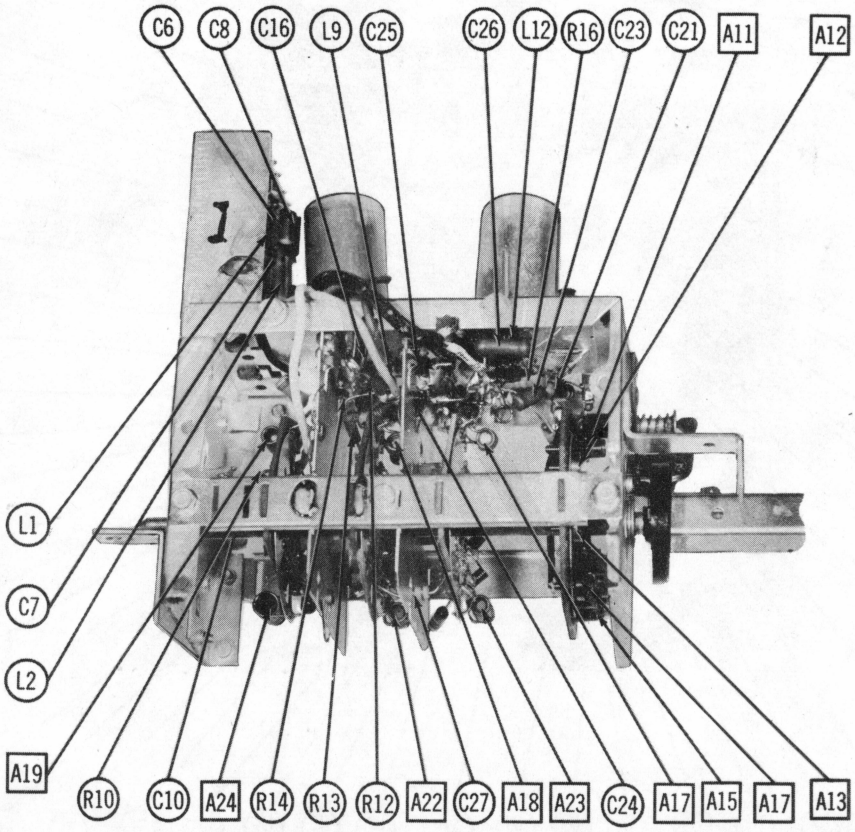

RF TUNER-LEFT SIDE

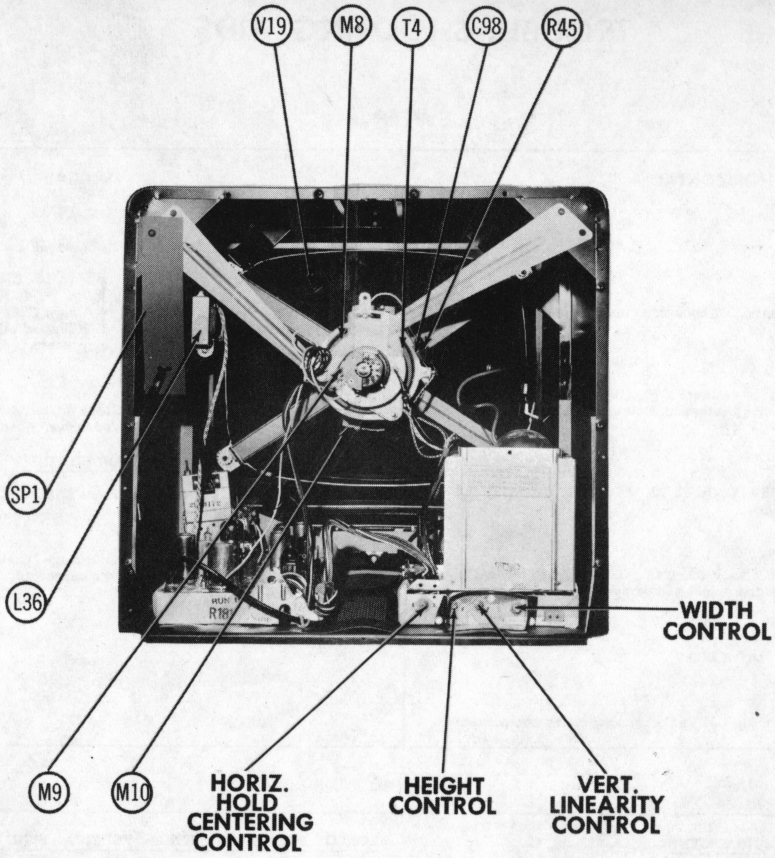

CABINET—REAR VIEW

HORIZONTAL SWEEP CIRCUIT ADJUSTMENTS

Turn the set on and tune in a TV station preferably a test pattern.

Reduce the picture width until approximately one inch of blank screen appears on each side of the picture.

Increase the brightness control setting until the blanking time becomes visible as indicated by a dark bar at each side of the picture.

Connect a .1MFD capacitor from the test point at junction of R108 and L32, to chassis.

Set the horizontal hold control at the center of its range.

Adjust the horizontal hold centering control until the picture is centered between the two blanking bars.

Remove the .1MFD capacitor.

Adjust the horizontal ringing coil slug (B1) until the picture is again centered between the two blanking bars.

Rotate the horizontal hold control through its range.

Check the number of diagonal bars on either side of the pull-in range of the horizontal hold.

There should be 1 or 2 bars present.

If proper pull-in is not obtained, repeat the above procedure.

TROUBLE SHOOTING AIDS

SWEEP

HORIZONTAL

LOSS OF SWEEP

See "Loss of High Voltage".

INSUFFICIENT SWEEP

Check by substitution V15, V16 and V17. Check adjustment of the width control. Check waveform W15.

If Satisfactory	If Unsatisfactory
Check T2, T4A, C93, C95, width control and other associated circuit components.	Check C90, C91, C92, R108, R111 and other associated components.

DRIVE LINES

Check by substitution V15, V16 and V17. Check T2, T4A, C91, C92, C95 and other associated circuit components.

COMPRESSED LEFT SIDE

Check by substitution V16 and V17. Check T2, T4A, C95, C93 and other components associated with the horizontal output and damper stages.

FOLDS

Follow procedure outlined under "Drive Lines".

XMAS TREE EFFECT

Substitute V15. Check C88, C89, C90, L32 and other associated components.

VERTICAL

LOSS OF SWEEP

Check by substitution V12 and V13. Check waveform W9.

If Satisfactory	If Unsatisfactory
Check R97, T3, T4B and other associated circuit components.	Check C76, C77, C78, C79, R92, R95, and other associated components.

INSUFFICIENT SWEEP

Check by substitution V12 and V13. Check adjustment of height and vertical linearity controls. Proceed as outlined under "Loss of Sweep".

COMPRESSED AT BOTTOM EXPANDED TOP

Check by substitution V12 and V13. Check C78 and C76 for leakage.

FOLDS

Substitute V12 and V13. Check C78 for leakage. Check R95 for change of value. Check T3 and other associated components.

SYNC

LOSS OF HORIZONTAL AND VERTICAL SYNC

Check by substitution V10 and V11. Check associated circuit components especially C63, C70, C61, R65 and R75.

LOSS OF VERTICAL SYNC - HORIZONTAL SYNC SATISFACTORY

Check by substiution V10, V11 and V12. Check waveform W7.

If Satisfactory	If Unsatisfactory
Check components associated with V12 especially C74 and C75.	Check components associated with V11 and V12 especially the integrator network.

LOSS OF HORIZONTAL SYNC - VERTICAL SYNC SATISFACTORY

Check by substitution V14 and V15. Check associated circuit components.

HORIZONTAL BENDING

Check by substitution V14, V15 and V16. Check C87 for leakage. Check AFC network for component failure or change of value.

VIDEO

LOSS OF VIDEO

Check C42, R41, picture tube and associated components.

SOUND BARS (4. 5MC BEAT)

Check local oscillator adjustment. Check adjustment of 4. 5MC trap (A25). Check video IF alignment.

NEGATIVE PIX

Substitute V6. Check video detector crystal and assembly. Check AGC network for component failure. Check picture tube and associated components.

POOR CONTRAST

Substitute V6. Check video detector crystal and assembly. Check picture tube and associated components.

SMEAR

Substitute V6. Check video detector assembly. Check C40, C42, R36, R38, R40, R41, L26, L28, picture tube and other associated circuit components for change of value or failure.

WIDE BLACK BAR ACROSS PIX

Check V1, V2, V3, V4, V5 and V6 for heater to cathode leakage.

AUDIO

WEAK OR NO SOUND

Check by substitution V7, V8 and V9. Check stages of V8B and V9 using an audio signal generator. Apply signal across R52.

If Satisfactory	If Unsatisfactory
Check ratio detector and audio IF alignment and components.	Check components associated with V8B and V9 especially C59, and R58.

BUZZ

Adjust ratio detector secondary (A10) for minimum buzz. If buzz is still objectionable, substitute V8 and realign audio (A8, A9, and A10), follow procedure outlined in the alignment section.

DISTORTED

Check by substitution V8, V9 and V7. Follow procedure outlined under "Weak or No Sound".

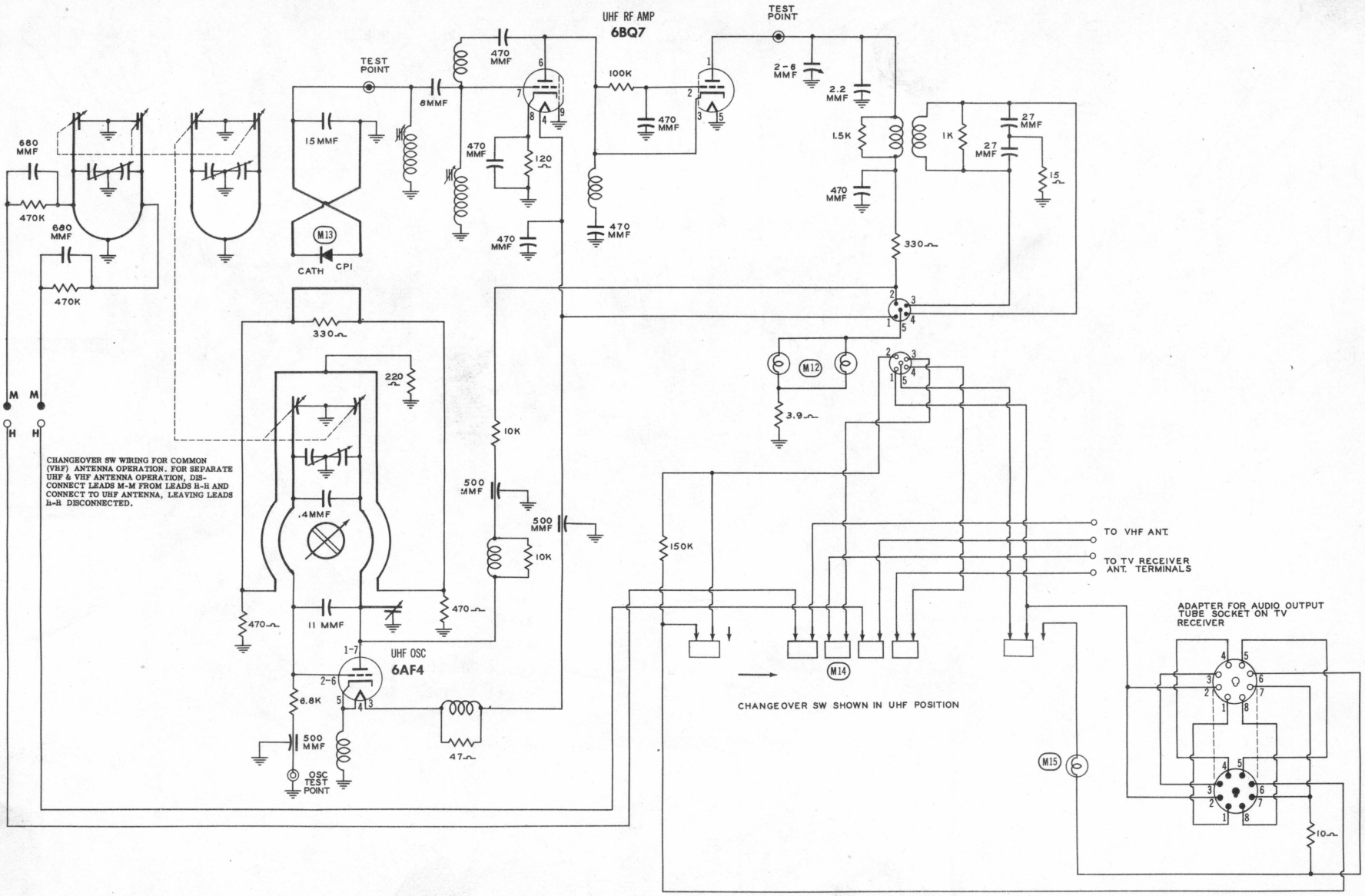

A PHOTOFACT STANDARD NOTATION SCHEMATIC

©Howard W. Sams & Co., Inc. 1954

UHF TUNER UT21D

UHF TUNER SCHEMATIC

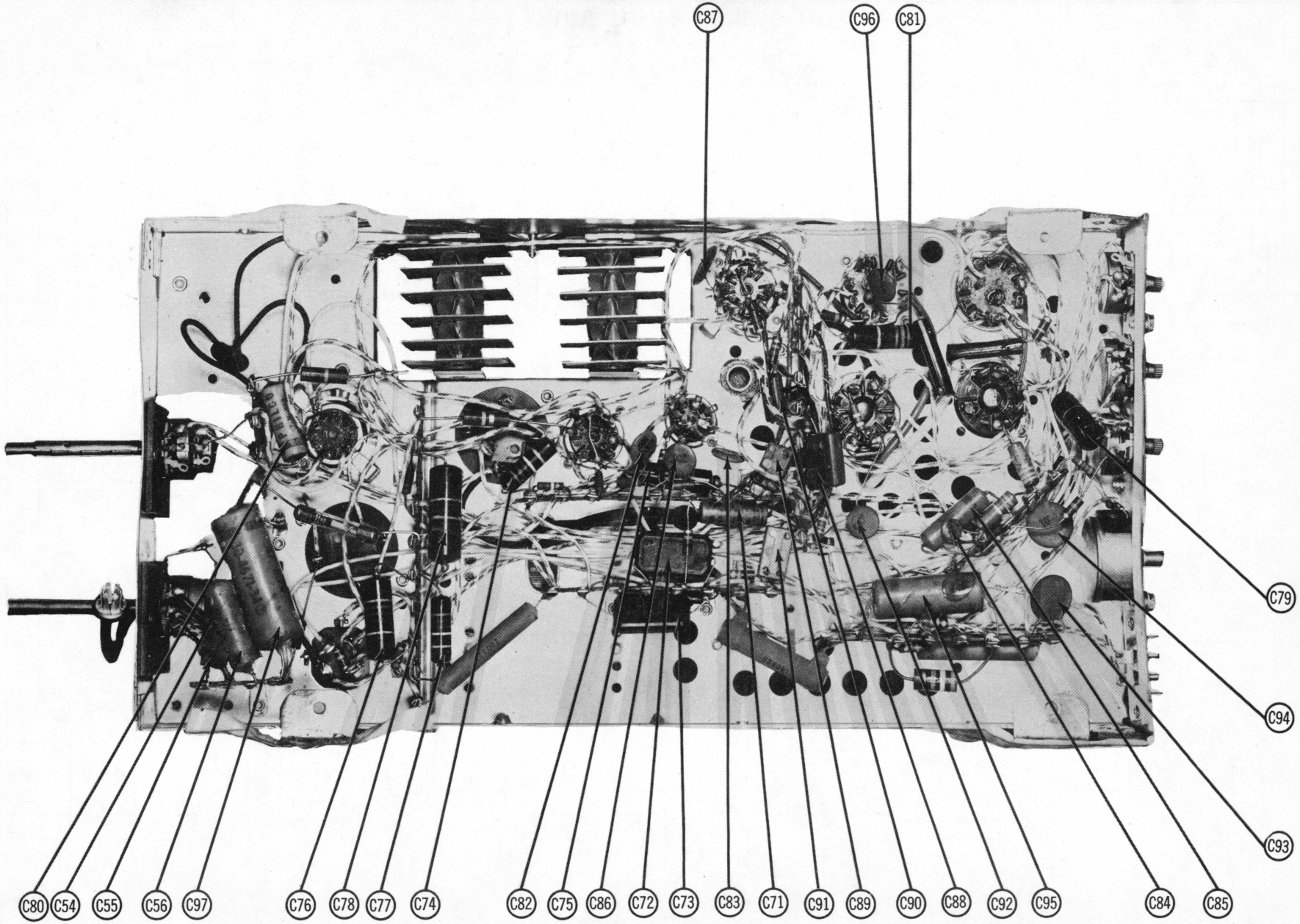

SWEEP CHASSIS BOTTOM VIEW-CAPACITOR IDENTIFICATION

PARTS LIST AND DESCRIPTIONS

TUBES (SYLVANIA, GENERAL ELECTRIC or Equivalent)

ITEM No.	USE	REPLACEMENT DATA: PHILCO PART No.	REPLACEMENT DATA: STANDARD REPLACEMENT	RTMA BASE TYPE	NOTES
V1	RF Amplifier	6BZ7	6BZ7	9AJ	
V2	Converter	12AZ7	12AZ7	9A	
V3	1st. Video IF Amp.	6CB6	6CB6	7CM	
V4	2nd. Video IF Amp.	6CB6	6CB6	7CM	
V5	3rd. Video IF Amp.	6CB6	6CB6	7CM	
V6	Video Output	12BY7	12BY7	9BF	
V7	Sound IF Amp.	6AU6	6AU6	7BK	
V8	Ratio Detector-AF Amplifier - AGC Clamper	6T8	6T8	9E	
V9	Audio Output	6K6GT	6K6GT	7S	
V10	Sync Amplifier-Sync Phase Inv.	6U8	6U8	9AE	
V11	Sync Separator	6BE6	6BE6	7CH	
V12	Vert. Mult.	12BH7	12BH7	9A	
V13	Vert. Output	12B4	12B4	9AG	
V14	Horiz. AFC	6AL5	6AL5	6BT	
V15	Horiz. Mult.	12AU7	12AU7	9A	
V16	Horiz. Output	6BQ6GT	6BQ6GT	6AM	
V17	Damper	6AX4GT	6AX4GT	4CG	
V18	HV Rectifier	1B3GT	1B3GT	3C	

CATHODE-RAY TUBE

ITEM No.	REPLACEMENT DATA: PHILCO PART No.	REPLACEMENT DATA: SYLVANIA PART No.	REPLACEMENT DATA: GENERAL ELECTRIC PART No.	RTMA BASE TYPE	NOTES
V19A	17YP4	17YP4	17YP4	12D	
			17VP4 / 17LP4	12D	
B	21ZP4	21ZP4		12D	
C	21ZP4A	21ZP4A		12D	
D	21EP4A	21EP4A	21EP4A	12D	

CAPACITORS

Capacity values given in the rating column are in mfd. for Electrolytic and Paper Capacitors, and in mmfd. for Mica and Ceramic Capacitors.

ITEM No.	RATING: CAP.	RATING: VOLT	REPLACEMENT DATA: PHILCO PART No.	AEROVOX PART No.	CENTRALAB PART No.	CORNELL-DUBILIER PART No.	ERIE PART No.	MALLORY PART No.	SPRAGUE PART No.	NOTES
C1	120	150	30-2568-51	AFHS1-69		XA007		FP140	TVL-1540	
C2	120	150	30-2568-51	AFHS1-69		XA007		FP140	TVL-1540	
C3A	■80	300	30-2584-35	AFH4-95		D114		FP333.8		
B	10	300		PRS450/80				TC83	TVL-4801	
C	▲20	475								
D	▲20	300								
C4A	10	300	30-2570-57	AFH4-18		D111		FP343.6	TVL-4578	
B	▲10	300						TC62		
C	▲40	300								
D	■20	300								
C5	2	50	30-2417-7	E26E6		BBR-2-50T		TC302	TVA-1301	
C6	470		30-1225-18	SI470	D6-471		GP2K-471	UC-5347	5GA-T47	
C7	470		30-1225-18	SI470	D6-471		GP2K-471	UC-5347	5GA-T47	
C8	20		62-020309011	SI20NP0	TCZ-20		NP0K-200	ZT-542	5TCC-Q2	
C9	220		62-122001001	SI220	D6-221		GP2K-221	UC-5322	5GA-T22	
C10	10		62-010409011							
C11	150		62-115001011	SI150	D6-151	TM5T15	GP2K-151	UC-5315	5GA-T15	
C12	2.2		30-1221-6	SI2.2NP0	TCZ-2.2		NP0K-2R2		5TCCB-V22	
C13	.5-3		31-6520-3		829-3			CT565A		
C14	150		62-115001011	SI150	D6-151	TM5T15	GP2K-151	UC-5315	5GA-T15	
C15	150		62-115001011	SI150	D6-151	TM5T15	GP2K-151	UC-5315	5GA-T15	
C16	10000		30-1238-2	BPD-01	DD-103	TM5S1	811-01	DC-511	5HK-S1	
C17	.6		30-1221-15							
C18	39		62-039409011							
C19	.5-3		31-6520-3		829-3			CT565A		
C20	1.5		30-1221-8	SI1.5NP0	TCZ-1.5		NP0K-1R5		5TCCB-V15	
C21	22		62-022009001							
C22	2.2		30-1224-66							
C23	15		62-015409011	SI15	D6-150		GP1K-150	UC-5415	5GA-Q15	
C24	1000		30-1245-1	EF-001	MFT-1000				503C-D1	
C25	1000		30-1245-1	EF-001	MFT-1000				503C-D1	
C26	1500			SI1500	D6-152	TM5D15	GP2L-152	UC-5215	5HK-D15	
C27	1.5		30-1221-8	SI1.5NP0	TCZ-1.5		NP0K-1R5		5TCCB-V15	
C28	5		30-1221-13	SI5NP0	TCZ-4.7		NP0K-050	ZT-555	5TCCB-V47	
C29	18	500	62-018400021							
C30	47		60-00475420	SI47	D6-470		GP1K-470	UC-5447	5GA-Q47	
C31	1500			SI1500	D6-152	TM5D15	GP2L-152	UC-5215	5HK-D15	
C32	1500			SI1500	D6-152	TM5D15	GP2L-152	UC-5215	5HK-D15	
C33	22		62-022009001							
C34	100		62-110409001	SI100	D6-101	TM5T1	GP1K-101	UC-531	5GA-T1	
C35	1500			SI1500	D6-152	TM5D15	GP2L-152	UC-5215	5HK-D15	
C36	1000			SI1000	D6-102	TM5D1	GP2L-102	UC-521	5HK-D1	
C37	1500			SI1500	D6-152	TM5D15	GP2L-152	UC-5215	5HK-D15	
C38	1500			SI1500	D6-152	TM5D15	GP2L-152	UC-5215	5HK-D15	
C39	5		30-1224-28	SI5NP0	TCZ-4.7		NP0K-050	ZT-555	5TCCB-V47	
C40	.1	200		P288-1	DF-104	PJ2P1		PT401	2TM-P1	
C41	68		62-068409011							
C42	.1	400		P488-1	DF-104	PTE4P1		PT401	4TM-P1	
C43	.01	400		P488-01	D6-103	PTE4S1	GP2-333-103	PT411	4TM-S1	
C44	1000			BPD-001	DD-102	TM5D1	801-001	DC-521	5HK-D1	
C45	.1	400		P488-1	DF-104	PTE4P1		PT401	4TM-P1	
C46	2.2		30-1221-6	SI2.2NP0	TCZ-2.2		NP0K-2R2		5TCCB-V22	
C47	18		62-018400021							
C48	.0033	400		P688 - 0033	D6-332	PTE6D33	GP2-333-332	PT6233	5HK-D33	
C49	.01	400		P488-01	D6-103	PTE4S1	GP2-333-103	PT411	4TM-S1	
C50	330		62-133001001	SI330	D6-331		GP2K-331	UC-5333	5GA-T33	
C51	150		62-115001011	SI150	D6-151	TM5T15	GP2K-151	UC-5315	5GA-T15	
C52	1500			SI1500	D6-152	TM5D15	GP2L-152	UC-5215	5HK-D15	
C53	.0022	400		P688-0022	D6-222	PTE6D22	GP2-333-202	PT6222	6TM-D22	
C54	10000			BPD-01	DD-103	TM5S1	811-01	DC-511	5HK-S1	
C55	5000			BPD-005	MD-502	TM5D5	811-005	DC-525	5HK-D5	

PARTS LIST AND DESCRIPTIONS (Continued)

CAPACITORS (cont)

ITEM No.	RATING CAP.	RATING VOLT	PHILCO PART No.	AEROVOX PART No.	CENTRALAB PART No.	CORNELL-DUBILIER PART No.	ERIE PART No.	MALLORY PART No.	SPRAGUE PART No.	NOTES
C56	.03	400		P488-03		PTE6S3		PT413	6TM-S3	
C57	.01	400		P488-01	D6-103	PTE4S1	GP2-333-103	PT411	4TM-S1	
C58	1500			SI1500	D6-152	TM5D15	GP2L-152	UC-5215	5HK-D15	
C59	.0068	400		P488-0068	D6-682	PTE6D68	GP2-333-682		6TM-D68	
C60	.0068	1000	30-4650-91	P1088-0068		PTE16D68			MB-D68	
C61	10000			BPD-01	DD-103	TM5S1	811-01	DC-511	5HK-S1	
C62	330		62-133001001	SI330	D6-331		GP2K-331	UC-5333	5GA-T33	
C63	3300	500								
C64	.022	200		P488-022		PTE4S22		PT4122	4TM-S22	
C65	.15	200		P288-15		PTE4P15		PT4015	2TM-P15	
C66	.15	200		P288-15		PTE4P15		PT4015	2TM-P15	
C67	330			SI330	D6-331		GP2K-331	UC-5333	5GA-T33	
C68	10000			BPD-01	DD-103	TM5S1	811-01	DC-511	5HK-S1	
C69	.1	200		P288-1	DF-104	PJ2P1		PT401	2TM-P1	
C70	.047	200		P488-047	DF-503	PTE4S47		PT4147	4TM-S47	
C71	.01	400		P488-01	D6-103	PTE4S1	GP2-333-103	PT411	4TM-S1	
C72	.022	200		P488-022		PTE4S22		PT4122	4TM-S22	
C73	.022	200		P488-022		PTE4S22		PT4122	4TM-S22	
C74	.0082	400								
C75	.033	200		P688-033				PT4133		
C76	.047	400		P488-047		PTE4S47		PT4147	4TM-S47	
C77	.0082	400								
C78	.1	400		P488-1	DF-104	PTE4P1		PT401	4TM-P1	
C79	.1	200		P288-1	DF-104	PJ2P1		PT401	2TM-P1	
C80	.015	400		P488-015		PTE6S15			6TM-S15	
C81	.033	400		P688-033				PT4133		
C82	1000			BPD-001	DD-102	TM5D1	801-001	DC-521	5HK-D1	
C83	1000			BPD-001	DD-102	TM5D1	801-001	DC-521	5HK-D1	
C84	1000			BPD-001	DD-102	TM5D1	801-001	DC-521	5HK-D1	
C85	.01	400		P488-01	D6-103	PTE4S1	GP2-333-103	PT411	4TM-S1	
C86	2000			BPD-002	DD-202	TM5D2	801-002	DC-522	5HK-D2	Note 1
C87	10000			BPD-01	DD-103	TM5S1	811-01	DC-511	5HK-S1	
C88	2200	500								
C89	82	500	60-00825317							
C90	390	500	60-10395417	1469-0004		5R5T4		MCB243	MS-34	
C91	390	500	60-10395417	1469-0004		5R5T4		MCB243	MS-34	
C92	5000			BPD-005	MD-502	TM5D5	811-005	DC-525	5HK-D5	
C93	10000			BPD-01	DD-103	TM5S1	811-01	DC-511	5HK-S1	
C94	10000			BPD-01	DD-103	TM5S1	811-01	DC-511	5HK-S1	
C95	.047	600		P688-047	DF-503	PTE6S47		PT6147	6TM-S47	
C96	68	2000	30-1246-1	HVD30-000068				MCL468	20GA-Q68	
C97	.47	200		P288-47		PJ2P5		PT4047	2TM-P47	
C98	.01	600		P688-01	D6-103	PTE6S1	GP2-333-103	PT611	6TM-S1	

Note 1. Some Models use .001MFD in this application.

CONTROLS

ITEM No.	RATING RESISTANCE	RATING WATTS	PHILCO PART No.	IRC PART No.	CLAROSTAT PART No.	CENTRALAB PART No.	MALLORY PART No.	INSTALLATION NOTES
R1A	2Meg	½	33-5564-14	Q18-139X	AT-116	BT-82-S	UT-451	Volume-tapped ⓐ 1Meg
B	Shaft		Not Req.	Not Req.	FS-3	Not Req.	Not Req.	Attach to R1A
C	Switch		Not Req.	76-1	SW-A	Not Req.	US-26	Attach to R1A
R2A	50KΩ	½	33-5563-62	AQ-500 ♦	RTV-434		UF54L } †	Horiz. Hold (Panel)
B	1Meg	½	Not Req.				UR16L }	Vert. Hold (Rear)
R3A	1000Ω	½	33-5563-63	QJ-501 *	RTV-435		UF13R } ††	Contrast (Panel)
B	100KΩ	½	Not Req.				UR15L }	Brightness (Rear)
R4A	12,500Ω	2	33-5546-51	WK-12500	A43-1500		R15000L	Width - wire wound
B	Shaft		Not Req.	Not Req.	FKS-1/4		Not Req.	Attach to R4A
R5A	2.5Meg	½	33-5565-32	Q11-239	AG-84-S	AB-83	SU-565	Vert. Linearity
B	Shaft		Not Req.	RQ	FKS-1/4	AK-1	Not Req.	Attach to R5A
R6A	2.5Meg	½	33-5565-32	Q11-239	AG-84-S	AB-83	SU-565	Height
B	Shaft		Not Req.	RQ	FKS-1/4	AK-1	Not Req.	Attach to R6A
R7A	250KΩ	½	33-5565-17	Q11-130	AG-55-S	AB-50	SU-46	Horiz. Hold Centering
B	Shaft		Not Req.	RQ	FKS-1/4	AK-1	Not Req.	Attach to R7A

† Universal replacement (Mallory exact duplicate part #UE1014)
†† Universal replacement (Mallory exact duplicate part #UE27)
* CONCENTRIKIT EQUIVALENT - KIT K-2 BASE ELEMENTS & SHAFTS B17-108 & P1-200 (Panel)
B11-128 & R1-216 (Rear)
♦ CONCENTRIKIT EQUIVALENT - KIT K-2 BASE ELEMENTS & SHAFTS B11-123 & P1-200 (Panel)
B11-137 & R1-216 (Rear)

RESISTORS

ITEM No.	RATING OHMS	RATING WATT	PHILCO PART No.	IRC PART No.	NOTES
R8	1Meg	½		BTS-1Meg	
R9	1Meg	½		BTS-1Meg	
R10	22KΩ	½		BTS-22K	
R11	1000Ω	½		BTS-1000	
R12	1.5Meg 5%	½			
R13	1.5Meg 5%	½			
R14	1000Ω	½		BTS-1000	
R15	100KΩ	½		BTS-100K	
R16	27KΩ	1	66-3274340	BTA-27K	
R17	10KΩ	1	66-3104340	BTA-10K	
R18	10KΩ	½		BTS-10K	
R19	6800Ω	½		BTS-6800	
R20	6800Ω	½		BTS-6800	
R21	220Ω	½		BTS-220	
R22	15KΩ	½		BTS-15K	
R23	47Ω	½		BTS-47	
R24	330Ω	1	66-1334340	BTA-330	
R25	15KΩ	½		BTS-15K	
R26	47Ω	½		BTS-47	
R27	220Ω	½		BTS-220	
R28	1000Ω	½		BTS-1000	
R29	2500Ω	6.2	33-3446-5		
R30	18KΩ	½		BTS-18K	
R31	270Ω	½		BTS-270	
R32	220Ω	½		BTS-220	
R33	3300Ω	½		BTS-3300	
R34	3900Ω	½		BTS-3900	

ITEM No.	RATING OHMS	RATING WATT	PHILCO PART No.	IRC PART No.	NOTES
R35	390KΩ	½		BTS-390K	
R36	330KΩ	½		BTS-330K	
R37	470Ω	½		BTS-470	Note 1.
R38	12KΩ	½		BTS-12K	
R39	2200Ω	½		BTS-2200	
R40	3900Ω	7	33-1335-116		
R41	150KΩ	½		BTS-150K	
R42	27KΩ	½		BTS-27K	
R43	470KΩ	½		BTS-470K	
R44	15KΩ	½		BTS-15K	Note 2.
R45	470KΩ	1		BTA-470K	
R46	270Ω	½		BTS-270	
R47	22KΩ	½		BTS-22K	
R48	12KΩ	1	66-3124340	BTA-12K	
R49	270Ω	½		BTS-270	
R50	22KΩ	½		BTS-22K	
R51	33KΩ	½		BTS-33K	
R52	10Meg	½		BTS-10Meg	
R53	3300Ω	½		BTS-3300	
R54	68KΩ	½		BTS-68K	
R55	270KΩ	½		BTS-270K	
R56	470KΩ	½		BTS-470K	
R57	270Ω	1	66-1274340	BTA-270	
R58	4700Ω	½	66-2474340	BTS-4700	
R59	20Ω				
R60	4700Ω	½		BTS-4700	
R61	1.5Meg	½		BTS-1.5Meg	

RESISTORS (cont)

ITEM No.	RATING OHMS	RATING WATT	PHILCO PART No.	IRC PART No.	NOTES
R62	3300Ω	½		BTS-3300	
R63	330Ω	½		BTS-330	
R64	120KΩ	½		BTS-120K	
R65	18KΩ	2	66-3185340	BTB-18K	
R66	1000Ω	½		BTS-1000	
R67	10Meg 5%	½	66-6108240	BTS-10Meg 5%	
R68	1Meg 5%	½	66-5108240	BTS-1Meg 5%	
R69	1Meg	½		BTS-1Meg	Note 3.
R70	470KΩ	½		BTS-470K	
R71	1Meg	½		BTS-1Meg	
R72	330KΩ	½		BTS-330K	
R73	27KΩ	½		BTS-27K	
R74	470KΩ	½		BTS-470K	
R75	220KΩ	½		BTS-220K	
R76	33KΩ	½		BTS-33K	
R77	820KΩ	½		BTS-820K	
R78	2700Ω	½		BTS-2700	
R79	8200Ω	1	66-2824340	BTA-8200	
R80	18KΩ	2	66-3185340	BTB-18K	
R81	10Ω	½		BTS-10	
R82	390KΩ	½		BTS-390K	Note 4.
R83	1Meg	½		BTS-1Meg	Note 4.
R84	10KΩ	½		BTS-10K	
R85	10KΩ	½		BTS-10K	
R86	8200Ω	½		BTS-8200	
R87	8200Ω	½		BTS-8200	
R88	2200Ω 5%	½	66-2228240	BTS-2200 5%	
R89	150KΩ	1	66-4154340	BTA-150K	
R90	510KΩ 5%	½	66-4518240	BTS-510K 5%	
R91	8200Ω	½		BTS-8200	
R92	270KΩ	½		BTS-270K	
R93	470KΩ	½		BTS-470K	

ITEM No.	RATING OHMS	RATING WATT	PHILCO PART No.	IRC PART No.	NOTES
R94	1.8Meg	½		BTS-1.8Meg	Note 7.
R95	2.2Meg	½		BTS-2.2Meg	
R96	100KΩ	1	66-4104340	BTA-100K	
R97	180Ω	5	33-1335-102		
R98	1000Ω	½		BTS-1000	
R99	1000Ω	½		BTS-1000	
R100	15KΩ	½		BTS-15K	Note 5.
R101	2700Ω	½		BTS-2700	
R102	100KΩ	½		BTS-100K	
R103	100KΩ	½		BTS-100K	
R104	15KΩ	½		BTS-15K	
R105	4.7Meg	½		BTS-4.7Meg	
R106	4.7Meg	½		BTS-4.7Meg	
R107	1200Ω	½		BTS-1200	
R108	15KΩ	½		BTS-15K	
R109	4700Ω	½		BTS-4700	Note 2.
R110	56KΩ	½		BTS-56K	
R111	47KΩ	½		BTS-47K	
R112	10KΩ	½		BTS-10K	
R113	33KΩ	1	66-334340	BTA-33K	Note 8.
R114	33KΩ	1		BTA-33K	Note 4.
R115	1Meg	½		BTS-1Meg	
R116	5000Ω	5	33-1335-118	1 3/4A-5000	Note 9.
R117	8200Ω	½		BTS-8200	Note 6.
R118	27KΩ	½		BTS-27K	
R119	39KΩ	2	66-3395340	BTB-39K	
R120	68KΩ	½		BTS-68K	
R121	4.7Ω	1	66-9478340		
R122	5Ω	10	33-3448-5	1 3/4A-5	
R123	1Meg	½		BTS-1Meg	
R124	*	½			
R125	150Ω	½		BTS-150	Note 4.

* 20" of 24" copper wire.
Note 1. Some models may use a 390Ω reisistor in this application.
Note 2. Some models may use a 10KΩ resistor in this application.
Note 3. Some models may use a 470KΩ resistor in this application.
Note 4. Not used in all models.
Note 5. Some models may use a 22KΩ resistor in this application.
Note 6. Some models may use a 12KΩ resistor in this application.
Note 7. Some models may use a 3.3Meg resistor in this application.
Note 8. Some models may use a 68KΩ, 1 watt resistor in this application.
Note 9. Some models may use a 4200Ω 5 Watt resistor in this application.

TRANSFORMER (FILAMENT)

ITEM No.	RATING PRI.	RATING SEC. 1	RATING SEC. 2	RATING SEC. 3	PHILCO PART No.	STANCOR PART No.	MERIT PART No.	CHICAGO PART No.	TRIAD PART No.	RCA TYPE No.
T1	117VAC ⓐ.62A	6.7VAC ⓐ8.9A			32-8573 32-8573-1 ①					

① Alternate filament transformer

TRANSFORMER (SWEEP CIRCUITS)

ITEM No.	RATING DC RESISTANCE PRI.	RATING DC RESISTANCE SEC.	PHILCO PART No.	STANCOR PART No.	MERIT PART No.	CHICAGO PART No.	TRIAD PART No.	RCA TYPE No.	NOTES
T2	787.3Ω tap ⓐ 14Ω, 20.3Ω, 43.3Ω, 67.3Ω	0Ω	32-8624 ①	A-8220 ②			D-24 & WC-11③④		Horiz. Output Trans.
T3	375Ω tap ⓐ 10Ω		32-8625			TSO-16			Vert. Output Trans.
T4A B	45Ω 51Ω		32-9648	DY-12 ⑤	MDF-71⑤	TY-8 ⑤	Y-24 ⑤		Horiz. Deflection Coils Vert. Deflection Coils

① Includes L33.
② Connect as in original circuit except, connect original terminal #7 to new terminal #8, connect new terminal #7 to chassis ground.
③ Connect terminal #8 to terminal #7, then connect original 6BQ6 plate lead to terminal #9, original #2 to new #5, original #6 to new "T", original #1 to new #3. Connect primary of WC-11 across terminals #3 and #1, secondary to AFC. If the picture is out of phase reverse secondary connections.
④ Drill new mounting holes.
⑤ Use original deflection coil network, yoke plug and leads. Connect as in original circuit.

TRANSFORMER (AUDIO OUTPUT)

ITEM No.	RATING IMPEDANCE PRI.	RATING IMPEDANCE SEC.	RATING DC RES. PRI.	RATING DC RES. SEC.	PHILCO PART No.	STANCOR PART No.	MERIT PART No.	CHICAGO PART No.	TRIAD PART No.	NOTES
T5	5.8KΩ	3.3Ω	500Ω	.7Ω	32-8578	A-3878	A-2930	RO-9 ①	S-3X	

① Drill one new mounting hole.

SPEAKER

ITEM No.	RATINGS SIZE	RATINGS FIELD	RATINGS V. C. IMP.	PHILCO PART No.	VIKING PART No.	QUAM PART No.	NOTES
SP1A B	6" 10"	PM PM	3.3Ω 3.3Ω	36-1641-13 ① 36-1646-6①② 36-1651 ①③ 36-1641-10①④	6J4 10J11	6A21 10A31	① Some Models may use electro-dynamic speakers with a 60Ω field coil, in these models the speaker field is used for the filter choke ② Used in Models A-T2227SS, A-T1856W, A-T2272, A-UT2272, 22B4101, 22BU4101, 22B4301, 22B4303 & 22BU4303 ③ Used in models 18B3100, 18B3100L, 18B3100HM, 18BU3100, 18BU3100L, 18BU3100HM, 22B4100, 22B4100L, 22BU4100L ④ Used in Models A-T1816, A-T2230, 18B3000, 18BU3000, 18B3001, 18BU3001, 23B4000 & 22BU4000.

COILS (RF-IF)

ITEM No.	USE	DC RES. PRI.	DC RES. SEC.	PHILCO PART No.	MEISSNER PART No.	MERIT PART No.	MILLER PART No.	NOTES
L1	Ant. Trans.	.7Ω	.7Ω	32-4432-2				
L2	Ant. Trans.	.7Ω	.7Ω					Part of L1
L3	FM Trap	0Ω		32-4438-2				
L4	Ant. Coils	0Ω		76-7654				Includes wafer switch
L5	Fil. Choke	0Ω		32-4500-1				
L6	Neutr. Coil	0Ω		32-4550-10				
L7	RF Coils	0Ω		76-7656				
L8	Mixer Grid Coils	0Ω		76-7658				Includes wafer switch
L9	Fil. Choke	0Ω		32-4500-1				Includes wafer switch
L10	Osc. Coils	0Ω		76-7660				
L11	RF Choke	0Ω		32-4550-7				Includes wafer switch
L12	Conv. Plate	.1Ω		32-4359-13				
L13	IF Coupling	0Ω	0Ω	32-4548-29				
L14	28.1MC Trap	.1Ω		32-4486-27	20-1006		617IA *	
L15	1st Video IF	.5Ω		32-4486-32	17-1003	TV-102 *	617IA *	
L16	2nd Video IF	.2Ω		32-4486-30	17-1004	TV-103 *	6189 *	
L17	22.1MC Trap	0Ω		32-4496				Tapped
L18	Fil. Choke	.1Ω		32-4112-15	19-3001	TV-189	4606	2.9Microhenries
L19	3rd Video IF	.4Ω	.4Ω	32-4486-29	17-1064	TV-116	6250	
L20	4th Video IF	.5Ω	.4Ω	32-4486-33	17-1063	TV-116	6249	
L21	Series Peak. Coil	1.8Ω		32-4143-1	19-3036	TV-180	6176	40 Microhenries
L22	Series Peak. Coil	1.8Ω		32-4112-24			4608	4 Microhenries
L23	Series Peak. Coil	3.7Ω		32-4480-8	19-3125		6153	125 Microhenries
L24	Series Peak. Coil	1.8Ω		32-4112-24			4608	4 Microhenries (Not used in in all models)
L25	Variable Shunt Peak. Coil	10Ω		32-4467-17	19-1922		6160	200-400 Microhenries
L26	Series Peak. Coil	4.8Ω		32-4480-9	19-3180	TV-184	6180	180 Microhenries
L27	4.5MC Trap	1.7Ω		32-4463-2	20-1004	TV-151	1470	
L28	Variable Shunt Peak. Coil	5.5Ω		32-4467-18	19-1920		4563	60-200Microhenries
L29	Sound IF	4.4Ω		32-4463-10	20-1005	TV-151	1470	
L30	Ratio Det.	5Ω	.9ΩCT	32-4450-6A	17-3497	TV-115	6205	Tertiary winding=.85Ω
L31	Fil. Choke	.1Ω		32-4112-15	19-3001	TV-189	4606	2.9Microhenries
L32	Horiz. Osc.	170Ω		32-4557	19-1576	TV-163	6210	
L33	RF Choke	1.8Ω					4624	Part of T2; 15.2 Microhenries
L34	RF Choke	1.8Ω		32-4112-24			4608	4 Microhenries
L35	RF Choke	1.8Ω		32-4112-24			4608	4 Microhenries

* Enlarge mounting hole.

FILTER CHOKE

ITEM No.	RATINGS TOTAL DIRECT CURRENT	RATINGS D. C. RESISTANCE	RATINGS INDUCTANCE (0 CURRENT 1000 ~)	PHILCO PART No.	STANCOR PART No.	MERIT PART No.	CHICAGO PART No.	TRIAD PART No.
L36	.280A	40Ω	1.1HY	Part of Speaker	C-2326 ①	C-2996 ①	TR-1733 ①	C-23X

① Drill one new mounting hole.

SELENIUM RECTIFIER

ITEM No.	RATING CURRENT	PHILCO PART No.	SELETRON PART No.	FEDERAL PART No.	MALLORY PART No.	SARKES TARZIAN PART No.
M1	.280A	34-8003-7 34-8003-16 ①	6Q4	1090A	6S300	300
M2	.280A	34-8003-7 34-8003-16 ①	6Q4	1090A	6S300	300

① Alternate selenium rectifier.

FUSES

ITEM No.	TYPE	RATING	PHILCO FUSE	PHILCO HOLDER	LITTELFUSE FUSE	LITTELFUSE HOLDER	BUSS FUSE	BUSS HOLDER
M3	3AG S/B P/T	6/10A	45-2656-23		31501.6 (3AG S/B P/T - 1 6/10A)		MDV 1 6/10	
M4	*							

* Piece of #26 wire from pin 7 of interchassis socket to pin 6 of V17.

PHILCO MODELS A-T1816, A-T1856W, A-T2230, A-T2272, A-T2275S, A-UT2272, 18B3000, 18B3001, 18B3100, L, HM, 18BU3000, 18BU3001, 18BU3100, L, HM, 22B4100, L, 22B4101, 22B4301, 22B4303, 22BU4000, 22BU4100, L, 22BU4101, 22BU4303 (Ch. D-81, D-181, R-81A, B, R-181, R-181U) (Codes 129, 130)

PARTS LIST AND DESCRIPTIONS

TUBES (SYLVANIA, GENERAL ELECTRIC or Equivalent)

ITEM No.	USE	REPLACEMENT DATA: PHILCO PART No.	REPLACEMENT DATA: STANDARD REPLACEMENT	RTMA BASE TYPE	NOTES
V1	RF Amplifier	6BZ7	6BZ7	9AJ	
V2	Converter	12AZ7	12AZ7	9A	
V3	1st. Video IF Amp.	6CB6	6CB6	7CM	
V4	2nd. Video IF Amp.	6CB6	6CB6	7CM	
V5	3rd. Video IF Amp.	6CB6	6CB6	7CM	
V6	Video Output	12BY7	12BY7	9BF	
V7	Sound IF Amp.	6AU6	6AU6	7BK	
V8	Ratio Detector-AF Amplifier - AGC Clamper	6T8	6T8	9E	
V9	Audio Output	6K6GT	6K6GT	7S	
V10	Sync Amplifier-Sync Phase Inv.	6U8	6U8	9AE	
V11	Sync Separator	6BE6	6BE6	7CH	
V12	Vert. Mult.	12BH7	12BH7	9A	
V13	Vert. Output	12B4	12B4	9AG	
V14	Horiz. AFC	6AL5	6AL5	6BT	
V15	Horiz. Mult.	12AU7	12AU7	9A	
V16	Horiz. Output	6BQ6GT	6BQ6GT	6AM	
V17	Damper	6AX4GT	6AX4GT	4CG	
V18	HV Rectifier	1B3GT	1B3GT	3C	

CATHODE-RAY TUBE

ITEM No.	REPLACEMENT DATA: PHILCO PART No.	REPLACEMENT DATA: SYLVANIA PART No.	REPLACEMENT DATA: GENERAL ELECTRIC PART No.	RTMA BASE TYPE	NOTES
V19A	17YP4	17YP4	17YP4	12D	
			17VP4 / 17LP4	12D	
B	21ZP4	21ZP4		12D	
C	21ZP4A	21ZP4A		12D	
D	21EP4A	21EP4A	21EP4A	12D	

CAPACITORS

Capacity values given in the rating column are in mfd. for Electrolytic and Paper Capacitors, and in mmfd. for Mica and Ceramic Capacitors.

ITEM No.	RATING: CAP.	RATING: VOLT	REPLACEMENT DATA: PHILCO PART No.	AEROVOX PART No.	CENTRALAB PART No.	CORNELL-DUBILIER PART No.	ERIE PART No.	MALLORY PART No.	SPRAGUE PART No.	NOTES
C1	120	150	30-2568-51	AFHS1-69		XA007		FP140	TVL-1540	
C2	120	150	30-2568-51	AFHS1-69		XA007		FP140	TVL-1540	
C3A	■80	300	30-2584-35	AFH4-95		D114		FP333.8		
B	10	300		PRS450/80				TC83	TVL-4801	
C	▲20	475								
D	▲20	300								
C4A	10	300	30-2570-57	AFH4-18		D111		FP343.6	TVL-4578	
B	▲10	300						TC62		
C	▲40	300								
D	■20	300								
C5	2	50	30-2417-7	E26E6		BBR-2-50T		TC302	TVA-1301	
C6	470		30-1225-18	SI470	D6-471		GP2K-471	UC-5347	5GA-T47	
C7	470		30-1225-18	SI470	D6-471		GP2K-471	UC-5347	5GA-T47	
C8	20		62-02030901l	SI20NP0	TCZ-20		NP0K-200	ZT-542	5TCC-Q2	
C9	220		62-12200100l	SI220	D6-221		GP2K-221	UC-5322	5GA-T22	
C10	10		62-01040901l							
C11	150		62-11500101l	SI150	D6-151	TM5T15	GP2K-151	UC-5315	5GA-T15	
C12	2.2		30-1221-6	SI2.2NP0	TCZ-2.2		NP0K-2R2		5TCCB-V22	
C13	.5-3		31-6520-3		829-3			CT565A		
C14	150		62-11500101l	SI150	D6-151	TM5T15	GP2K-151	UC-5315	5GA-T15	
C15	150		62-11500101l	SI150	D6-151	TM5T15	GP2K-151	UC-5315	5GA-T15	
C16	10000		30-1238-2	BPD-01	DD-103	TM5S1	811-01	DC-511	5HK-S1	
C17	.6		30-1221-15							
C18	39		62-03940901l							
C19	.5-3		31-6520-3		829-3			CT565A		
C20	1.5		30-1221-8	SI1.5NP0	TCZ-1.5		NP0K-1R5		5TCCB-V15	
C21	22		62-022009001							
C22	2.2		30-1224-66							
C23	15		62-01540901l	SI15	D6-150		GP1K-150	UC-5415	5GA-Q15	
C24	1000		30-1245-1	EF-001	MFT-1000				503C-D1	
C25	1000		30-1245-1	EF-001	MFT-1000				503C-D1	
C26	1500			SI1500	D6-152	TM5D15	GP2L-152	UC-5215	5HK-D15	
C27	1.5		30-1221-8	SI1.5NP0	TCZ-1.5		NP0K-1R5		5TCCB-V15	
C28	5		30-1221-13	SI5NP0	TCZ-4.7		NP0K-050	ZT-555	5TCCB-V47	
C29	18	500	62-018400021							
C30	47		60-00475420	SI47	D6-470		GP1K-470	UC-5447	5GA-Q47	
C31	1500			SI1500	D6-152	TM5D15	GP2L-152	UC-5215	5HK-D15	
C32	1500			SI1500	D6-152	TM5D15	GP2L-152	UC-5215	5HK-D15	
C33	22		62-022009001							
C34	100		62-11040900l	SI100	D6-101	TM5T1	GP1K-101	UC-531	5GA-T1	
C35	1500			SI1500	D6-152	TM5D15	GP2L-152	UC-5215	5HK-D15	
C36	1000			SI1000	D6-102	TM5D1	GP2L-102	UC-521	5HK-D1	
C37	1500			SI1500	D6-152	TM5D15	GP2L-152	UC-5215	5HK-D15	
C38	1500			SI1500	D6-152	TM5D15	GP2L-152	UC-5215	5HK-D15	
C39	5		30-1224-28	SI5NP0	TCZ-4.7		NP0K-050	ZT-555	5TCCB-V47	
C40	.1	200		P288-1	DF-104	PJ2P1		PT401	2TM-P1	
C41	68		62-06840901l							
C42	.1	400		P488-1	DF-104	PTE4P1		PT401	4TM-P1	
C43	.01	400		P488-01	D6-103	PTE4S1	GP2-333-103	PT411	4TM-S1	
C44	1000			BPD-001	DD-102	TM5D1	801-001	DC-521	5HK-D1	
C45	.1	400		P488-1	DF-104	PTE4P1		PT401	4TM-P1	
C46	2.2		30-1221-6	SI2.2NP0	TCZ-2.2		NP0K-2R2		5TCCB-V22	
C47	18		62-018400021							
C48	.0033	400		P688 - 0033	D6-332	PTE6D33	GP2-333-332	PT6233	5HK-D33	
C49	.01	400		P488-01	D6-103	PTE4S1	GP2-333-103	PT411	4TM-S1	
C50	330		62-133001001	SI330	D6-331		GP2K-331	UC-5333	5GA-T33	
C51	150		62-11500101l	SI150	D6-151	TM5T15	GP2K-151	UC-5315	5GA-T15	
C52	1500			SI1500	D6-152	TM5D15	GP2L-152	UC-5215	5HK-D15	
C53	.0022	400		P688-0022	D6-222	PTE6D22	GP2-333-202	PT6222	6TM-D22	
C54	10000			BPD-01	DD-103	TM5S1	811-01	DC-511	5HK-S1	
C55	5000			BPD-005	MD-502	TM5D5	811-005	DC-525	5HK-D5	

PARTS LIST AND DESCRIPTIONS (Continued)

MISCELLANEOUS

ITEM No.	PART NAME	PHILCO PART No.	NOTES
M5	Dial Light	34-2068	#47 (VHF)
M6	Tuner	76-7664	VHF
M7	Crystal	34-8022	1N64 Video Detector
M8	Focus Magnet	76-6126-4	Includes centering device
M9	Ion Trap	76-6077-2	
M10	Correction Magnet	76-6594	Two used
M11	Tuner	43-6778	UHF Adaptor UT21D
M12	Dial Light	34-2064	#47 (UHF) 2 used } Part of UHF Adaptor UT21D
M13	Crystal	34-8024	CP1-UHF mixer } Part of UHF Adaptor UT21D
M14	Switch	42-1996-4	UHF-VHF Changeover - wafer type } Part of UHF Adaptor UT21D
M15	Dial Light	34-2068	#47 Jewel
	Cabinet	10991	Mahogany- Models A-T2275S, 22B4101, 22BU4101
	Cabinet	10982-6	Metal - Models 18B3000, 18BU3000
	Cabinet	10982-8	Metal - Models 18B3001, 18BU3001
	Cabinet	10977	Mahogany - Model 18B3100
	Cabinet	10977-4	Light - Model 18B3100L, 18BU3100L
	Cabinet	10977-5	Honey-Maple - Models 18B3100HM, 18BU3100HM
	Cabinet	10977-3	Mahogany - Model 18BU3100
	Cabinet	10948-6	Mahogany - Models A-T2272, A-UT2272, 22B4303, 22BU4303
	Cabinet	10971-7	Mahogany - Model A-T2230
	Cabinet	10982-2	Metal - Model A-T1816
	Cabinet	10979-7	Walnut - Model A-T1856W
	Cabinet	10999	Metal - Models 22B4000, 22BU4000
	Cabinet	11012	Mahogany - Models 22B4100, 22BU4100
	Cabinet	11012-3	Light - Models 22B4100L, 22BU4100L
	Cabinet	10978-1	Mahogany - Model 22B4301
	Knob	54-4799-3	Brightness - Light cabinet Models
	Knob	54-4768	Brightness - Models 18B3000, 18BU3000
	Knob	54-4799	Brightness - Models (All other)
	Knob	76-6863-15	Channel Selector - Light cabinet models.
	Knob	76-6863-30	Channel Selector - Models 18B3000, 18BU3000
	Knob	76-6863-14	Channel Selector - All other models.
	Knob	76-6048-1	Contrast - Light cabinet models
	Knob	76-6048	Contrast - Models A-T1816, A-T2272, A-UT2272, A-T2275S 18B3100HM, 18BU3100HM, 22B4101, 22BU4101, 22B4301, 22B4303,
	Knob	54-4797	Contrast - Models A-T1856W, A-T2230, 18B3000, 18BU3000, 18B3001, 18BU3001, 18B3100, 18BU3100, 22B4000, 22BU4000, 22B4100, 22BU4100, 22B4303
	Knob	54-4803	Fine tuning - Models 18B3000, 18BU3000
	Knob	76-6104	Fine tuning - All other models
	Knob	76-6048-1	Horiz. Hold -Light cabinet models
	Knob	54-4797	Horiz. Hold - Models A-T1816, A-T1856W, A-T2230, 18B3000, 18BU3000, 18B3001, 18BU3001, 18B3100, 18U31000, 22B4000, 22BU4000, 22B4100, 22BU4100, 22B4101, 22B4303
	Knob	76-6048	Horiz. Hold - Models A-T2272, A-UT2272, A-T2275S, 18B3100HM, 18BU3100HM, 22B4000, 22BU4000, 22B4101, 22BU4101, 22B4301, 22B4303, 22BU4303
	Knob	76-6213	tone - Model A-T1856W
	Knob	54-4799-3	Vert. hold - Light cabinet models
	Knob	54-4768	Vert. hold - Models 18B3000, 18BU3000
	Knob	54-4799	Vert. Hold - All other models
	Knob	76-6581-2	Off/on/Volume - light cabinet models
	Knob	54-4804-3	Off/on/Volume - Models 18B3000, 18BU3000
	Knob	76-6581-1	Off/on/Volume - Models A-T1816, A-T2272, A-UT2272, A-2275S, 18B3100HM, 18BU3100HM, 22B4101, 22B4301, 22B4303
	Knob	76-6166	Off/on/Volume - Models A-T1856W, A-T2230, 18B3001, 18BU3001, 18B3100, 18BU3100, 22B4000, 22BU4000, 22B4100, 22BU4100, 22B4101, 22B4303
	Knob	76-8292	UHF tuning - Models 18BU3000, 18BU3001, 18BU3100, L, HM, 22BU4100, L
	Safety Glass	54-8293-3	Models A-T1816, 18B3000, 18BU3000, 18B3001, 18BU3001
	Safety Glass	54-7943-57	Model A-T1856W
	Safety Glass	54-7943-62	Model S A-T2230
	Safety Glass	54-7943-49	Models A-T2272, UT2272, 22B4301, 22B4303, 22BU4303
	Safety Glass	54-7943-64	Models A-T2275S, 22B4101, 22BU4101
	Safety Glass	54-7943-70	Models 18B3100, 18B3100L, 18B3100HM, 18BU3100, 18BU3100L, 18BU3100HM
	Safety Glass	54-8293-5	Models 22B4000, 22BU4000
	Safety Glass	54-7943-74	Models 22B4100, 22B4100L, 22BU4100, 22BU4100L

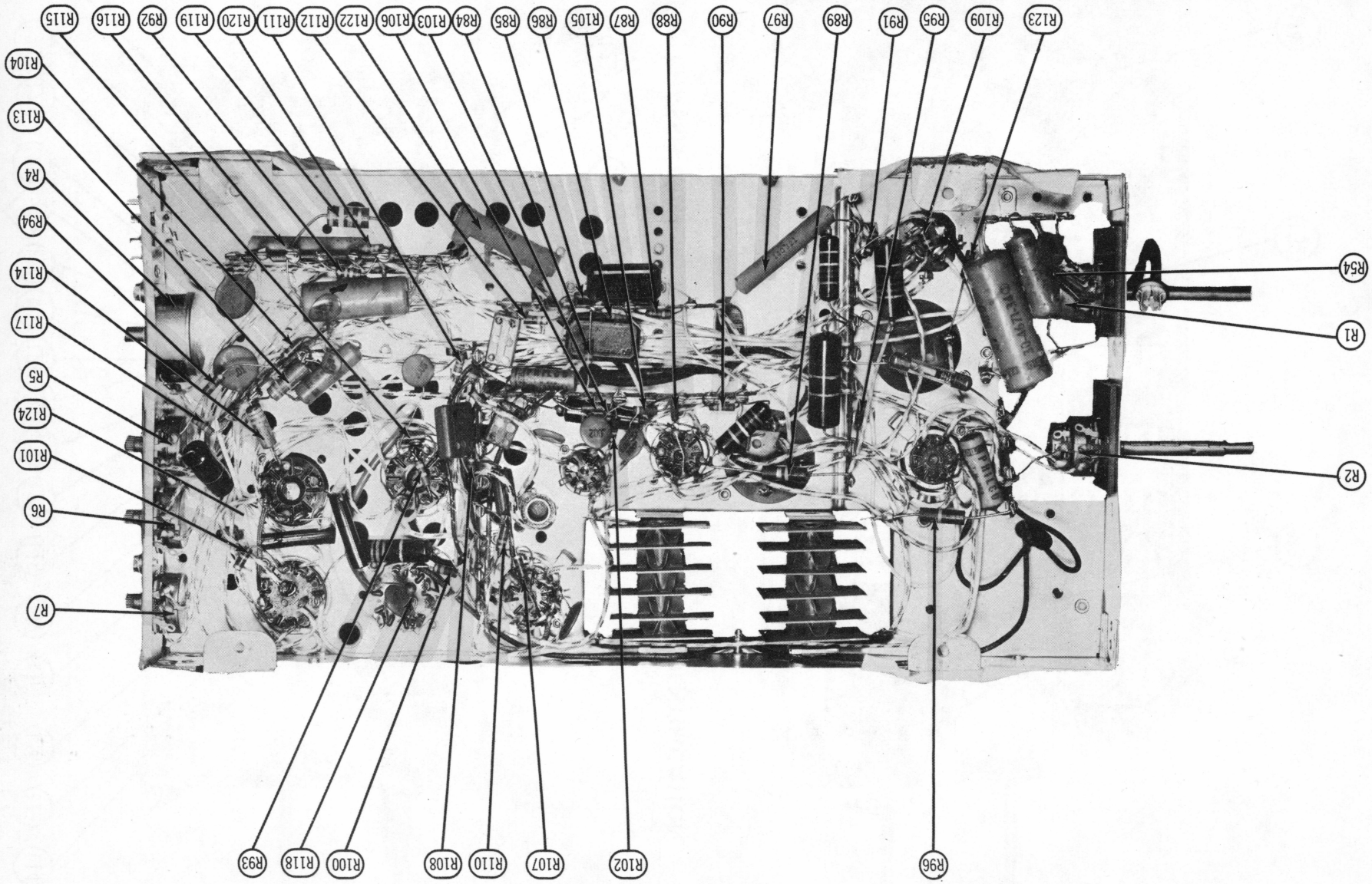
R115
R116
R92
R119
R120
R111
R112
R122
R106
R103
R84
R85
R86
R105
R87
R88
R90
R97
R89
R91
R95
R109
R123
R104
R113
R4
R94
R114
R117
R5
R124
R101
R6
R7
R54
R1
R2
R93
R118
R100
R108
R110
R107
R102
R96

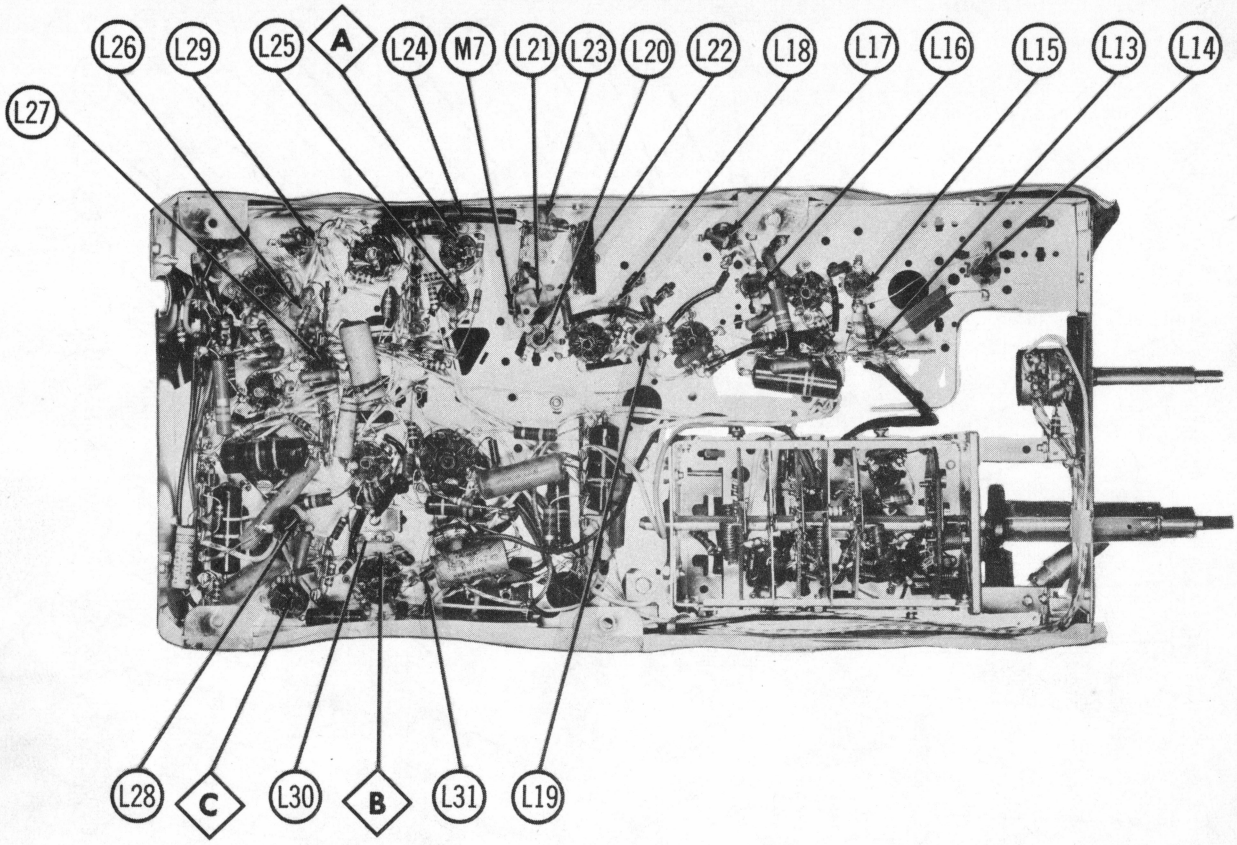

RF-IF CHASSIS-TRANS., INDUCTOR AND ALIGNMENT IDENTIFICATION

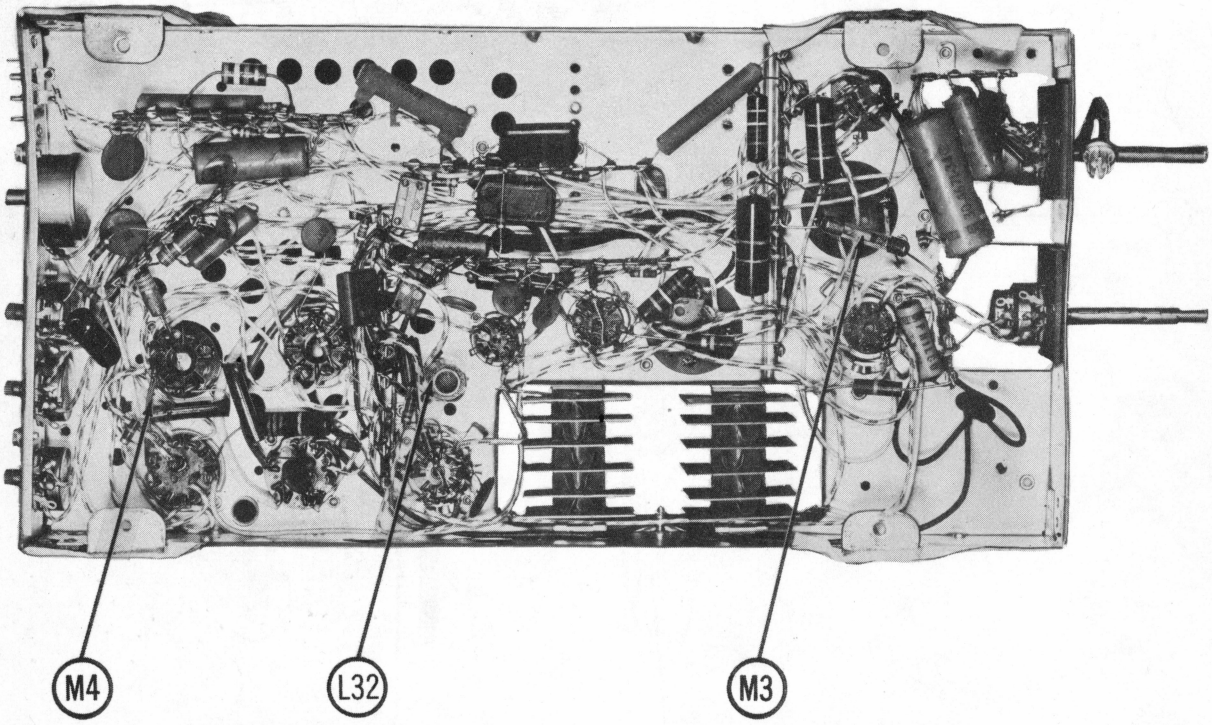

SWEEP CHASSIS-BOTTOM VIEW-CAPACITOR IDENTIFICATION

TROUBLE SHOOTING AIDS (cont)

POWER

DEAD SET

If filaments fail to light, check AC interlock assembly, M4, switch on volume control and T1. If filaments light, check M1, M2, M3 and B+ filter and decoupling components.

SMALL AND/OR DIM PIX

Check M1, M2 and B+ filter and decoupling circuit and components.

HIGH VOLTAGE

LOSS OF HIGH VOLTAGE

Check by substitution V15, V16, V17 and V18, Check waveform W15.

If Satisfactory	If Unsatisfactory
Check T2, T4A, R121, and other associated components.	Check C89, C90, C92, R107, R111, R115 and other associated components.

INSUFFICIENT HIGH VOLTAGE

Check by substitution V15, V16, V17 and V18. Measure B+.

If Satisfactory	If Unsatisfactory
Proceed as outlined under "Loss of High Voltage".	Check M1, M2 and other associated components.

BLOOMING

Check by substitution V15, V16, V17 and V18. Check T2, T4A, R121, picture tube and other associated circuit components.

GENERAL

RASTER SOUND NO PIX

See "Loss of Video".

RASTER NO SOUND NO PIX

Check by substitution V1, V2, V3, V4, V5 and V6. Check video detector crystal and assembly. Check components associated with the video IF strip.

NO RASTER NO SOUND

See "Dead Set".

INTERMITTENT STREAKS

Check signal at W1 for interference pulses. Check high voltage section for corona discharge and arcing.

Symptoms shown are assumed and are not indicative of the quality and workmanship of this receiving equipment.

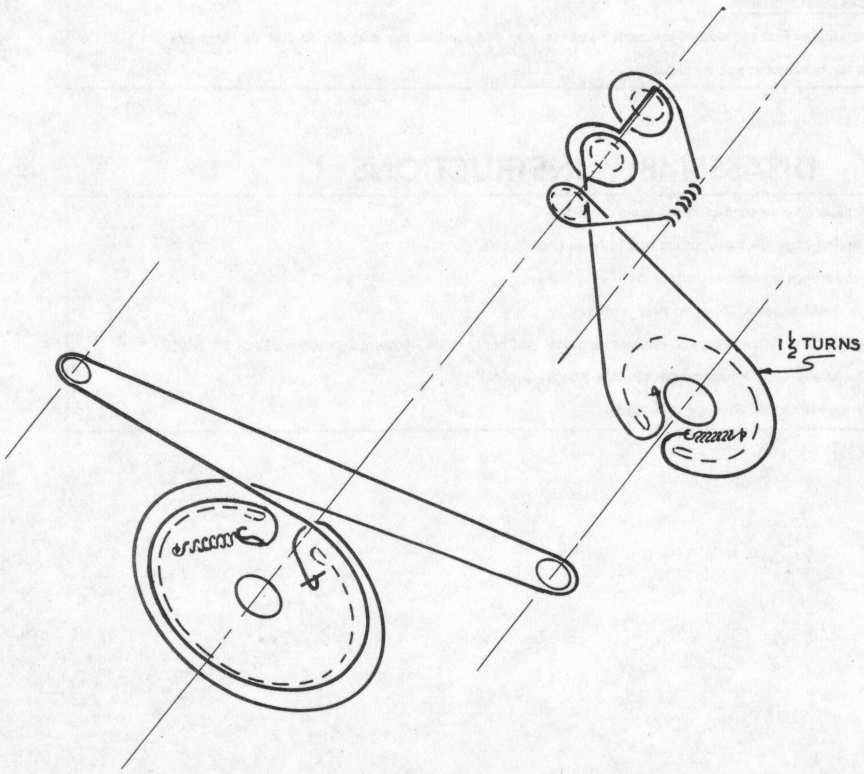

UHF DRIVE CORD STRINGING

SERVICING IN THE FIELD

TUNER OSCILLATOR ADJUSTMENTS

Touch-up adjustments of the RF Tuner Oscillator Circuit may be accomplished by removing the Channel Selector and Fine Tuning knobs.

PICTURE TUBE SAFETY GLASS CLEANING

To clean safety glass remove 4 metal screws holding 4 metal corners. Remove safety glass. Use extreme caution when removing safety glass.

PICTURE TUBE REMOVAL

For picture tube removal it is necessary to remove chassis. (See disassembly instructions.)

SERVICE ADJUSTMENT LOCATION

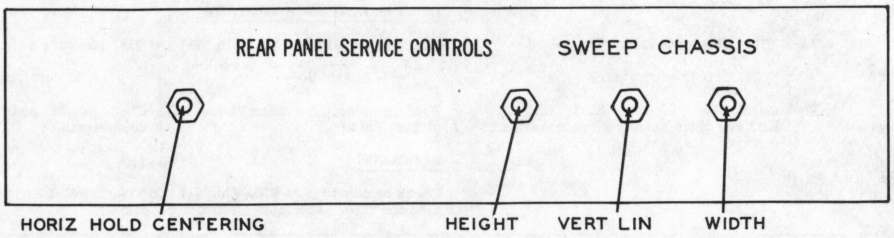

HORIZONTAL OSCILLATOR FIELD ADJUSTMENT

For adjustment of the Horiz. Oscillator, it is necessary to remove the rear cover and supply power to set. Adjustment is located on top of chassis. Set the Horiz. Hold Control at the center of its range and adjust horiz. ringing coil slug (L32) until picture synchronizes horizontally. (For location see tube placement chart).

SOUND IF DETECTOR BUZZ ADJUSTMENT

To eliminate Sound IF Detector Buzz, adjust the Ratio Detector Secondary (L30) located on top of chassis. (See tube placement chart).

FUSES

Two fuses are used-one for LV power supply protection. One piece of #26 wire heater protective link. (For Location, see tube placement chart).

CENTERING

Centering is accomplished mechanically by means of a centering lever on the P.M. Focusing assembly. Adjust the centering lever from side to side, and up and down until the picture is properly centered.

ANTI-PIN CUSHION ADJUSTMENT

Reduce the picture size so that the side of the raster are visible, and position the magnets so that all sides are straight lines and the corners are at right angles.

DISASSEMBLY INSTRUCTIONS

1. Remove 7 push on type control knobs from front panel.
2. Remove spring clip. Remove safety shield from tuner shaft.
3. Disconnect antenna transmission line from rear cover.
4. Remove 13 metal screws. Remove rear cover.
5. Disconnect speaker, inter chassis connecting cable, vol cont. cable, yoke plug, CRT socket, HV lead.
6. Remove 8 chassis bolt. Remove both chassis (4bolts to each).
7. Remove 2 speaker nuts. Remove speaker.