DOES NOT CIRCULATE
FOR USE ONLY IN THE LIBRARY

RCA LABORATORIES DIVISION
NOV 18 1957
LIBRARY
PRINCETON, N. J.

RCA VICTOR

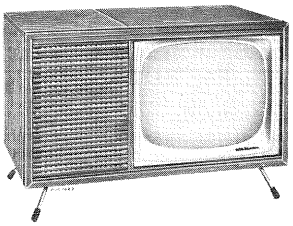

"The BELLEVUE"
Models
14-VT-8155 & U
Mahogany Grain

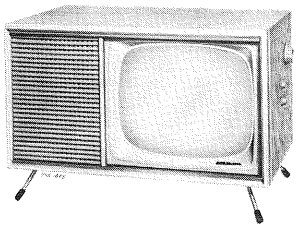

"The BELLEVUE"
Models
14-VT-8157 & U
Oak Grain

TABLE TELEVISION-PHONOGRAPH COMBINATION RECEIVERS

MODELS

14-VT-8155 & U, 14-VT-8157 & U

Chassis Nos. KCS111F or KCS111H and KRS23A

— Mfr. No. 274 —

SERVICE DATA

— 1957 No. T14 —

PREPARED BY COMMERCIAL SERVICE
RCA SERVICE CO., INC.
CAMDEN 8, N. J.
FOR
RADIO CORPORATION OF AMERICA
RCA VICTOR TELEVISION DIVISION

GENERAL DESCRIPTION

All models are combination "14" inch table television-phonograph receivers featuring full 12 channel VHF coverage and a 45 RPM automatic record changer. Models with the "U" designation also feature coverage of any UHF channel in addition to the VHF channels.

All models include intercarrier FM sound system; quadrature grid FM detector; high picture brilliance; A-F-C horizontal hold; stabilized vertical hold; and reduced hazard high voltage supply.

INDEX

ALIGNMENT PROCEDURE ..... See bottom of Page 4
ANTENNA CONNECTIONS ..... Pages 3 and 4
CHASSIS DESIGNATIONS ..... Page 2
CHASSIS REMOVAL ..... Page 4
CHASSIS VIEW ..... Page 5
FIELD SERVICE DATA SHEET ..... Opposite Page 6
KINESCOPE AND MASK CLEANING ..... Page 4
OPERATING INSTRUCTIONS ..... Page 3
PRINTED BOARD ASSEMBLY ..... Pages 7 and 8
RECORD CHANGER INFORMATION ..... Page 4
REPLACEMENT PARTS ..... Pages 11 to 16
SCHEMATIC DIAGRAMS ..... Pages 6, 9 and 10
SERVICE INFORMATION ..... Page 4
SERVICE PRECAUTIONS ..... Page 3
TUBE COMPLEMENT ..... Page 2
VOLTAGE CHART ..... See bottom of Page 4

ELECTRICAL SPECIFICATIONS

PICTURE SIZE ... Approx. 108 sq. ins. on a 14ATP4 Kinescope
POWER RATING ..... Approx. 140 watts
POWER INPUT ..... 115 Volts AC, 60~
AUDIO POWER OUTPUT RATING ..... 1.5 watts max.
VIDEO RESPONSE ..... To 3.2 mc.
SWEEP DEFLECTION ..... Magnetic
FOCUS ..... Electrostatic

SUPPLEMENTARY INFORMATION

Issue	Subject

List related Supplements and Service Tips above.

First Edition—First Printing 10-11-57
Tmks. ® Reg. U. S. Pat. Off.
Printed in U. S. A.

ELECTRICAL SPECIFICATIONS
(Continued)

RCA TUBE COMPLEMENT—TELEVISION CHASSIS

Tube Used	Function
VHF Tuner KRK46N (KCS111F)	
(1) RCA 5BQ7A	R-F Amplifier
(2) RCA 6CQ8	R-F Oscillator and Mixer
UHF/VHF Tuner KRK47N/64F (KCS111H)	
(1) RCA 3AF4A	UHF Oscillator
(2) RCA 5BQ7A	VHF R-F Amplifier
(3) RCA 6CQ8	VHF R-F Oscillator and Mixer UHF I-F Amplifier

A K3D or a 1N82 crystal is used as the UHF mixer.

All Chassis

(1) RCA 6CU8	1st Picture I-F Amp. & Vertical Osc.
(2) RCA 4CB6	2nd Picture I-F Amp.
(3) RCA 6CU8	3rd Picture I-F Amp. & Sync Output
(4) RCA 8AW8A	Video Ampl. & 1st Sync.
(5) RCA 4AU6	Sound I-F Amplifier
(6) RCA 4DT6	Sound Detector & 1st Audio Amp.
(7) RCA 6AQ5A	Audio Output
(8) RCA 6AQ5A	Vertical Sweep Output
(9) RCA 8CG7	Horizontal Sweep Oscillator and Control
(10) RCA 17DQ6A	Horizontal Sweep Output
(11) RCA 17AX4GT	Damper
(12) RCA 1X2B	High Voltage Rectifier
(13) RCA 14ATP4	Kinescope

Two selenium rectifiers are used for Low Voltage rectification. A crystal diode is used as the Picture 2nd Detector.

RCA TUBE COMPLEMENT—PHONO AMPLIFIER

Tube Used	Function
(1) RCA 12AU7	Audio Amp.
(2) RCA 12AQ5	Audio Output

CHASSIS DESIGNATIONS

TELE-VISION CHASSIS	TUNERS	KINESCOPE	MODELS
KCS111F	KRK46N	14ATP4	14-VT-8155 14-VT-8157
KCS111H	KRK47N KRK64F	14ATP4	14-VT-8155U 14-VT-8157U

PHONOGRAPH AMPLIFIER KRS23A
RECORD CHANGER RP190C-3

TELEVISION R-F FREQUENCY RANGE

VHF Models

All 12 VHF channels, 54 mc. to 88 mc., 174 mc. to 216 mc.

UHF/VHF Models

Any of 70 UHF channels ..... 470 mc. to 890 mc.
Any of 12 VHF channels, 54 mc. to 88 mc., 174 mc. to 216 mc.

INTERMEDIATE FREQUENCIES

Picture I-F Carrier Frequency ..... 45.75 mc.
Sound I-F Carrier Frequency ..... 41.25 mc.

REAR CONTROLS

Brightness ..... Single Control
Horizontal Hold ..... Single Control
Vertical Hold ..... Single Control

NON-OPERATING CONTROLS (internal)
(not including R-F and I-F adjustments)

Deflection Coil ..... adjustment on Kinescope neck
Height ..... Single Control
Picture Centering ..... adjustment on yoke
Vertical Linearity ..... Single Control
Width ..... Screwdriver Adjustment

IMPORTANT WARNING

THE CHASSIS OF THESE RECEIVERS ARE CONNECTED TO ONE SIDE OF THE AC SUPPLY. OPERATION OUTSIDE THE CABINET OR WITH THE COVERS REMOVED, INVOLVES A SHOCK HAZARD FROM THE RECEIVER POWER SUPPLIES. WORK ON THE RECEIVER SHOULD NOT BE ATTEMPTED BY ANYONE WHO IS NOT THOROUGHLY FAMILIAR WITH THE PRECAUTIONS NECESSARY WHEN WORKING ON THIS TYPE EQUIPMENT. AN ISOLATION TRANSFORMER SHOULD BE INSERTED IN THE POWER LINE, BETWEEN THE RECEIVER AND THE AC SUPPLY, BEFORE ANY SERVICE ON THE RECEIVER IS ATTEMPTED, INCLUDING TUBE REPLACEMENT. DO NOT OPERATE THE RECEIVER WITH THE HIGH VOLTAGE COMPARTMENT SHIELD REMOVED. REFER TO "SERVICING PRECAUTIONS" ON PAGE 3 BEFORE SERVICING THE RECEIVER.

KINESCOPE HANDLING PRECAUTIONS

DO NOT INSTALL, REMOVE OR HANDLE THE KINESCOPE IN ANY MANNER UNLESS SHATTERPROOF GOGGLES ARE WORN. PEOPLE NOT SO EQUIPPED SHOULD BE KEPT AWAY WHILE HANDLING KINESCOPES. KEEP THE KINESCOPE AWAY FROM THE BODY WHILE HANDLING.

The following adjustments are necessary when turning the receiver on for the first time:

VHF OPERATION ALL MODELS

1. Turn the TV-PH function switch to the TV position (2 places) and the TV power switch "ON." Advance the TV VOLUME control to approximately mid-position.
2. Set the VHF CHANNEL SELECTOR to the desired channel.
3. Adjust the VOLUME control for suitable volume.
4. Turn the BRIGHTNESS (on chassis rear) control clockwise until a pattern appears on the screen.
5. Adjust the VERTICAL hold control (on chassis rear) until the pattern stops vertical movement.
6. Adjust the VHF FINE TUNING, CONTRAST and BRIGHTNESS controls for suitable picture contrast and brightness.
7. In switching from one channel to another, it may be necessary to repeat steps 3 and 6.
8. When the set is turned on again after an idle period it should not be necessary to repeat the adjustment if the positions of the controls have not been changed. If any adjustment is necessary, step No. 6 is generally sufficient.
9. If the positions of the controls have been changed, it may be necessary to repeat steps 1 through 6.

UHF OPERATION — UHF/VHF Models Only

1. Turn the VHF channel switch to the UHF position.
2. Turn the TV-PH function switch to the TV position (2 places) and the TV power switch "ON." Advance the SOUND VOLUME control to approximately mid-position.
3. Tune in the desired UHF channel by turning the UHF TUNING control to the channel selected.
4. Repeat steps 3 through 6 as outlined under VHF operation.

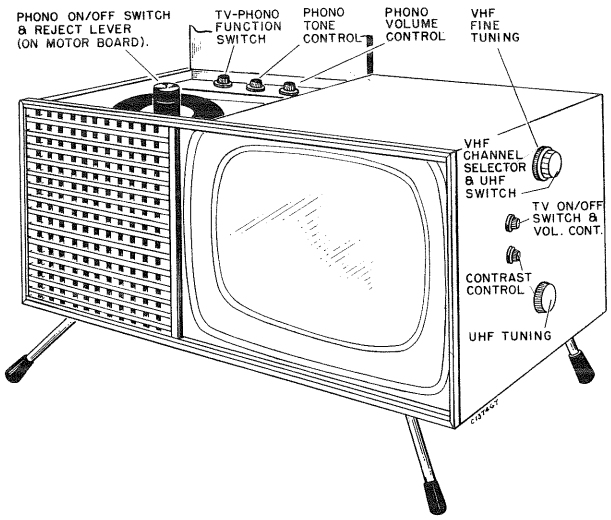

Figure 1—Receiver Operating Controls

PHONOGRAPH OPERATION

1. Turn the TV-PH function switch to the PH position.
2. Place the records on the changer centerpost.
3. Slide ON/OFF—REJECT switch on changer forward to start changer.
4. Adjust phono. VOLUME for desired volume level.
5. Adjust phono. TONE for desired tone quality.

INSTALLATION INSTRUCTIONS

UNPACKING

These receivers are shipped complete in cardboard cartons. The kinescope is shipped in place in the receiver.

Take the receiver out of the carton and remove all packing material.

Make sure that all tubes are in place and are firmly seated in their sockets.

Check to see that the kinescope high voltage lead is in place.

SERVICING PRECAUTIONS

The television chassis of these receivers are connected to one side of the AC supply. Service should not be attempted by anyone not thoroughly familiar with the precautions necessary when working on this type equipment.

1. An isolation transformer should be inserted in the power line between the receiver and the AC supply, before any service is performed on the receiver, including tube replacement.

2. R-F Oscillator adjustment requires removal of the guard and disc behind the fine tuning knob. Be sure the guard and disc are replaced after making adjustments.

3. Replacement of the channel selector detent and fine tuning shaft must be made only with the proper insulated type shafts.

4. Do not remove, or fail to replace if removed, the isolation circuits (CPR units) in the VHF and/or UHF antenna leads and between the volume and contrast control bracket and the television chassis.

5. All insulating paper shields should be reinserted in their original positions if the chassis is removed for servicing.

6. It is recommended that the receiver power plug be inserted in the proper direction, to connect the chassis to the ground side of the AC supply. Check with an AC volt meter between the television chassis and the power source ground. No reading should be obtained, if a reading is obtained, reverse the power plug and recheck for zero meter reading.

7. A final check should be made when servicing the receiver, to insure that nothing is shorting between the television receiver chassis and the control mounting bracket, and that the phono amplifier chassis or record changer are not shorted to the AC supply. A reading should be taken from the television control bracket, the phono amplifier chassis and the phonograph motorboard to both sides of the AC line. No reading should be obtained. When a VTVM is used for measurement a 1200 ohm resistor should be connected across the meter input.

ANTENNA INPUT

VHF Models

The KRK46N tuner unit is designed for VHF reception only with a 300 ohm antenna input provided. Connect the lead-in from the antenna to the antenna terminals on the rear of the receiver.

UHF/VHF Models

The KRK47N/64F tuner is designed for UHF/VHF reception with separate 300 ohm antenna inputs provided. Connect the lead-ins from the VHF and UHF antennas to their respective terminals on the rear of the receiver.

TELEVISION CHASSIS REMOVAL

Remove the control knobs at the side of the receiver. Remove the rear cover from the cabinet. Reach in from the cabinet rear and remove the springs holding the guards around the VHF and UHF channel selector shafts. Lift the guards out of their openings.

Remove the screw at the rear of the chassis brace at the cabinet top. Remove the six screws holding the chassis in position at the bottom.

Move the entire chassis and kinescope assembly to the right sufficiently to clear the control shaft openings at the left side of the cabinet. Slide the assembly to the rear until the top chassis brace disengages from the front rail at the cabinet top. At this point the control shafts will be back to the left frame at the cabinet rear. Swing the chassis farther to the right to clear the frame with the control shafts, then pull to the rear until the shafts are clear of the cabinet. Swing the chassis to the left until it is parallel to the cabinet rear. Check that the top chassis brace engages the rear top cabinet rail and slide the assembly out of the cabinet.

KINESCOPE AND SAFETY GLASS CLEANING

The safety glass may be removed from the front of the cabinet to allow for cleaning of the safety glass and kinescope face.

Remove the two screws holding the channel at the cabinet top. Drop the right side of the channel slightly and pull to the right off the rubber retainer at the left side. Lift out the safety glass. Refer to Figure 2.

The kinescope faceplate and safety glass should be cleaned with a soft cloth and "Windex" or similar cleaning agent.

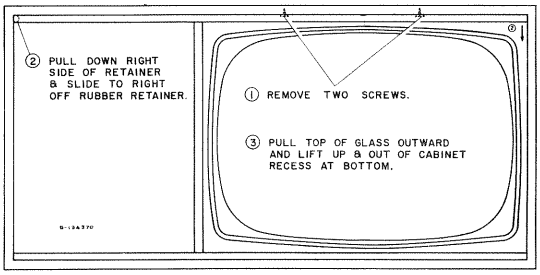

Figure 2—Kinescope and Safety Glass Cleaning

DUMMY PLUG FOR SERVICING

The dummy plug shown in Figure 3 may be used to operate the television portion of the receiver independently, if desired, from the phonograph amplifier and record changer.

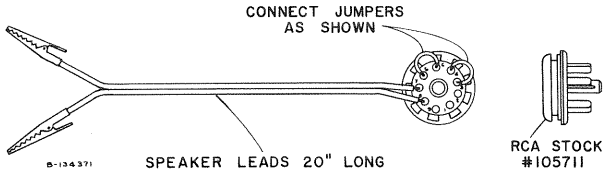

Figure 3—Dummy Plug for Servicing

RP-190C-3 RECORD CHANGER

Service procedures and replacement parts for this record changer are the same as for RP-190 Series except as indicated below. "Illustration numbers" refer to RP-190 Series Service Data Figure 42 on page 10.

STYLUS REPLACEMENT

To remove stylus, pull front end of stylus mounting clip outward away from pickup.

To install stylus, hook back end of stylus mounting clip into hole at rear of pickup, push forward and toward pickup body. Make sure shank of stylus rests in U-shaped saddle.

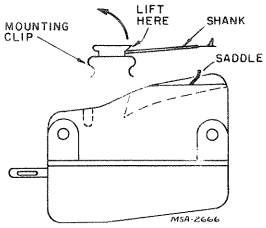

ILLUS. NO.	STOCK NO.	DESCRIPTION
7	101685	Knob—Control knob
9	101690	Motorboard—Sub-assembly complete with all welded and staked parts
14	101684A	Cap—Spindle nose cap
15	75753	Turntable—Shaft and turntable (black) with disc
16	79791	Pickup—Ceramic pickup complete with stylus
16C	79849	Stylus—1 mil synthetic sapphire stylus
24	101692A	Arm—Tone arm shell only antique white
25	79792	Cable—3 wire pickup cable complete with connectors
26	74337	Nut—Speed nut to retain pickup cable (rear)
27	32943	Nut—Speed nut to retain pickup cable (center)
31	74060	Spring — Counterbalance spring (.171" O.D. x .695" 43 turns)
32	77572	Swivel—Swivel and counterbalance assembly
36	75752	Washer—Steel thrust washer
43	79853	Spring—Idler wheel tension spring
47	45990	Washer—"C" washer for mounting motor assembly and ratchet wheel
48	105842	Motor—Drive motor only
56	45990	Washer—"C" washer for mounting motor assembly and ratchet wheel
58	76692	Link—External tooth lockwasher for cycling slide mounting bracket
60	75732	Housing—"On-Off" switch housing less switch
60A	75733	Switch—"On-Off" switch less housing
61	76408	Screw—#8-¼" self tapping hex head for "on-off" switch housing
72A	31048	Connector—Pin type for audio cable
74	75731	Rod—Tone arm elevating rod
82	76101	Slide—Cycling slide complete with stop and safety lever — less cam wheel, safety spring, stop dog spring, stop dog adjustment stud
84	45990	Washer—"C" washer for mounting motor assembly and ratchet wheel

The following items shown in the RP190 Series replacement parts list are not used in the RP190C-3 changer:—Items 16A, 16B, 16D, 18, 19, 23, 23A, 24A, 24B, 28, 29, 82A, 82B and 92.

REFER TO SERVICE DATA 1957 No. T5 (MODEL 14-PD-8053(U) SERIES) FOR COMPLETE SERVICE INFORMATION COVERING INSTALLATION, SET-UP AND ALIGNMENT OF THESE RECEIVERS. THE TELEVISION CHASSIS OF MODELS 14-VT-8155 & U AND 14-VT-8157 & U (CHASSIS KCS111F OR H) ARE IDENTICAL TO CHASSIS KCS-111C OR D IN THE ABOVE SERVICE DATA EXCEPT AS SHOWN IN THIS PUBLICATION. REFER TO RP190 SERIES SERVICE DATA (1950 No. 14) AND SEE INFORMATION ABOVE FOR RP-190C-3 RECORD CHANGER.

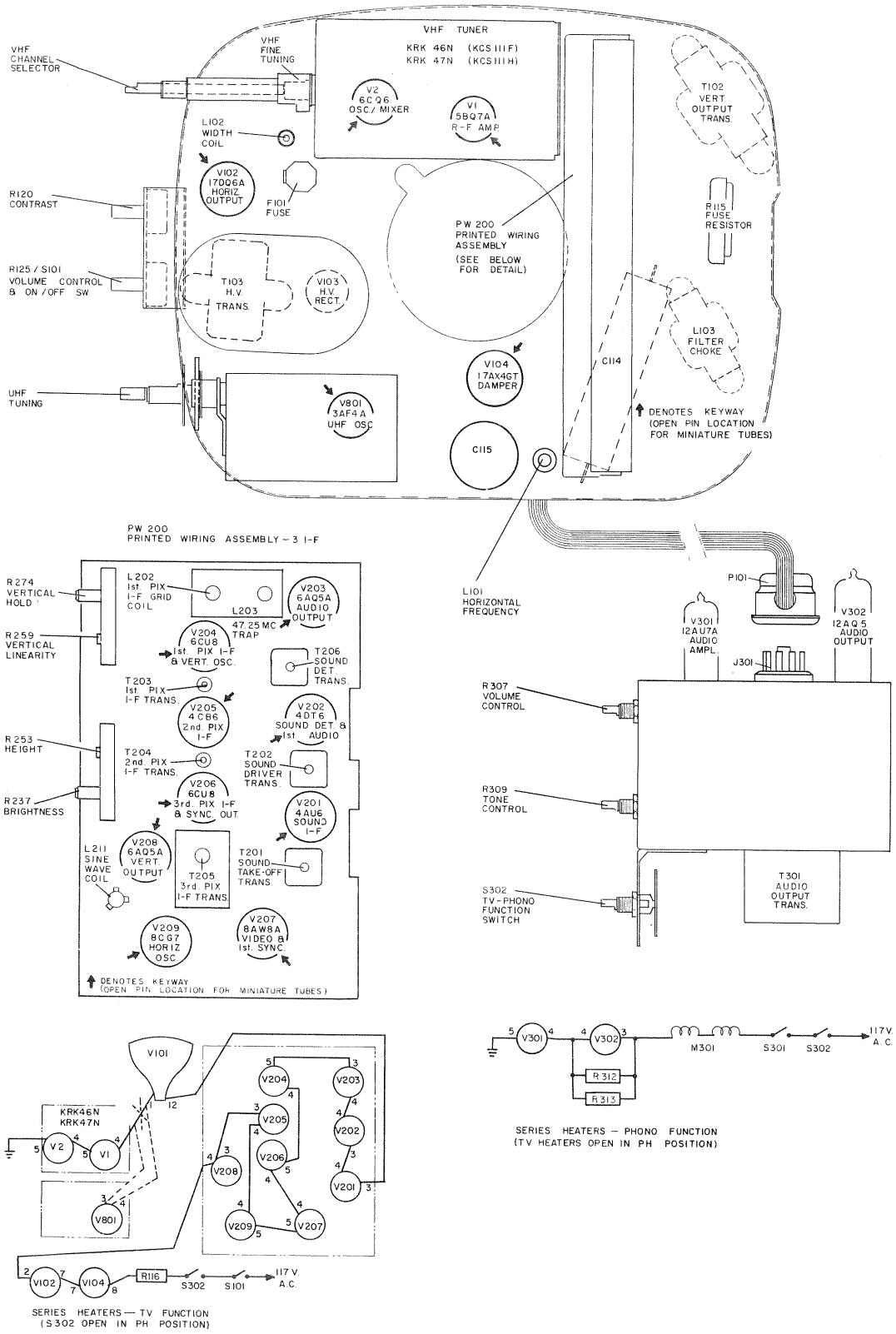

Figure 4—Chassis Rear View

KRK46N VHF TUNER CIRCUIT SCHEMATIC DIAGRAM
(For KCS111F Chassis — VHF Models)

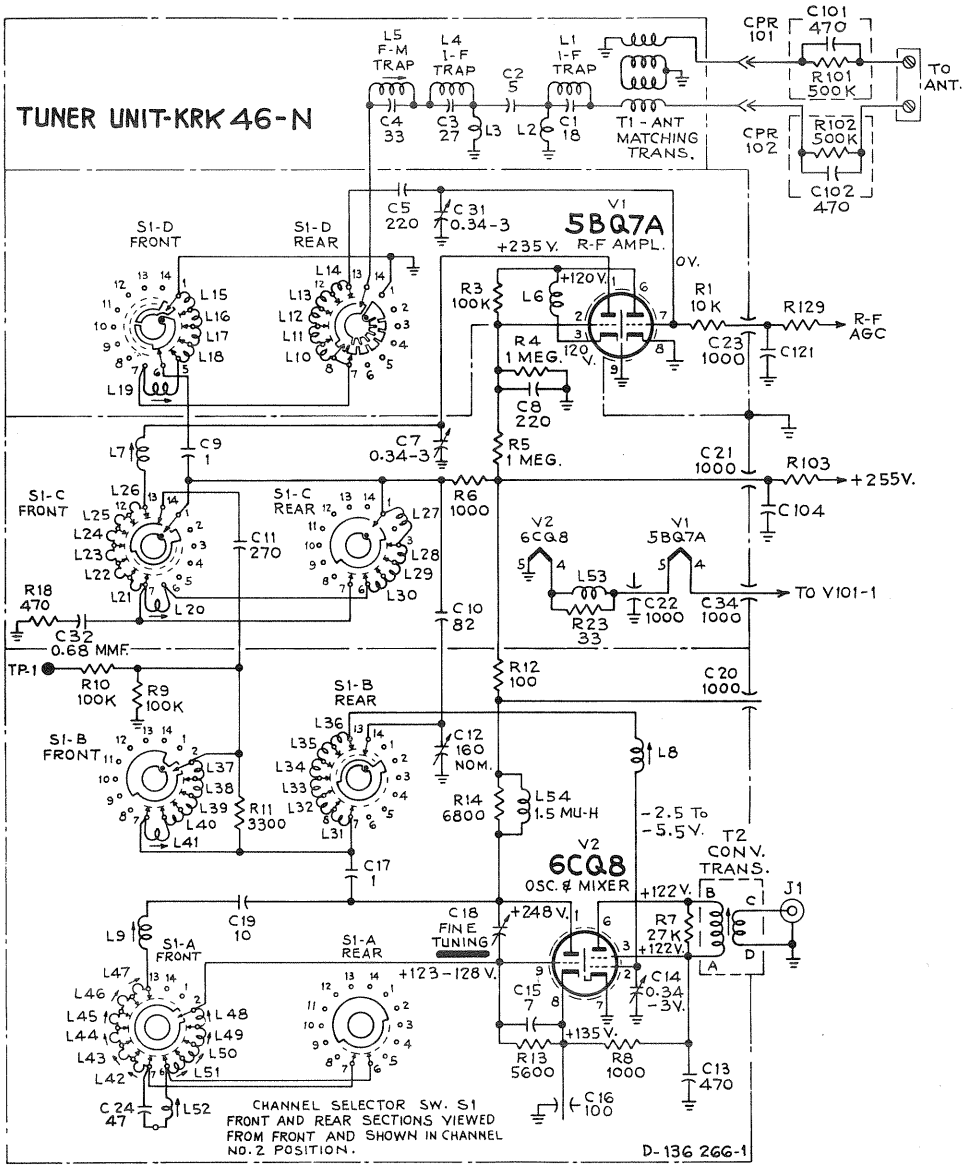

Figure 5—Tuner Circuit Schematic Diagram for KCS111F Chassis

NOTE: The KCS111F chassis listed above is identical to that shown in large schematic Figure 7, except for the tuner which is a KRK-46N, shown in schematic above. All schematic notes also pertain to these chassis for the equivalent VHF model.

REFER TO TABLE ON PAGE 2 FOR MODEL, CHASSIS AND TUNER CROSS-REFERENCE.

CUT ALONG THIS LINE

CHASSIS CIRCUIT SCHEMATIC
(See Reverse Side for KRK46N Tu

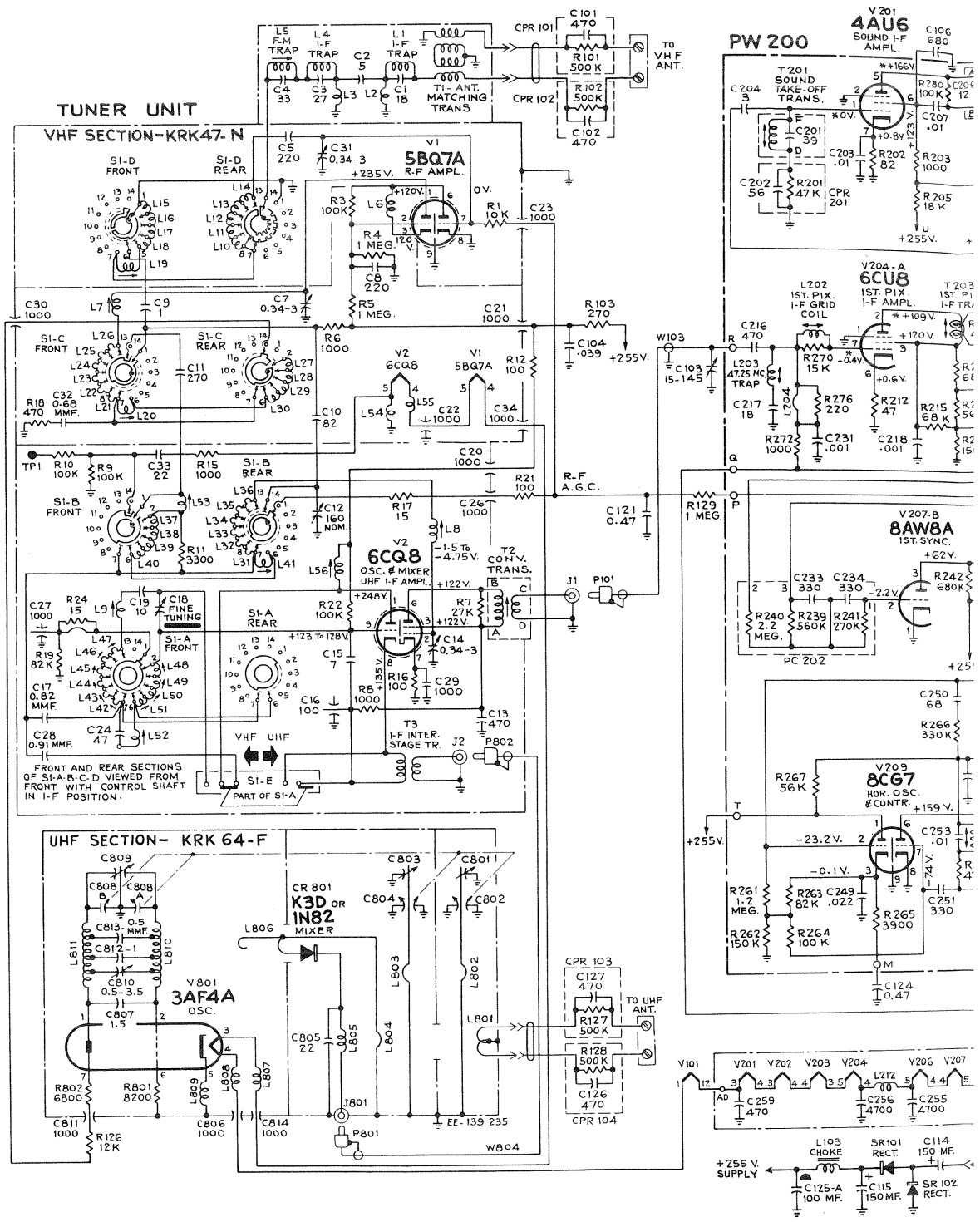

Important Warning and

THE TELEVISION CHASSIS OF THESE RECEIVERS ARE CONNECTED TO ONE SIDE OF THE AC SUPPLY. SERVICE SHOULD NOT BE ATTEMPTED BY ANYONE NOT THOROUGHLY FAMILIAR WITH THE PRECAUTIONS NECESSARY WHEN WORKING ON THIS TYPE EQUIPMENT.

1. AN ISOLATION TRANSFORMER SHOULD BE INSERTED IN THE POWER LINE BETWEEN THE RECEIVER AND THE AC SUPPLY, BEFORE ANY SERVICE IS PERFORMED ON THE RECEIVER, INCLUDING TUBE REPLACEMENT.

2. R-F OSCILLATOR ADJUSTMENT REQUIRES REMOVAL OF THE GUARD AND INSULATING DISC BEHIND THE FINE TUNING KNOB. BE SURE THE GUARD AND DISC ARE REPLACED AFTER MAKING ADJUSTMENTS.

3. REPLACEMENT OF THE CHANNEL SELECTOR DETENT AND FINE TUNING SHAFT MUST BE MADE ONLY WITH THE PROPER INSULATED TYPE SHAFTS.

4. THE ISOLATING RESISTOR AND CAPACITOR CIRCUITS IN SERIES WITH THE ANTENNA LEADS MUST BE REPLACED IF REMOVED FOR ANY REASON. REFER TO SCHEMATIC DIAGRAM ABOVE.

S CIRCUIT SCHEMATIC DIAGRAM KCS111F & KCS111H
erse Side for KRK46N Tuner Used in KCS111F VHF Chassis)

14-VT-8155U & 14-VT-8157U

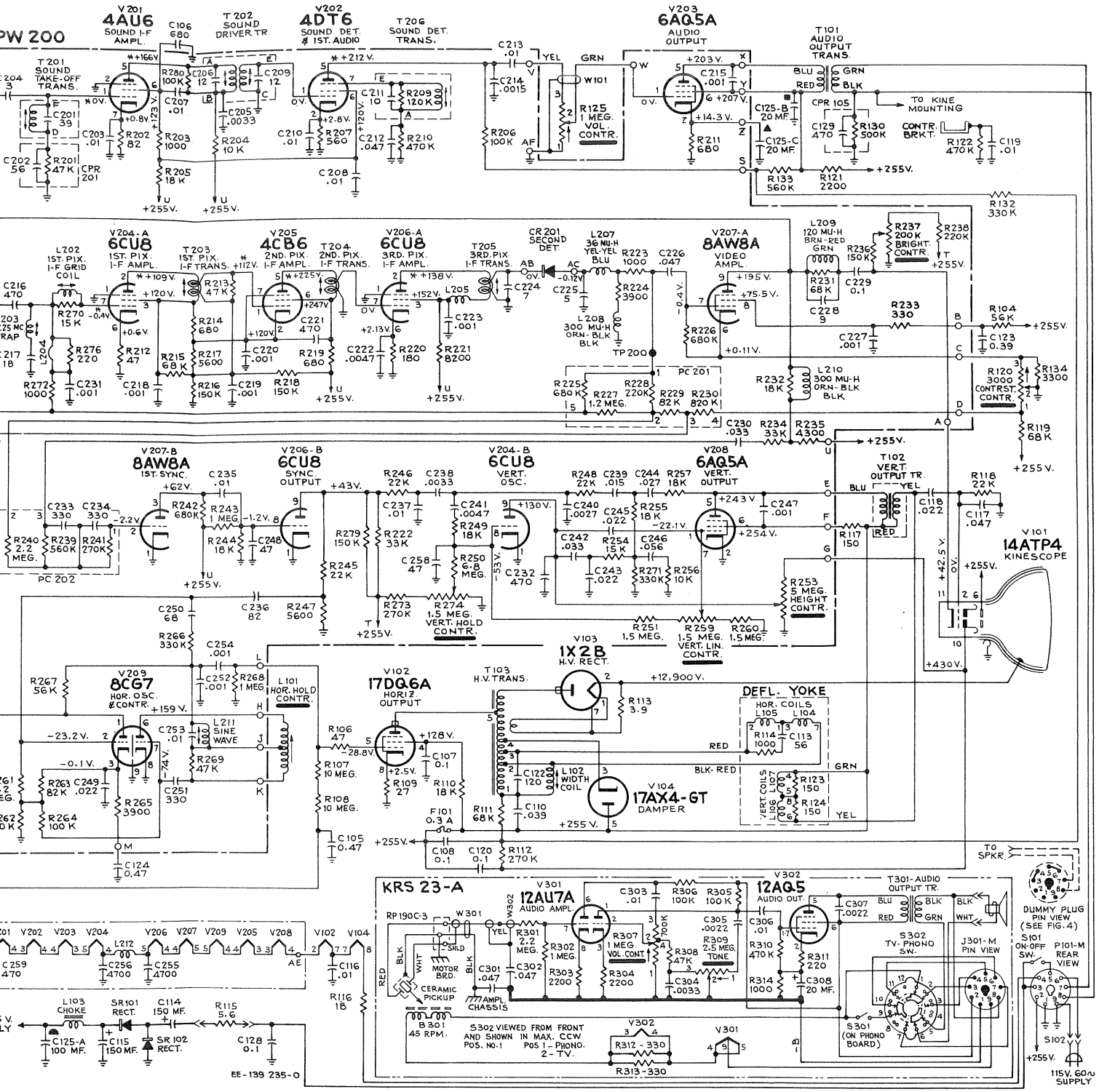

Warning and Service Precautions . . .

PPLY. SERVICE SHOULD
ESSARY WHEN WORKING

RECEIVER AND THE AC
ENT.

DISC BEHIND THE FINE
.

E MADE ONLY WITH THE

ADS MUST BE REPLACED

5. REPLACE ALL INSULATING PAPER SHIELDS IN THEIR ORIGINAL POSITIONS IF THE CHASSIS IS REMOVED FOR SERVICING.

6. THE VOLUME AND CONTRAST CONTROLS ARE MOUNTED ON A BRACKET ISOLATED FROM THE CHASSIS. DO NOT REMOVE, OR FAIL TO REPLACE IF REMOVED, THE ISOLATING RESISTOR AND CAPACITOR BETWEEN THE BRACKET AND THE CHASSIS.

7. IT IS RECOMMENDED THAT THE RECEIVER POWER PLUG BE INSERTED IN THE PROPER DIRECTION, TO CONNECT THE CHASSIS TO THE GROUND SIDE OF THE AC SUPPLY. CHECK WITH AN AC VOLTMETER BETWEEN THE TELEVISION CHASSIS AND THE POWER SOURCE GROUND. NO READING SHOULD BE OBTAINED. IF A READING IS OBTAINED, REVERSE THE POWER PLUG AND RECHECK FOR ZERO METER READING.

8. A FINAL CHECK SHOULD BE MADE WHEN SERVICING THE RECEIVER, TO INSURE THAT NOTHING IS SHORTING BETWEEN THE CONTROL MOUNTING BRACKET AND THE TELEVISION CHASSIS, AND THAT THE PHONO AMPLIFIER CHASSIS OR CHANGER IS NOT SHORTED TO THE AC SUPPLY. A READING TAKEN FROM THE CONTROL BRACKET, THE AMPLIFIER OR THE PHONO MOTORBOARD TO EITHER SIDE OF THE AC LINE, SHOULD SHOW NO READING ON THE METER. WHEN A VTVM IS USED A 1200 OHM RESISTOR SHOULD BE CONNECTED ACROSS THE METER INPUT.

ED FOR

OO NOT
ET AND

ONNECT
EVISION
ED, RE-

ORTING
PLIFIER
ET. THE
ON THE

FIELD SERVICE DATA SHEET

14-VT-8155
14-VT-8155U
SERIES

KCS111F, H

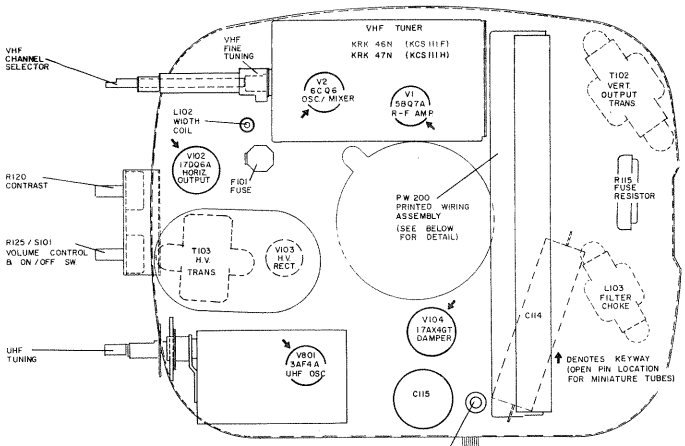

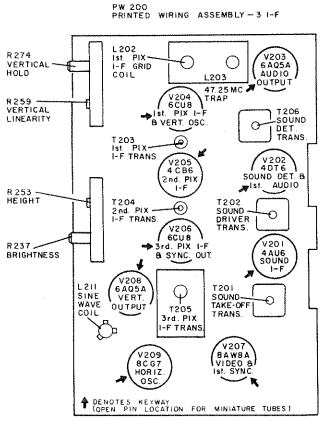

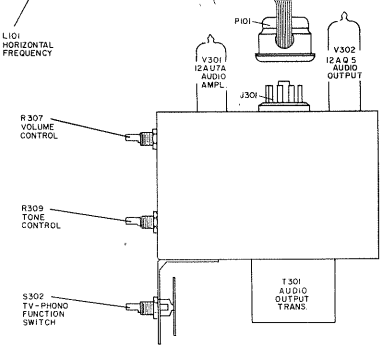

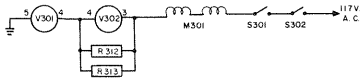

SERIES HEATERS – PHONO FUNCTION
(TV HEATERS OPEN IN PH POSITION)

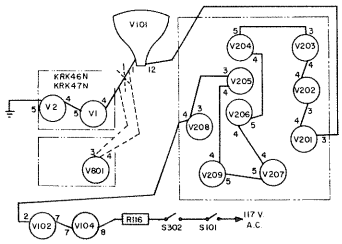

SERIES HEATERS — TV FUNCTION
(S302 OPEN IN PH POSITION)

CHASSIS REAR VIEW

WIDTH AND SINEWAVE ADJUSTMENTS

It is possible to adjust the horizontal sine wave in the field by the following method when such adjustment is indicated.

A. Adjust width for ½" overscan at each side, with normal line voltage and normal brightness.

B. Turn horizontal hold control to the left, out of sync, to the point where interrupted oscillation occurs.

C. Adjust sinewave core, as the horizontal hold control is rotated to the left beyond the locked-in position, until 3 bars occur between the fall out point and interrupted oscillation.

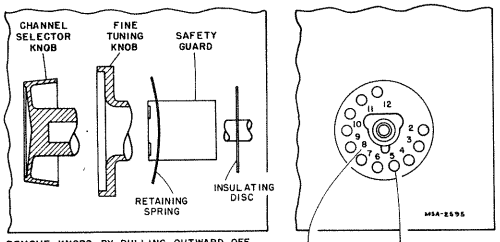

REMOVE KNOBS BY PULLING OUTWARD OFF SHAFT – REMOVE REAR PANEL & RELEASE SPRING HOLDING METAL GUARD – LIFT OUT SAFETY GUARD & REMOVE INSULATING DISC.

R-F OSCILLATOR ADJUSTMENTS

PREPARED BY COMMERCIAL SERVICE
RCA SERVICE CO., INC.
CAMDEN 8, N. J.
FOR

RADIO CORPORATION OF AMERICA
RCA VICTOR TELEVISION DIVISION

First Edition—First Printing 10-11-57

Tmks. ® Reg. U. S. Pat. Off.

Printed in U. S. A.

14-VT-8155
14-VT-8155U
SERIES

FIELD SERVICE DATA SHEET

PRINTED WIRING UNIT LAYOUT

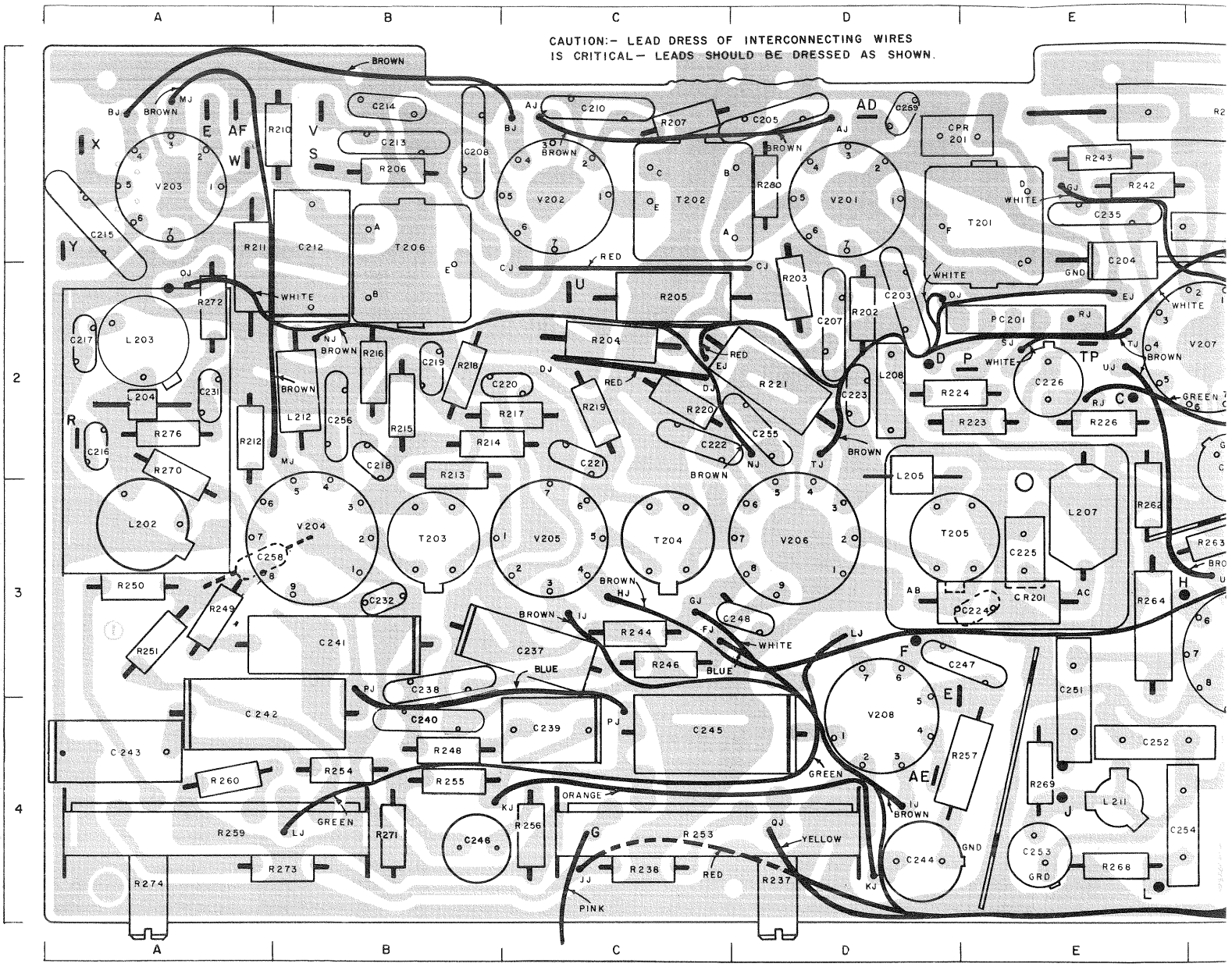

COMPONENT LOCATION GUIDE

C203	D2	C225	E3	C246	B4	L203	A2	R207	C1	R232	F2	R254	B4	R273	B4
C204	E2	C226	E2	C247	E3	L204	A2	R210	B1	R233	F2	R255	B4	R274	A4
C205	D1	C227	F2	C248	D3	L205	D2	R211	A1	R234	F1	R256	C4	R276	A2
C207	D2	C228	F2	C249	F2	L207	E3	R212	A2	R235	F1	R257	E4	R277	E1
C208	B1	C229	F2	C250	F3	L208	D2	R213	B2	R236	F2	R258	D3	R278	F4
C210	C1	C230	F1	C251	E4	L209	F1	R214	B2	R237	D4	R259	A4	R279	F4
C212	B1	C231	A2	C252	E4	L210	F1	R215	B2	R238	C4	R260	A4	R280	D2
C213	B1	C232	B3	C253	E4	L211	E4	R216	B2	R242	E1	R261	F3		
C214	B1	C235	E1	C254	E4	L212	B2	R217	C2	R243	E1	R262	E3	T201	E1
C215	A1	C236	F3	C255	D2	L213	E1	R218	B2	R244	C3	R263	F3	T202	C1
C217	A2	C237	C3	C256	B2			R219	C2	R245	F4	R264	E3	T203	B3
C218	B2	C238	B3	C258	A3	PC201	E2	R220	C2	R246	C3	R265	F3	T204	C3
C219	B2	C239	C4	C259	D1	PC202	F1	R221	D2	R247	F3	R266	F4	T205	D3
C220	C2	C240	B4					R222	F4	R248	B4	R267	F4	T206	B2
C221	C2	C241	B3	CPR201	E1	R202	D2	R223	E2	R249	A3	R268	E4		
C222	C2	C242	A4			R203	D2	R224	D2	R250	A3	R269	E4		
C223	D2	C243	A4	CR201	E3	R204	C2	R226	E2	R251	A3	R270	A2		
C224	E3	C244	D4			R205	C2	R231	F1	R253	C4	R272	A2		
				L202	A3	R206	B1								

TELEVISION CHAS

Remove the control knobs at the
rear cover from the cabinet. Reach
remove the springs holding the gu
channel selector shafts. Lift the gua

Remove the screw at the rear of
top. Remove the six screws holding
bottom.

Move the entire chassis and kines
ciently to clear the control shaft o
cabinet. Slide the assembly to the
disengages from the front rail at th
control shafts will be back to the left
the chassis farther to the right to c
shafts, then pull to the rear until the
Swing the chassis to the left until it
Check that the top chassis brace er
and slide the assembly out of the cab

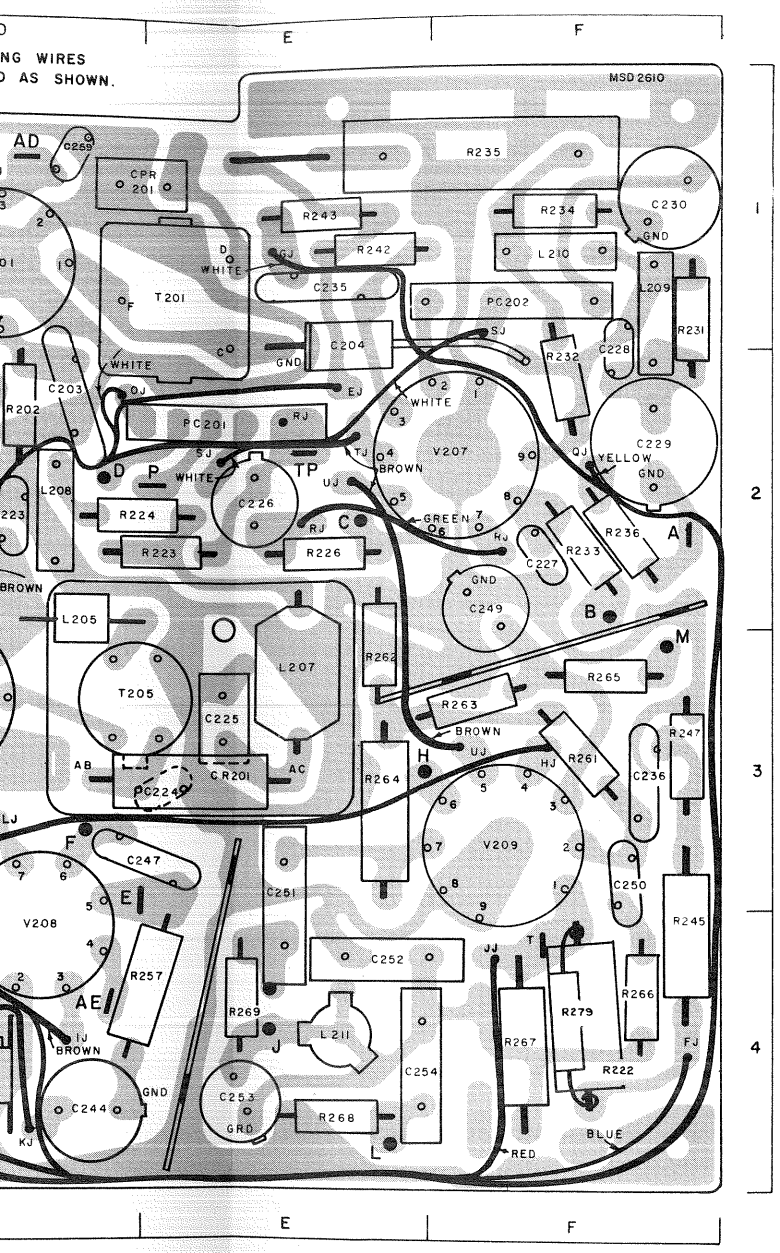

KRK46N TUNER CIRCUIT SCHEMATIC DIAGRAM FOR KCS111F VHF CHASSIS

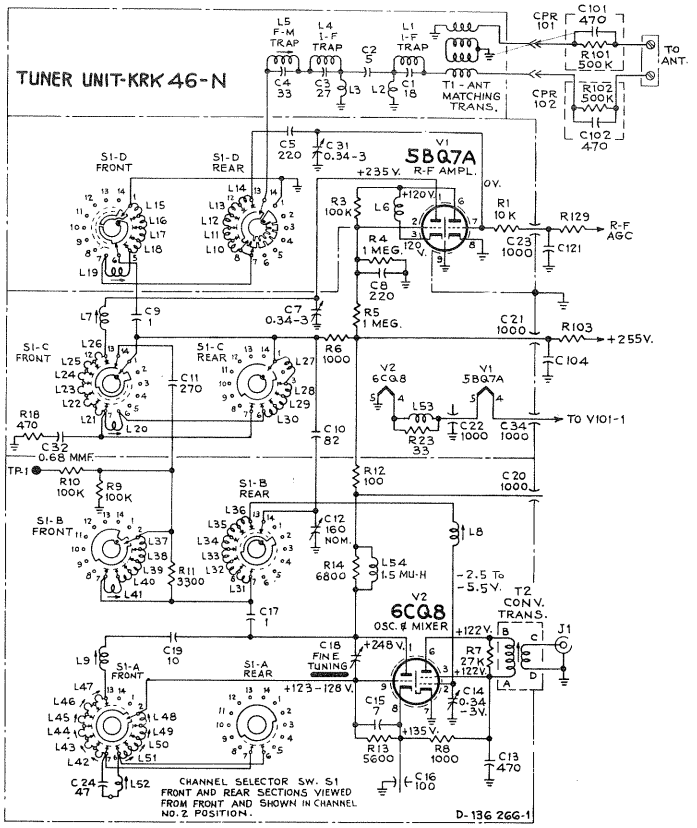

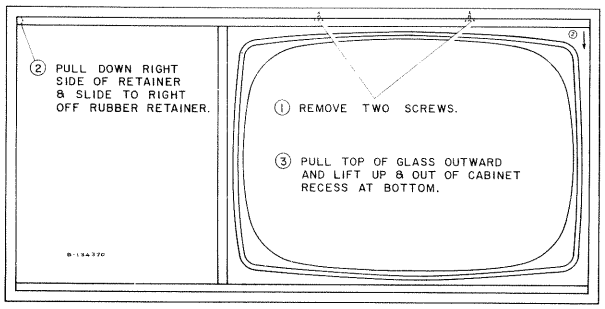

SAFETY GLASS REMOVAL

.B4
.A4
.A2
.E1
.F4
.F4
.D2

.E1
.C1
.B3
.C3
.D3
.B2

TELEVISION CHASSIS REMOVAL

Remove the control knobs at the side of the receiver. Remove the rear cover from the cabinet. Reach in from the cabinet rear and remove the springs holding the guards around the VHF and UHF channel selector shafts. Lift the guards out of their openings.

Remove the screw at the rear of the chassis brace at the cabinet top. Remove the six screws holding the chassis in position at the bottom.

Move the entire chassis and kinescope assembly to the right sufficiently to clear the control shaft openings at the left side of the cabinet. Slide the assembly to the rear until the top chassis brace disengages from the front rail at the cabinet top. At this point the control shafts will be back to the left frame at the cabinet rear. Swing the chassis farther to the right to clear the frame with the control shafts, then pull to the rear until the shafts are clear of the cabinet. Swing the chassis to the left until it is parallel to the cabinet rear. Check that the top chassis brace engages the rear top cabinet rail and slide the assembly out of the cabinet.

KINESCOPE AND SAFETY GLASS CLEANING

The safety glass may be removed from the front of the cabinet to allow for cleaning of the safety glass and kinescope face.

Remove the two screws holding the channel at the cabinet top. Drop the right side of the channel slightly and pull to the right off the rubber retainer at the left side. Lift out the safety glass. Refer to diagram on this page.

The kinescope faceplate and safety glass should be cleaned with a soft cloth and "Windex" or similar cleaning agent.

14-VT-8155
14-VT-8155U
SERIES

FIELD SERVICE DATA SHEET

REPLACEMENT PARTS (Partial Listing)

SYMBOL NO.	STOCK NO.	DESCRIPTION
		CHASSIS ASSEMBLIES KCS111F & KCS111H
C103	104392	Capacitor—Mica, trimmer, 15-145 mmf., 350 v.
C104	105479	Capacitor—Fixed, ceramic, .039 mf., +100 —0%, 500 v.
C106	104135	Capacitor—Fixed, ceramic, 680 mmf., ±20% 500 v.
C116	73960	Capacitor—Fixed, ceramic, .01 mf., +100 —0%, 500 v.
C119	100910	Capacitor—Fixed, ceramic, .01 mf., +100 —0%, 1000 v.
C122	79532	Capacitor—Fixed, ceramic, 120 mmf., ±10%, 3500 v.
F101	102164	Fuse—0.3 amp.
R109	104389	Resistor—Fixed, wire wound, 27 ohms, ±10%, 1 w.
R113	103030	Resistor—Fixed, wire wound, 3.9 ohms, ±10%, ½ w.
R115	100117	Resistor—Fuse type, 5.6 ohms, 5 w.
R116	104390	Resistor—Fixed, wire wound, 18 ohms, ±10%, 7 w.
R120	104484	Control—Contrast control
R125	104195	Control—On-Off volume. Includes S101
SR101, SR102	100035	Rectifier—Selenium
T103	103092	Transformer—High voltage
	79533	Knob—Horizontal frequency coil knob
		PW200—Printed Wiring Assembly
C203	73960	Capacitor—Fixed, ceramic, .01 mf., +100 —0%, 500 v.
C204	104204	Capacitor—Fixed, ceramic, 3 mmf., ±1 mmf., 1000 v.
C205	104205	Capacitor—Fixed, ceramic, .0033 mf., ±10%, 500 v.
C207, C208	73960	Same as C203
C210	73960	Same as C203
C213	73960	Same as C203
C214	104207	Capacitor—Fixed, ceramic, .0015 mf., ±20%, 500 v.
C215	105778	Capacitor—Fixed, ceramic, .001 mf., ±10%, 1000 v.
C216	77293	Capacitor—Fixed, ceramic, 470 mmf., +100 —0%, 500 v.
C217	103133	Capacitor—Fixed, ceramic, 18 mmf., ±5%, 500 v.
C218	102234A	Capacitor—Fixed, ceramic, .001 mf., ±20%, 500 v.
C219, C220	77252	Capacitor—Fixed, ceramic, .001 mf., +100 —0%, 500 v.
C221	78622	Capacitor—Fixed, ceramic, 470 mmf., ±20%, 500 v.
C222	73473	Capacitor—Fixed, ceramic, .0047 mf., +100 —0%, 500 v.
C223	102234A	Same as C218
C224	104177	Capacitor—Fixed, ceramic, 7 mmf., ±0.5 mmf., 500 v.
C225	104178	Capacitor—Fixed, ceramic, 5 mmf., ±0.5 mmf., 500 v.
C227	77252	Same as C219
C228	104211	Capacitor—Fixed, ceramic, 9 mmf., ±.05 mmf., 500 v.
C231	77252	Same as C219
C232	77293	Same as C216
C235	73960	Same as C203
C236	104214	Capacitor—Fixed, ceramic, 82 mmf., ±5%, 500 v.
C238	104205	Same as C205
C240	104131	Capacitor—Fixed, ceramic, .0027 mf., ±10%, 500 v.

SYMBOL NO.	STOCK NO.	DESCRIPTION
C247	104222	Capacitor—Fixed, ceramic, .001 mf., ±10%, 2000 v.
C248	102882	Capacitor—Fixed, ceramic, 47 mmf., ±10%, 500 v.
C250	104224	Capacitor—Fixed, ceramic, 68 mmf., ±5%, 500 v.
C251	104225	Capacitor—Fixed, mica, 330 mmf., ±5%, 1000 v.
C252	104226	Capacitor—Fixed, mica, .001 mf., ±5%, 500 v.
C254	104226	Capacitor—Fixed, mica, .001 mf., ±10%, 500 v.
C255, C256	73473	Same as C222
C258	102882	Same as C248
C259	77293	Same as C216
CR201	105517	Rectifier—Crystal
R235	104201	Resistor—Fixed, wire wound, 4300 ohms, ±10%, 5 w.
R237	104202	Control—Height and brightness
R253	104202	Same as R237
R259	104203	Control—Vertical linearity and vertical hold
R274	104203	Same as R259
		KRS23A PHONO AMPLIFIER ASSEMBLY
R307	105708	Control—Volume
R309	105709	Control—Tone
		YOKE AND MAGNET ASSY.
C113	104617	Capacitor—Fixed, ceramic, 56 mmf., ±10%, 2500 v.
	104369	Yoke — Deflection yoke assembly. Includes: C113, L104 to L107 Incl., R114, R123, R124
		MISCELLANEOUS
	103075	Cable—Power cable and plug
	103078	Knob—Contrast and volume control knob — black — for mahogany grain Models 14VT8155 & U
	103077	Knob—Contrast and volume control knob — gravel tan — for oak grain Models 14VT8157 & U
	104349	Knob—Fine tuning — black — for mahogany grain Models 14VT8155 & U
	104351	Knob—Fine tuning — gravel tan — for oak grain Models 14VT8157 & U
	105699	Knob—T.V. — phono or tone control knob — taupe
	103069	Knob—UHF channel selector — black — for mahogany grain Models 14VT8155U
	103068	Knob—UHF channel selector — gravel tan — for oak grain Models 14VT8157U
	104525	Knob—UHF dial escutcheon — black — for mahogany grain Models 14VT8155U
	104527	Knob—UHF dial escutcheon — gravel tan — for oak grain Models 14VT8157U
	104343	Knob—VHF channel selector — black — for mahogany grain Models 14VT8155
	104345	Knob—VHF channel selector — gravel tan — for oak grain Models 14VT8157
	104346	Knob—VHF channel selector — black — with "UHF" marking for mahogany grain Models 14VT8155U
	104348	Knob—VHF channel selector — gravel tan — with "UHF" marking for oak grain Models 14VT8157U
	100652B	Knob—Volume control knob—taupe
	104367A	Shaft—Brightness and vertical hold extension shaft

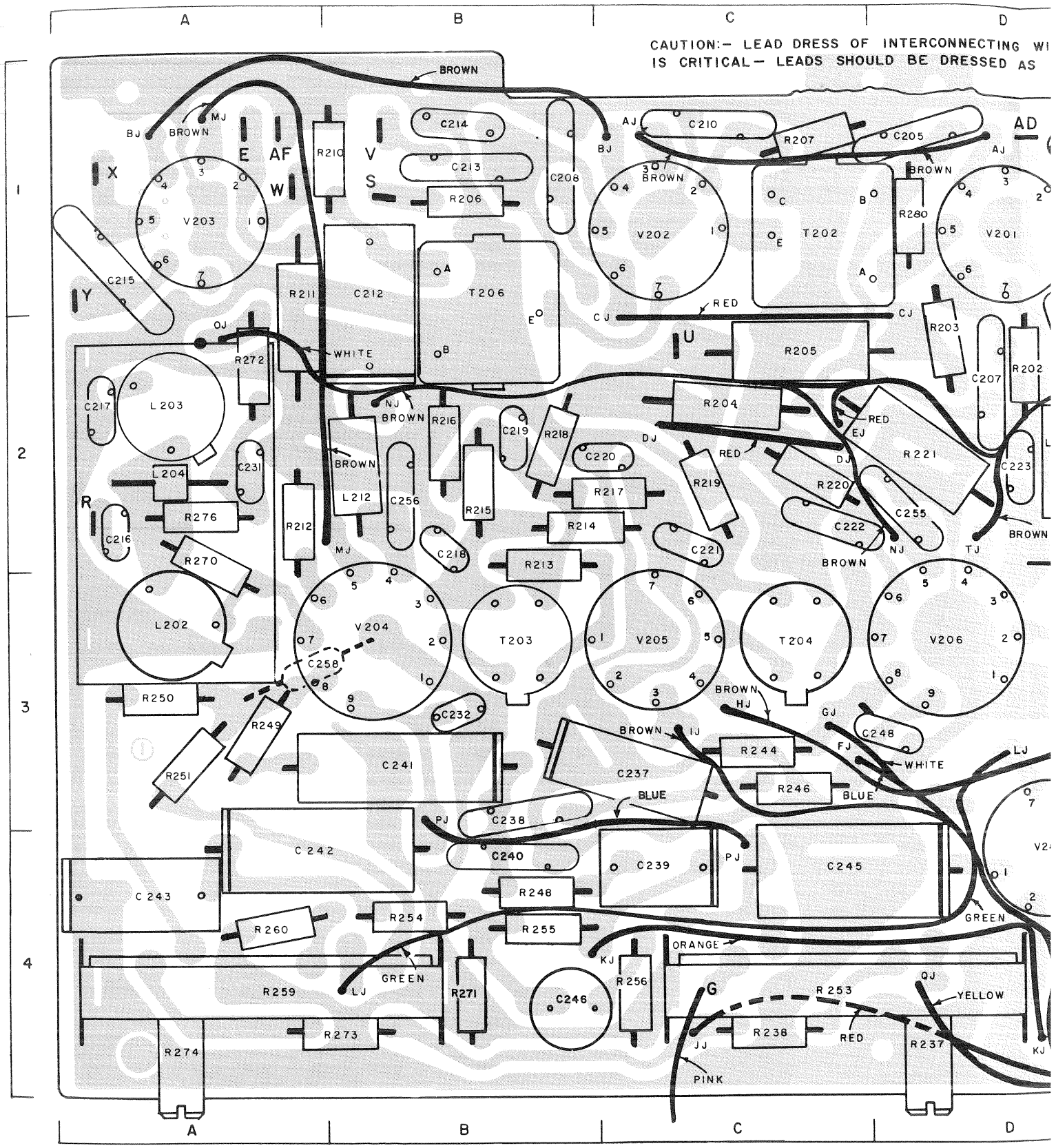

Figure 6—KCS111F and KCS111H Printed W

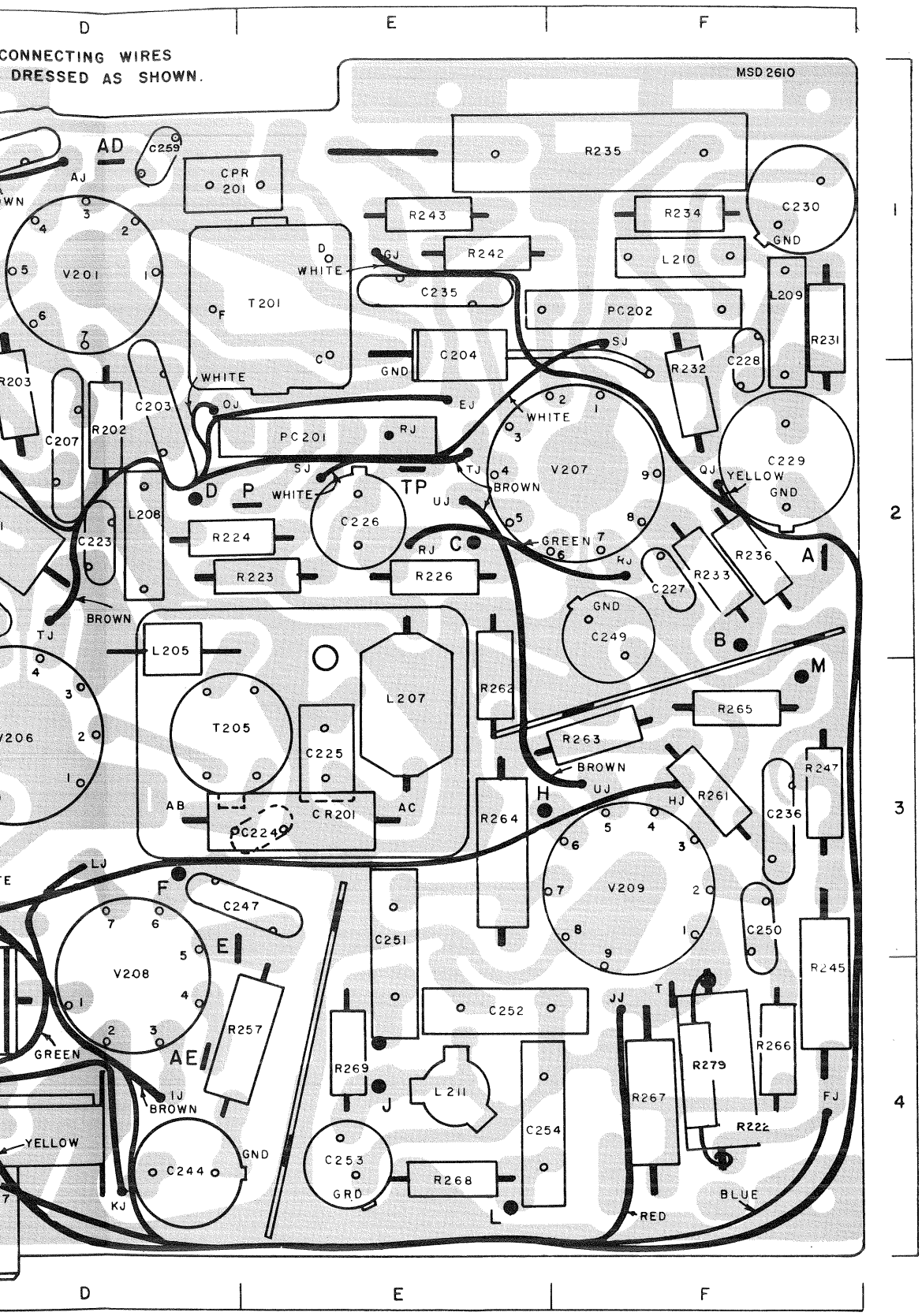

COMPONENT LOCATION GUIDE

C203 .....D2	R205 .....C2
C204 .....E2	R206 .....B1
C205 .....D1	R207 .....C1
C207 .....D2	R210 .....B1
C208 .....B1	R211 .....A1
C210 .....C1	R212 .....A2
C212 .....B1	R213 .....B2
C213 .....B1	R214 .....B2
C214 .....B1	R215 .....B2
C215 .....A1	R216 .....B2
C217 .....A2	R217 .....C2
C218 .....B2	R218 .....B2
C219 .....B2	R219 .....C2
C220 .....C2	R220 .....C2
C221 .....C2	R221 .....D2
C222 .....C2	R222 .....F4
C223 .....D2	R223 .....E2
C224 .....E3	R224 .....D2
C225 .....E3	R226 .....E2
C226 .....E2	R231 .....F1
C227 .....F2	R232 .....F2
C228 .....F2	R233 .....F2
C229 .....F2	R234 .....F1
C230 .....F1	R235 .....F1
C231 .....A2	R236 .....F2
C232 .....B3	R237 .....D4
C235 .....E1	R238 .....C4
C236 .....F3	R242 .....E1
C237 .....C3	R243 .....E1
C238 .....B3	R244 .....C3
C239 .....C4	R245 .....F4
C240 .....B4	R246 .....C3
C241 .....B3	R247 .....F3
C242 .....A4	R248 .....B4
C243 .....A4	R249 .....A3
C244 .....D4	R250 .....A3
C246 .....B4	R251 .....A3
C247 .....E3	R253 .....C4
C248 .....D3	R254 .....B4
C249 .....F2	R255 .....B4
C250 .....F3	R256 .....C4
C251 .....E4	R257 .....E4
C252 .....E4	R258 .....D3
C253 .....E4	R259 .....A4
C254 .....E4	R260 .....A4
C255 .....D2	R261 .....F3
C256 .....B2	R262 .....E3
C258 .....A3	R263 .....F3
C259 .....D1	R264 .....E3
CPR201 ....E1	R265 .....F3
	R266 .....F4
CR201 .....E3	R267 .....F4
L202 .....A3	R268 .....E4
L203 .....A2	R269 .....E4
L204 .....A2	R270 .....A2
L205 .....D2	R272 .....A2
L207 .....E3	R273 .....B4
L208 .....D2	R274 .....A4
L209 .....F1	R276 .....A2
L210 .....F1	R277 .....E1
L211 .....E4	R279 .....F4
L212 .....B2	R280 .....D2
L213 .....E1	
PC201 .....E2	T201 .....E1
PC202 .....F1	T202 .....C1
	T203 .....B3
R202 .....D2	T204 .....C3
R203 .....D2	T205 .....D3
R204 .....C2	T206 .....B2

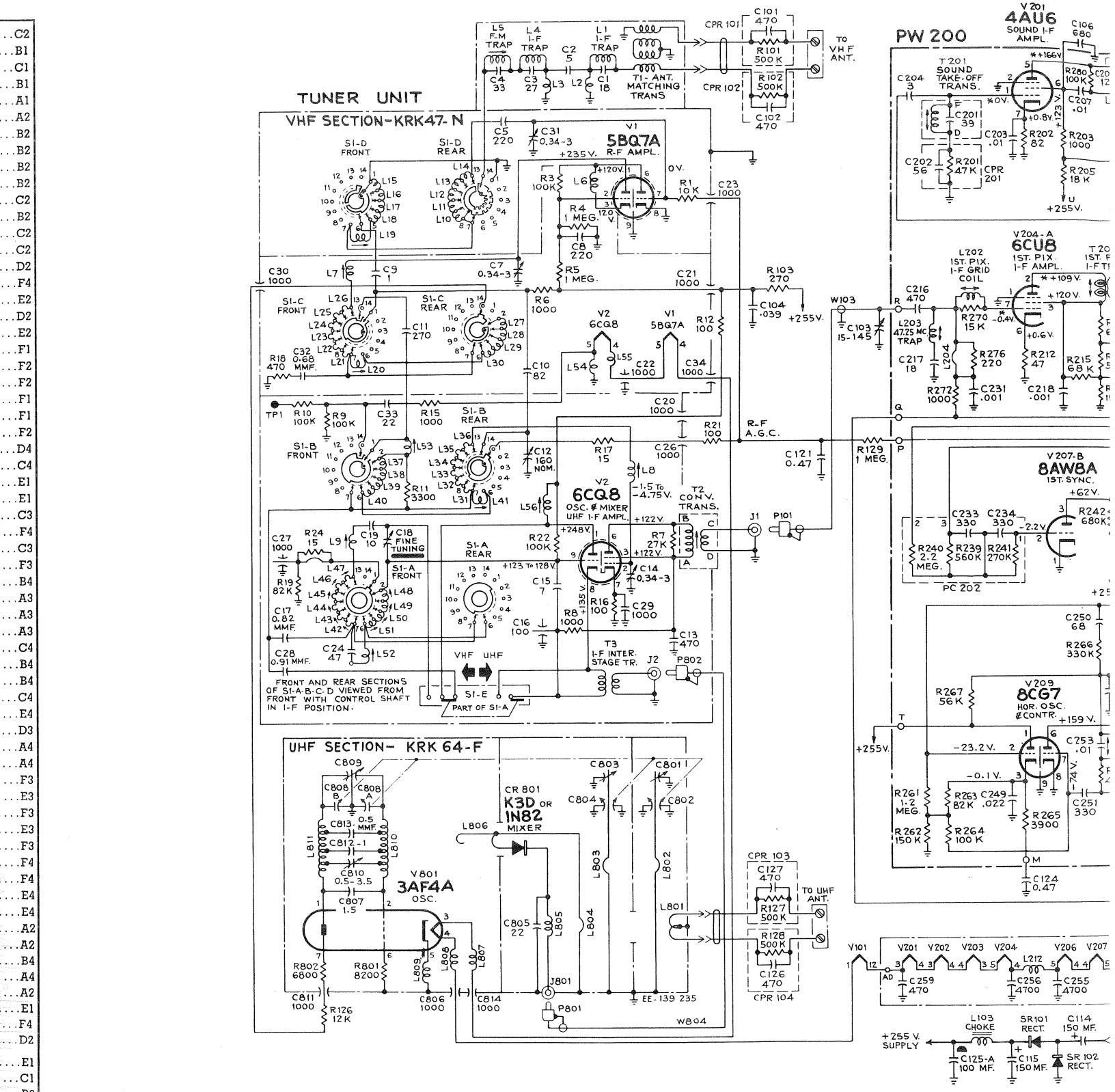

The schematic is shown in the latest condition at the time of printing.

All resistance value in ohms. K = 1000.

All capacitance values less than 1 in MF and above 1 in MMF unless otherwise noted.

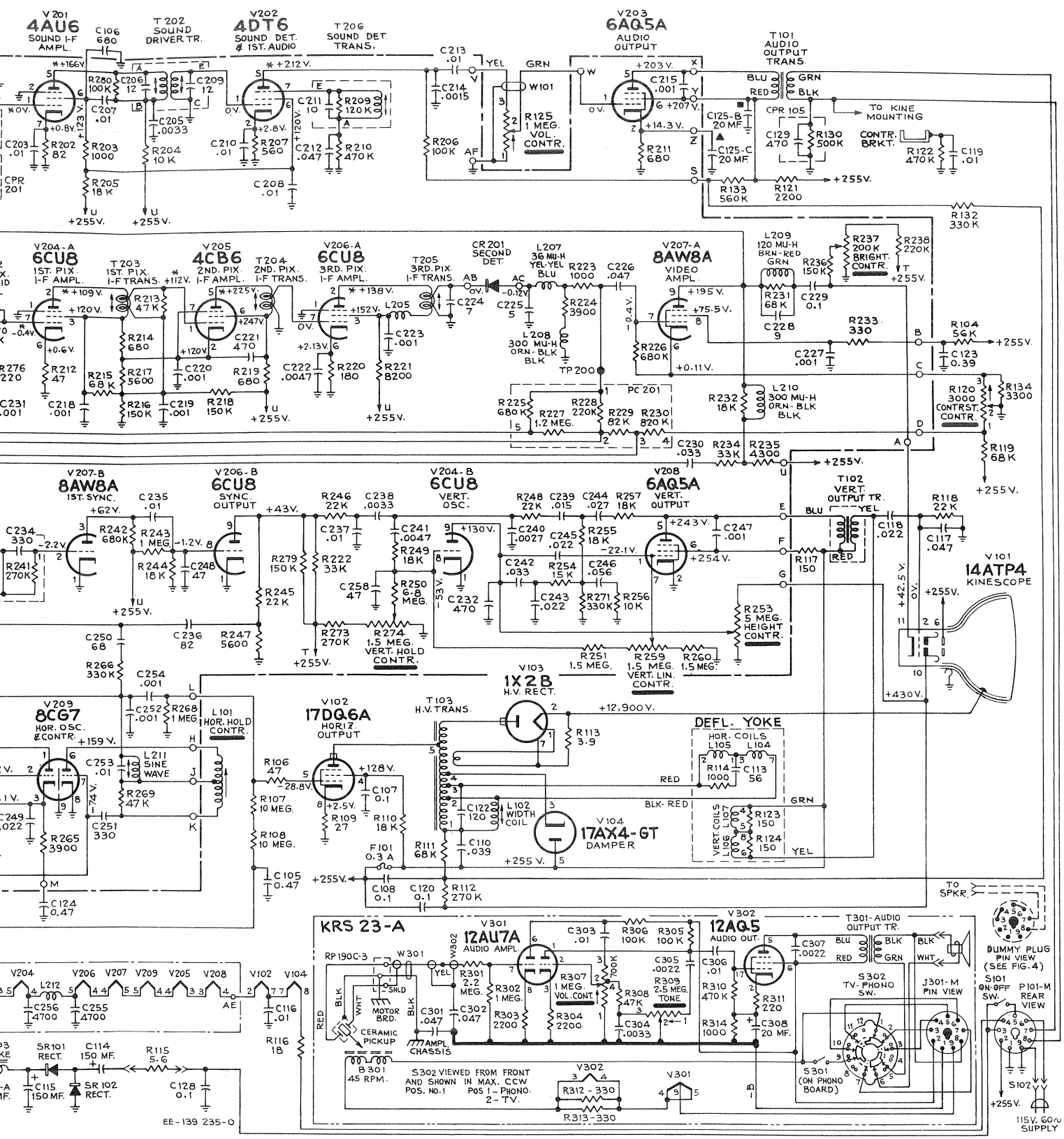

han 1 in otherwise

Direction of arrows at controls indicates clockwise rotation.

All voltages measured with "Volt-Ohmyst" and no signal input. Voltages should hold within ±20% with 117 v. a-c supply.

Figure 7—Circuit Schematic Diagram KCS111H Chassis

SYMBOL NO.	STOCK NO.	DESCRIPTION
		KRK46N VHF TUNER ASSEMBLY (Used in KCS111F Chassis)
C1	102646	Capacitor—Fixed, ceramic, 18 mmf., ±5%, 500 v. Part of 103525
C2	102571	Capacitor—Fixed, ceramic, 5 mmf., ±5%, 500 v. Part of 103525
C3	100352	Capacitor—Fixed, ceramic, 27 mmf., ±5%, 500 v. Part of 103525
C4	102573	Capacitor—Fixed, ceramic, 33 mmf., ±10%, 500 v. Part of 103525
C5	100672	Capacitor—Fixed, ceramic, 220 mmf., ±20%, 500 v. Part of S1D
C6	100672	Capacitor—Fixed, ceramic, 220 mmf., ±10%, 500 v.
C7	103554	Capacitor—Variable, 0.3-2.0 mmf.
C8	100672	Same as C6
C9	77690	Capacitor—Fixed, headed-lead, 1 mmf., ±10%, 500 v. Part of S1D
C10	103560	Capacitor—Fixed, mica, 82 mmf., ±5%, 500 v. Part of S1C
C11	77838	Capacitor—Fixed, ceramic, 270 mmf., ±20%, 500 v. Part of S1B
C12	103519	Capacitor—Variable band with 140-200 mmf., ±2%, 500 v.
C13	78622	Capacitor—Fixed, ceramic, 470 mmf., ±10%, 500 v.
C14	103552	Capacitor—Variable, mica, 0.3-3.0 mmf.
C15	103523	Capacitor—Fixed, ceramic, 7 mmf., ±10%, 500 v.
C16	103518	Capacitor—Feed thru, 100 mmf., 500 v.
C17	77690	Capacitor—Fixed, headed-lead, 1.0 mmf., ±10%, 500 v.
C18	——	Capacitor—Fine tuning capacitor. Part of S1A
C19	103556	Capacitor—Fixed, ceramic, 10 mmf., ±10%, 500 v. Part of S1A
C20 to C23 Incl.	105660	Capacitor—Fixed, feed thru, 1000 mmf., +100%, —0%, 1500 v.
C24	103559	Capacitor—Fixed, ceramic, 47 mmf., ±10%, 500 v. Part of S1A
C31	103553	Capacitor—Variable, mica, 0.3-3.0 mmf.
C32	71504	Capacitor—Fixed, headed-lead, 0.68 mmf., ±20%, 500 v. Part of S1C
C34	105660	Same as C20
J1	78237	Connector—I.F. output single contact—female
L1 to L4 Incl.	——	Coil—Part of 103525
L5	——	Coil—Part of 103525
L6	76562	Coil—R.F. plate coil
L7	——	Coil—Part of S1C
L8	——	Coil—Part of S1B
L9	——	Coil—Part of S1A
L10 to L19 Incl.	——	Coil—Part of S1D
L20 to L30 Incl.	——	Coil—Part of S1C
L31 to L41 Incl.	——	Coil—Part of S1B
L42 to L52 Incl.	——	Coil—Part of S1A
L53	——	Coil—Heater choke
L54	103524	Reactor—Plate choke coil, 1.5 microhenries
R1	502310	Resistor—Fixed, composition, 10,000 ohms, ±20%, ½ w.
R2	502047	Resistor—Fixed, composition, 47 ohms, ±10%, ½ w.
R3	502410	Resistor—Fixed, composition, 100,000 ohms, ±20%, ½ w.
R4, R5	502510	Resistor—Fixed, composition, 1 megohm, ±10%, ½ w.
R6	502210	Resistor—Fixed, composition, 1000 ohms, ±10%, ½ w. Part of S1C
R7	502327	Resistor—Fixed, composition, 27,000 ohms, ±5%, ½ w.
R8	502210	Resistor—Fixed, composition, 1000 ohms, ±20%, ½ w.
R9, R10	502410	Resistor—Fixed, composition, 100,000 ohms, ±20%, ½ w. Part of S1B
R11	502239	Resistor—Fixed, composition, 3900 ohms, ±10%, ½ w. Part of S1B
R12	502110	Resistor—Fixed, composition, 100 ohms, ±20%, ½ w.
R13	502256	Resistor—Fixed, composition, 5600 ohms, ±10%, ½ w.
R14	502268	Resistor—Fixed, composition, 6800 ohms, ±20%, ½ w.
R18	502147	Resistor—Fixed, composition, 470 ohms, ±20%, ½ w. Part of S1C
S1A	103561	Stator—Oscillator coil and stator assembly. Includes: C19, C24, L9, L42 to L52 Incl.
S1B	103563	Stator—Mixer coil and stator assembly. Includes: C11, L8, L31 to L41 Incl., R9, R10, R11
S1C	103562	Stator—R.F. coil and stator assembly. Includes: C10, C32, L7, L20 to L30 Incl., R6, R18
S1D	103564	Stator—Antenna coil and stator assembly. Includes: C5, C9, L10 to L19 Incl.
T1	73591	Coil—Antenna matching coil (2 req'd)
T2	104444	Transformer—Mixer plate transformer
	103513	Cam—Fine tuning cam and shaft assembly
	105694	Detent—Detent plate and shaft assembly
	103555	Holder—Nylon for adjusting screw for coils L19, L20, L41
	105693	Shaft—Fine tuning shaft
	104442	Socket—Tube socket, 9 pin miniature for V1
	105756	Socket—Tube socket, 9 pin miniature for V2
	105435	Spring—Retaining spring for oscillator tube
	100023	Spring—Stator shield grounding spring
	103515	Strap—Coil and stator mounting strap—steel
	104432	Terminal—Test point terminal
	103525	Transformer—Antenna matching transformer assembly. Includes: C1 to C4 Incl., L1 to L5 Incl.
	105691	Tuner—R.F. tuning complete — VHF — KRK46N
	76221	Washer—"C" washer front shield retaining
		KRK47N VHF TUNER ASSEMBLY (Used with KRK64F UHF Tuner Assembly in KCS111H Chassis)
C1	102646	Capacitor—Fixed, ceramic, 18 mmf., ±5%, 500 v. Part of 103525—Transformer
C2	102571	Capacitor—Fixed, ceramic, 5 mmf., ±5%, 500 v. Part of 103525—Transformer
C3	100352	Capacitor—Fixed, ceramic, 27 mmf., ±5%, 500 v. Part of 103525—Transformer
C4	102573	Capacitor—Fixed, ceramic, 33 mmf., ±10%, 500 v. Part of 103525 — Transformer
C5	100672	Capacitor—Fixed, ceramic, 220 mmf., ±20%, 500 v. Part of S1D
C6	100672	Capacitor—Fixed, ceramic, 220 mmf., ±10%, 500 v.
C7	103554	Capacitor—Variable trimmer, 0.3-2.0 mmf.
C8	100672	Same as C6
C9	77690	Capacitor—Fixed, headed-lead, 1 mmf., ±10%, 500 v. Part of S1D
C10	103560	Capacitor—Fixed, mica, 82 mmf., ±5%, 500 v. Part of S1C
C11	77838	Capacitor—Fixed, ceramic, 270 mmf., ±20%, 500 v. Part of S1B
C12	103519	Capacitor—Variable, mica, 140-200 mmf.
C13	78622	Capacitor—Fixed, ceramic, 470 mmf., ±10%, 500 v.
C14	103552	Capacitor—Variable, trimmer, 0.3 to 3.0 mmf.
C15	103523	Capacitor—Fixed, ceramic, 7 mmf., ±10%, 500 v.
C16	103518	Capacitor—Feed thru, 100 mmf., 500 v.
C17	77689	Capacitor — Fixed, headed-lead, 0.82 mmf., ±10%, 500 v. Part of S1A
C18	——	Capacitor—Fine tuning capacitor. Part of S1A
C19	103556	Capacitor—Fixed, ceramic, 10 mmf., ±.5 mmf., 500 v. Part of S1A
C20 to C23 Incl.	105660	Capacitor—Fixed, feed-thru, 1000 mmf., +100%, —0%, 1500 v.
C24	103559	Capacitor—Fixed, ceramic, 47 mmf., ±10%, 500 v. Part of S1A
C26, C27	105660	Same as C20
C28	77690	Capacitor—Fixed, headed-lead, 1.0 mmf., ±10%, 500 v. Part of S1A
C29	77252	Capacitor—Fixed, ceramic, 1000 mmf., +100%, —0%, 500 v.

SYMBO NO.
C30
C31
C32
C33
C34
J1, J2
L1 to L5 Incl.
L6
L7
L8
L9
L10 to L19 Incl.
L20 to L30 Incl.
L31 to L41 Incl.
L42 to L52 Incl.
L53
L54, L55
L56
R1
R2
R3
R4, R5
R6
R7
R9, R10
R11
R12
R15
R16
R17
R18
R19
R21
R22
S1A
S1B
S1C
S1D
T1
T2
T3

REPLACEMENT PARTS (Continued)

SYMBOL NO.	STOCK NO.	DESCRIPTION
C30	105660	Same as C20
C31	103553	Capacitor—Variable, trimmer 0.3-3.0 mmf.
C32	71504	Capacitor—Fixed, headed-lead, 0.68 mmf., ±20%, 500 v. Part of S1C
C33	103534	Capacitor—Fixed, ceramic, 22 mmf. Part of S1B
C34	105660	Same as C20
J1, J2	78237	Connector—I.F. output and U.H.F. input
L1 to L5 Incl.		Coil—Part of 103525
L6	76562	Coil—R.F. plate coil
L7	——	Coil—Part of S1C
L8	——	Coil—Part of S1B
L9	103531	Coil—I.F. interstage. Part of S1A
L10 to L19 Incl.	——	Coil—Part of S1D
L20 to L30 Incl.	——	Coil—Part of S1C
L31 to L41 Incl.	——	Coil—Part of S1B
L42 to L52 Incl.	——	Coil—Part of S1A
L53	——	Coil—Part of S1B
L54, L55	——	Coil—Filament choke coil
L56	——	Coil
R1	502310	Resistor—Fixed, composition, 10,000 ohms, ±20%, ½ w.
R2	502047	Resistor—Fixed, composition, 47 ohms, ±10%, ½ w.
R3	502410	Resistor—Fixed, composition, 100,000 ohms, ±20%, ½ w.
R4, R5	502510	Resistor—Fixed, composition, 1 megohm, ±10%, ½ w.
R6	502210	Resistor—Fixed, composition, 1000 ohms, ±10%, ½ w. Part of S1C
R7	502327	Resistor—Fixed, composition, 27,000 ohms, ±5%, ½ w.
R9, R10	502410	Resistor—Fixed, composition, 100,000 ohms, ±20%, ½ w. Part of S1B
R11	502239	Resistor—Fixed, composition, 3900 ohms, ±10%, ½ w. Part of S1B
R12	502110	Resistor—Fixed, composition, 100 ohms, ±20%, ½ w.
R15	502210	Resistor—Fixed, compisition, 1000 ohms, ±20%, ½ w. Part of S1B
R16	502110	Same as R12
R17	502015	Resistor—Fixed, composition, 15 ohms, ±10%, ½ w.
R18	502147	Resistor—Fixed, composition, 470 ohms, ±20%, ½ w. Part of S1C
R19	502382	Resistor—Fixed, composition, 82,000 ohms, ±10%, ½ w.
R21	502110	Resistor—Fixed, composition, 100 ohms, ±10%, ½ w.
R22	502410	Resistor—Fixed, composition, 100,000 ohms, ±10%, ½ w.
S1A	103549	Stator—Oscillator coil and stator assembly. Includes: C17, C19, C24, L9, L42 to L52 Incl.
S1B	103551	Stator—Mixer coil and stator assembly. Includes: C11, L8, L31 to L41 Incl., L53
S1C	103550	Stator—R.F. coil and stator assembly. Includes: C10, C32, L7, L20 to L30 Incl., R6, R18
S1D	103564	Stator—Antenna coil and stator assembly. Includes C5, C9, L10 to L19 Incl.
T1	73591	Transformer—Antenna matching coil only (2 req'd). Part of 103525
T2	104444	Transformer—Mixer plate
T3	103668	Transformer—UHF I.F. transformer
	103513	Cam—Fine tuning cam and shaft assembly
	105695	Detent—Detent plate and shaft assembly
	103533	Form—Coil form assembly for L8. Part of S1B
	103557	Form—Coil form assembly for L53. Part of S1B
	103532	Form—Coil form and core assembly for L56
	103555	Holder—Nylon to support adjusting screw for L19, L20, L53
	105693	Shaft—Fine tuning shaft
	104442	Socket—Tube socket, 9 pin miniature for V1
	105756	Socket—Tube socket, 9 pin miniature for V2
	105435	Spring—Retaining spring for oscillator tube

SYMBOL NO.	STOCK NO.	DESCRIPTION
	100023	Spring—Stator shield grounding spring
	103515	Strap—Coil and stator mounting strap—steel
	103525	Transformer — Antenna matching transformer. Includes: C1 to C4 Incl., L1 to L5 Incl.
	105692	Tuner—R.F. tuning unit assembly—VHF—KRK47N
	76221	Washer—"C" type retaining washer for front shield
	103522	Washer—Spring washer friction type for front shield
		KRK64 UHF TUNER ASSEMBLY
C1	——	Capacitor—Antenna trimmer
C2	——	Capacitor—Antenna section of tuning capacitor
C3	——	Capacitor—Mixer trimmer
C4	——	Capacitor—Mixer section of tuning capacitor
C5	104915	Capacitor—Fixed, ceramic, 22 mmf., ±5%, 500 v.
C6	103997	Capacitor—Feed thru, 1000 mmf., 500 v.
C7	102978	Capacitor—Fixed, ceramic, 1.5 mmf., ±0.25 mmf., 500 v. Temp. Coeff. N750
C8A, C8B	——	Capacitor—Variable, oscillator section of tuning capacitor
C9	——	Capacitor—Variable, high frequency oscillator trimmer
C10	——	Capacitor—Variable, low end trimmer
C11	103997	Same as C6
C12	104916	Capacitor—Fixed, ceramic, 1.0 mmf., ±.1 mmf., 500 v.
C13	104917	Capacitor—Fixed, ceramic, 0.5 mmf., ±.1 mmf., 500 v.
C14	103997	Same as C6
CR1	104001	Rectifier—Crystal diode type 1N82
L1	——	Reactor—Antenna coupling loop
L2	——	Reactor—Antenna tank coil
L3	——	Reactor—Mixer tank
L4	——	Reactor—Mixer R.F. coupling
L5	——	Coil—I.F. coil
L6	——	Reactor—Mixer—osc. coupling
L7, L8	——	Reactor—Filament choke
L9	——	Reactor—Cathode choke
L10, L11	——	Reactor—Oscillator tank
R1	502282	Resistor—Fixed, compcsition, 8200 ohms, ±10%, ½ w.
R2	512268	Resistor—Fixed, composition, 6800 ohms, ±10%, 1 w.
	103049	Bearing—Front ball race and bearing assembly
	103733	Gear—Dial gear assembly insulated
	101206A	Gear—Dial gear assembly not insulated
	101205	Gear—R.F. rotor gear assembly with spring
	101204	Gear—Spur 48 teeth steel
	101209A	Gear—UHF drive gear assembly, zinc die cast
	104919	Jack—Output jack female two contact
	14343	Retainer—"C" type retainer
	70527	Screw—Allen Hd. set screw 0.188" lg.
	101208	Shaft—Cold, UHF drive shaft steel
	101207	Shaft—Insulated, UHF drive shaft fibre
	104918	Shield—Tube shield for V1
	104012	Socket—Tube socket for V1
	104656	Stop—UHF gang stop with one wing small
	101201	Stop—UHF gang stop with two wings
	101202	Stop—UHF gang stop with three wings
	104594	Tuner—R.F. tuning unit assembly KRK64F
	33726	Washer—"C" type retaining washer
	100674	Washer—Spring washer ½" O.D. x 0.260" I.D. x 0.005" thk.
		CHASSIS ASSEMBLIES KCS111F & KCS111H
C101		Part of CPR101
C102		Part of CPR102
C103	104392	Capacitor—Mica, trimmer, 15-145 mmf., 350 v.
C104	105479	Capacitor—Fixed, ceramic, .039 mf., +100 —0%, 500 v.

SYMBOL NO.
C105
C106
C107, C108
C110
C113
C114
C115
C116
C117
C118
C119
C120
C121
C122
C123
C124
C125A to C125C Incl
C126
C127
C128
C129
CPR101 to CPR104 Inc
CPR105
F101
L101
L102
L103
L104 to L107 Incl.
R101
R102
R103
R104
R106
R107, R108
R109
R110
R111
R112
R113
R114
R115
R116
R117
R118
R119
R120
R121
R122
R123, R124
R125
R126

SYMBOL NO.	STOCK NO.	DESCRIPTION
C105	104393	Capacitor—Fixed, paper, .047 mf., ±20%, 200 v.
C106	104135	Capacitor—Fixed, ceramic, 680 mmf., ±20% 500 v.
C107, C108	104311	Capacitor—Fixed, paper, 0.1 mf., ±20%, 600 v.
C110	73799	Capacitor—Fixed, paper, .039 mf., ±10%, 600 v.
C113		Part of Yoke
C114	100293	Capacitor—Fixed, electrolytic, 150 mf., —10 +100%, 200 v. DC
C115	104325	Capacitor—Fixed, electrolytic, 150 mf., 350 v. DC
C116	73960	Capacitor—Fixed, ceramic, .01 mf., +100 —0%, 500 v.
C117	104133	Capacitor—Fixed, paper, .047 mf., ±20%, 200 v.
C118	103351A	Capacitor—Fixed, paper, .022 mf., ±20%, 400 v.
C119	100910	Capacitor—Fixed, ceramic, .01 mf., +100 —0%, 1000 v.
C120	104311	Same as C107
C121	104393	Same as C105
C122	79532	Capacitor—Fixed, ceramic, 120 mmf., ±10%, 3500 v.
C123	103034A	Capacitor—Fixed, paper, 0.39 mf., ±10%, 400 v.
C124	104393	Same as C105
C125A to C125C Incl.	104194	Capacitor—Fixed, electrolytic, 100/20/20 mf., 350/350/50 v. DC
C126		Part of CPR104
C127		Part of CPR103
C128	73592	Capacitor—Fixed, paper, .047 mf., ±20%, 600 v.
C129		Part of CPR105
CPR101 to CPR104 Incl.	104328	Circuit—Resistor and capacitor circuit, 500,000 ohms and 270 mmf. Part of back. CPR101 Includes: C101, R101. CPR102 Includes: C102, R102. CPR103 Includes: C127, R127. CPR104 Includes; C126, R128
CPR105	104328	Circuit—Resistor and capacitor circuit. Includes: R130, C129
F101	102164	Fuse—0.3 amp.
L101	103570	Coil—Horizontal frequency
L102	103104	Coil—Width
L103	102638	Reactor—Filter choke
L104 to L107 Incl.		Part of Yoke
R101		Part of CPR101
R102		Part of CPR102
R103	502127	Resistor—Fixed, composition, 270 ohms, ±10%, ½ w.
R104	512356	Resistor—Fixed, composition, 56,000 ohms, ±10%, 1 w.
R106	502047	Resistor—Fixed, composition, 47 ohms, ±20%, ½ w.
R107, R108	502610	Resistor—Fixed, composition, 10 megohms, ±10%, ½ w.
R109	104389	Resistor—Fixed, wire wound, 27 ohms, ±10%, 1 w.
R110	522318	Resistor—Fixed, composition, 18,000 ohms, ±10%, 2 w.
R111	502368	Resistor—Fixed, composition, 68,000 ohms, ±20%, ½ w.
R112	502427	Resistor—Fixed, composition, 270,000 ohms, ±10%, ½ w.
R113	103030	Resistor—Fixed, wire wound, 3.9 ohms, ±10%, ½ w.
R114		Part of Yoke
R115	100117	Resistor—Fuse type, 5.6 ohms, 5 w.
R116	104390	Resistor—Fixed, wire wound, 18 ohms, ±10%, 7 w.
R117	512115	Resistor—Fixed, composition, 150 ohms, ±10%, 1 w.
R118	502322	Resistor—Fixed, composition, 22,000 ohms, ±20%, ½ w.
R119	522368	Resistor—Fixed, composition, 68,000 ohms, ±10%, 2 w.
R120	104484	Control—Contrast control
R121	522222	Resistor—Fixed, composition, 2200 ohms, ±20%, 2 w.
R122	502447	Resistor—Fixed, composition, 470,000 ohms, ±20%, ½ w.
R123, R124		Part of Yoke
R125	104195	Control—On-Off volume. Includes S101
R126	522312	Resistor—Fixed, composition, 12,000 ohms, ±10%, 2 w. For KCS111H
R127		Part of CPR103
R128		Part of CPR104
R129	502510	Resistor—Fixed, composition, 1 megohm, ±10%, ½ w.
R130		Part of CPR105
R132	502433	Resistor—Fixed, composition, 330,000 ohms, ±10%, ½ w.
R133	502456	Resistor—Fixed, composition, 560,000 ohms, ±10%, ½ w.
R134	502233	Resistor—Fixed, composition, 3300 ohms, ±10%, ½ w.
S101		Part of R125
S102	100029	Connector—2 contact male
SR101, SR102	100035	Rectifier—Selenium
T101	104193	Transformer—Audio output
T102	104192	Transformer—Vertical output
T103	103092	Transformer—High voltage
	104191	Cover—High voltage compartment cover
	105706	Grommet—Chassis mounting
	104197	Grommet—Chassis mounting (4 req'd)
	104198	Holder—Fuse resistor holder
	102162	Holder—Fuse holder
	79533	Knob—Horizontal frequency coil knob
	100306	Lead—Anode connector and lead assembly
	105705	Lead—UHF link lead assembly
	104190	Shield—High voltage compartment shield
	103112	Shield—Tube, high voltage for V103
	77645	Socket—Tube, octal for V102
	68590	Socket—Tube, octal for V104
	103113	Socket—Tube, 9 pin for V103
	100297	Washer—Horizontal frequency coil knob washer
		PW200—Printed Wiring Assembly
C201		Part of T201
C202		Part of CPR201
C203	73960	Capacitor—Fixed, ceramic, .01 mf., +100 —0%, 500 v.
C204	104204	Capacitor—Fixed, ceramic, 3 mmf., ±1 mmf., 1000 v.
C205	104205	Capacitor—Fixed, ceramic, .0033 mf., ±10%, 500 v.
C206		Part of T202
C207, C208	73960	Same as C203
C209		Part of T202
C210	73960	Same as C203
C211		Part of T206
C212	104206	Capacitor—Fixed, paper, .047 mf., ±20%, 200 v.
C213	73960	Same as C203
C214	104207	Capacitor—Fixed, ceramic, .0015 mf., ±20%, 500 v.
C215	105778	Capacitor—Fixed, ceramic, .001 mf., ±10%, 1000 v.
C216	77293	Capacitor—Fixed, ceramic, 470 mmf., +100 —0%, 500 v.
C217	103133	Capacitor—Fixed, ceramic, 18 mmf., ±5%, 500 v.
C218	102234A	Capacitor—Fixed, ceramic, .001 mf., ±20%, 500 v.
C219, C220	77252	Capacitor—Fixed, ceramic, .001 mf., +100 —0%, 500 v.
C221	78622	Capacitor—Fixed, ceramic, 470 mmf., ±20%, 500 v.
C222	73473	Capacitor—Fixed, ceramic, .0047 mf., +100 —0%, 500 v.
C223	102234A	Same as C218
C224	104177	Capacitor—Fixed, ceramic, 7 mmf., ±0.5 mmf., 500 v.
C225	104178	Capacitor—Fixed, ceramic, 5 mmf., ±0.5 mmf., 500 v.
C226	104210	Capacitor—Fixed, paper, .047 mf., ±20%, 200 v.
C227	77252	Same as C219
C228	104211	Capacitor—Fixed, ceramic, 9 mmf., ±0.5 mmf., 500 v.
C229	104212	Capacitor—Fixed, paper, 0.1 mf., ±20%, 400 v.
C230	104213	Capacitor—Fixed, paper, .033 mf., ±20%, 600 v.
C231	77252	Same as C219
C232	77293	Same as C216
C233, C234		Part of PC202

REPLACEMENT PARTS (Continued)

SYMBOL NO.	STOCK NO.	DESCRIPTION
C235	73960	Same as C203
C236	104214	Capacitor—Fixed, ceramic, 82 mmf., ±5%, 500 v.
C237	102220A	Capacitor—Fixed, paper, .01 mf., ±10%, 400 v.
C238	104205	Same as C205
C239	104216	Capacitor—Fixed, paper, .015 mf., ±10%, 200 v.
C240	104131	Capacitor—Fixed, ceramic, .0027 mf., ±10% 500 v.
C241	73920	Capacitor—Fixed, paper, .0047 mf., ±10%, 600 v.
C242	104218	Capacitor—Fixed, paper, .033 mf., ±10%, 600 v.
C243	104219	Capacitor—Fixed, paper, .022 mf., ±20%, 400 v.
C244	104220	Capacitor—Fixed, paper, .027 mf., ±10%, 600 v.
C245	104145	Capacitor—Fixed, paper, .022 mf., ±20%, 600 v.
C246	104221	Capacitor—Fixed, paper, .056 mf., ±10%, 200 v.
C247	104222	Capacitor—Fixed, ceramic, .001 mf., ±10%, 2000 v.
C248	102882	Capacitor—Fixed, ceramic, 47 mmf., ±10%, 500 v.
C249	104223	Capacitor—Fixed, paper, .022 mf., ±20%, 400 v.
C250	104224	Capacitor—Fixed, ceramic, 68 mmf., ±5%, 500 v.
C251	104225	Capacitor—Fixed, mica, 330 mmf., ±5%, 1000 v.
C252	104226	Capacitor—Fixed, mica, .001 mf., ±5%, 500 v.
C253	104227	Capacitor—Fixed, paper, .01 mf., ±5%, 600 v.
C254	104226	Capacitor—Fixed, mica, .001 mf., ±10%, 500 v.
C255, C256	73473	Same as C222
C258	102882	Same as C248
C259	77293	Same as C216
CPR201	104329	Circuit—Capacitor and resistor circuit. Includes: C202, R201
CR201	105517	Rectifier—Crystal
L202	104232	Transformer—1st pix I.F. grid
L203	104141	Coil—47.25 M.C. trap
L207	101819	Coil—2nd I.F. pix grid
L208	104230	Coil—Peaking
L209	105456	Coil—Peaking
L210	104230	Same as L208
L211	102195	Coil—Horizontal oscillator filter
L212	73477	Reactor—Filter
PC201	104331	Circuit—Printed resistor circuit. Includes: R225, R227, R228, R229, R230
PC202	104332	Circuit—Printed capacitor and resistor circuit. Includes: C233, C234, R239, R240, R241
PW200	105777	Circuit—Printed chassis circuit assembly, 3 I.F. less tubes
R201		Part of CPR201
R202	502082	Resistor—Fixed, composition, 82 ohms, ±10%, ½ w.
R203	502210	Resistor—Fixed, composition, 1000 ohms, ±20%, ½ w.
R204	512310	Resistor—Fixed, composition, 10,000 ohms, ±20%, 1 w.
R205	522318	Resistor—Fixed, composition, 18,000 ohms, ±10%, 2 w.
R206	502410	Resistor—Fixed, composition, 100,000 ohms, ±20%, ½ w.
R207	502156	Resistor—Fixed, composition, 560 ohms, ±10%, ½ w.
R209		Part of T206
R210	502447	Resistor—Fixed, composition, 470,000 ohms, ±20%, ½ w.
R211	512168	Resistor—Fixed, composition, 680 ohms, ±10%, 1 w.
R212	502047	Resistor—Fixed, composition, 47 ohms, ±10%, ½ w.
R213	502347	Resistor—Fixed, composition, 47,000 ohms, ±5%, ½ w.
R214	502168	Resistor—Fixed, composition, 680 ohms, ±10%, ½ w.
R215	502368	Resistor—Fixed, composition, 68,000 ohms, ±10%, ½ w.
R216	502415	Resistor—Fixed, composition, 150,000 ohms, ±5%, ½ w.
R217	502256	Resistor—Fixed, composition, 5600 ohms, ±10%, ½ w.
R218	502415	Same as R216
R219	502168	Same as R214
R220	502118	Resistor—Fixed, composition, 180 ohms, ±5%, ½ w.
R221	522282	Resistor—Fixed, composition, 8200 ohms, ±10%, 2 w.
R222	522333	Resistor—Fixed, composition, 33,000 ohms, ±10%, 2 w.
R223	502210	Same as R203
R224	502239	Resistor—Fixed, composition, 3900 ohms, ±5%, ½ w.
R225		Part of PC201
R226	502468	Resistor—Fixed, composition, 680,000 ohms, ±20%, ½ w.
R227 to R230 Incl.		Part of PC201
R231	502368	Resistor—Fixed, composition, 68,000 ohms, ±20%, ½ w.
R232	502318	Resistor—Fixed, composition, 18,000 ohms, ±10%, ½ w.
R233	502133	Resistor—Fixed, composition, 330 ohms, ±20%, ½ w.
R234	502333	Resistor—Fixed, composition, 33,000 ohms, ±10%, ½ w.
R235	104201	Resistor—Fixed, wire wound, 4300 ohms, ±10%, 5 w.
R236	502415	Resistor—Fixed, composition, 150,000 ohms, ±10%, ½ w.
R237	104202	Control—Height and brightness
R238	502422	Resistor—Fixed, composition, 220,000 ohms, ±10%, ½ w.
R239 to R241 Incl.		Part of PC202
R242	502468	Resistor—Fixed, composition, 680,000 ohms, ±10%, ½ w.
R243	502510	Resistor—Fixed, composition, 1 megohm, ±10%, ½ w.
R244		Same as R232
R245	512322	Resistor—Fixed, composition, 22,000 ohms, ±10%, 1 w.
R246	502322	Resistor—Fixed, composition, 22,000 ohms, ±10%, ½ w.
R247	502256	Resistor—Fixed, composition, 5600 ohms, ±10%, ½ w.
R248	502322	Same as R246
R249	502318	Same as R232
R250	502568	Resistor—Fixed, composition, 6.8 megohms, ±10%, ½ w.
R251	502515	Resistor—Fixed, composition, 1.5 megohms, ±10%, ½ w.
R253	104202	Same as R237
R254	502315	Resistor—Fixed, composition, 15,000 ohms, ±10%, ½ w.
R255	502318	Resistor—Fixed, composition, 18,000 ohms, ±5%, ½ w.
R256	502310	Resistor—Fixed, composition, 10,000 ohms, ±10%, ½ w.
R257	512318	Resistor—Fixed, composition, 18,000 ohms, ±5%, 1 w.
R259	104203	Control—Vertical linearity and vertical hold
R260	502515	Same as R251

SYMBOL NO.	STOCK NO.	DESCRIPTION
R261	502512	Resistor—Fixed, composition, 1.2 megohms, ±10%, ½ w.
R262	502415	Resistor—Fixed, composition, 150,000 ohms, ±5%, ½ w.
R263	502382	Resistor—Fixed, composition, 82,000 ohms, ±5%, ½ w.
R264	512410	Resistor—Fixed, composition, 100,000 ohms, ±5%, 1 w.
R265	502239	Resistor—Fixed, composition, 3900 ohms, ±10%, ½ w.
R266	502433	Resistor—Fixed, composition, 330,000 ohms, ±10%, ½ w.
R267	512356	Resistor—Fixed, composition, 56,000 ohms, ±10%, 1 w.
R268		Same as R243
R269	502347	Resistor—Fixed, composition, 47,000 ohms, ±10%, ½ w.
R270	502315	Resistor—Fixed, composition, 15,000 ohms, ±5%, ½ w.
R271	502433	Same as R266
R272	502210	Same as R203
R273	502427	Resistor—Fixed, composition, 270,000 ohms, ±10%, ½ w.
R274	104203	Same as R259
R276	502122	Resistor—Fixed, composition, 220 ohms, ±10%, ½ w.
R279	502415	Resistor—Fixed, composition, 150,000 ohms, ±10%, ½ w.
T201	104136	Transformer — Sound take-off. Includes C201
T202	104137	Transformer—Sound driver. Includes C206, C209
T203 to T205 Incl.	104233	Transformer—1st, 2nd, 3rd pix
T206	105795	Transformer — Sound detector. Includes C211, R209
	104200	Can—2nd detector can
	104199	Shield—Coil shield for L202, L203
	105780	Shield—Tube, 7 pin for V202
	104570	Socket—Tube, 7 pin for V201, V205
	104571	Socket—Tube, 7 pin for V203
	104572	Socket—Tube, 7 pin for V208
	104568	Socket—Tube, 9 pin for V204, V206, V207
	104569	Socket—Tube, 9 pin for V209
		KRS23A PHONO AMPLIFIER ASSEMBLY
C301, 302	73592	Capacitor—Fixed, paper, .047 mf., ±20%, 600 v.
C303	73561	Capacitor—Fixed, paper, .01 mf., ±10%, 400 v.
C304	79315	Capacitor—Fixed, paper, .0033 mf., ±10%, 400 v.
C305	73595	Capacitor—Fixed, paper, .0022 mf., ±10%, 600 v.
C306	73561	Capacitor—Fixed, paper, .01 mf., ±20%, 400 v.
C307	73803	Capacitor—Fixed, paper, .0022 mf., ±10%, 1000 v.
C308	18368	Capacitor—Fixed, electrolytic, 20 mf., —10 +50%, 150 v.
J301	105711	Connector—9 contact amplifier—male
R301	502522	Resistor—Fixed, composition, 2.2 megohms, ±10%, ½ w.
R302	502510	Resistor—Fixed, composition, 1 megohm, ±10%, ½ w.
R303, R304	502222	Resistor—Fixed, composition, 2200 ohms, ±10%, ½ w.
R305, R306	512410	Resistor—Fixed, composition, 100,000 ohms, ±10%, 1 w.
R307	105708	Control—Volume
R308	502347	Resistor—Fixed, composition, 47,000 ohms, ±10%, ½ w.
R309	105709	Control—Tone

SYMBOL NO.	STOCK NO.	DESCRIPTION
R310	502447	Resistor—Fixed, composition, 470,000 ohms, ±20%, ½ w.
R311	522122	Resistor—Fixed, composition, 220 ohms, ±10%, 2 w.
R312, R313	512133	Resistor—Fixed, composition, 330 ohms, ±10%, 1 w.
R314	105712	Resistor—Fixed, composition, 1000 ohms, ±10%, 4 w.
S302	105710	Switch—T.V. phono function switch
T301	105714	Transformer—Audio output
	101261	Nut—Spring type for volume, tone and function switch mounting
	101375	Socket—Tube, 7 pin miniature for V302
	100474	Socket—Tube, 9 pin miniature for V301
		YOKE AND MAGNET ASSY.
C113	104617	Capacitor—Fixed, ceramic, 56 mmf., ±10%, 2500 v.
R114	502210	Resistor—Fixed, composition, 1000 ohms, ±10%, ½ w.
R123, R124	502115	Resistor—Fixed, composition, 150 ohms, ±10%, ½ w.
	102396	Clamp — Centering magnet mounting clamp
	104368	Magnet—Centering
	104369	Yoke — Deflection yoke assembly. Includes: C113, L104 to L107 Incl., R114, R123, R124
		SPEAKER ASSEMBLY 972132-1
	105713	Speaker—6½" P.M. speaker assembly
		MISCELLANEOUS
	105703	Back—Cabinet back assembly complete with power cable and plug
	105698	Board—VHF antenna terminal board
	104459	Board—VHF/UHF antenna terminal board
	M4307	Cabinet—Masonite cabinet and lid assembly — mahogany grain — for Models 14VT8155 & U
	M4300	Cabinet—Masonite cabinet and lid assembly — oak grain — for Models 14VT8157 & U
	103075	Cable—Power cable and plug
	X3786	Cloth—Cabinet grille cloth for Models 14VT8155 & U
	X3801	Cloth—Cabinet grille cloth for Models 14VT8157 & U
	105783	Connector—Power amplifier connector—female—9 contact
	105700	Cushion—Safety glass cushion, 13" long
	74273	Decalcomania—"Victrola" decal
	77492	Foot—Cabinet leg foot—rubber
	100270	Grommet — Power cable strain relief grommet and key
	75697	Grommet — Record changer mounting grommet
	105782	Hinge—Cabinet lid hinge (2 req'd)
	103078	Knob—Contrast and volume control knob — black — for mahogany grain Models 14VT8155 & U
	103077	Knob—Contrast and volume control knob — gravel tan — for oak grain Models 14VT8157 & U
	104349	Knob—Fine tuning — black — for mahogany grain Models 14VT8155 & U
	104351	Knob—Fine tuning — gravel tan — for oak grain Models 14VT8157 & U
	105699	Knob—T.V. — phono or tone control knob — taupe
	103069	Knob—UHF channel selector — black — for mahogany grain Models 14VT8155U
	103068	Knob—UHF channel selector — gravel tan — for oak grain Models 14VT8157U

REPLACEMENT PARTS (Continued)

SYMBOL NO.	STOCK NO.	DESCRIPTION
	104525	Knob—UHF dial escutcheon — black — for mahogany grain Models 14VT8155U
	104527	Knob—UHF dial escutcheon — gravel tan — for oak grain Models 14VT8157U
	104343	Knob—VHF channel selector — black — for mahogany grain Models 14VT8155
	104345	Knob—VHF channel selector — gravel tan — for oak grain Models 14VT8157
	104346	Knob—VHF channel selector — black — with "UHF" marking for mahogany grain Models 14VT8155U
	104348	Knob—VHF channel selector — gravel tan — with "UHF" marking for oak grain Models 14VT8157U
	100652B	Knob—Volume control knob—taupe
	105707	Lead—R.F. link cable
	Z3928	Leg—Cabinet metal leg brass finish (2 req'd)
	105697	Mask—Kinescope mask and bracket assy.
	76588	Nameplate—"RCA Victor"
	104377	Nut—Speed nut "U" type for body base mounting
	105701	Retainer—Safety glass top retainer

SYMBOL NO.	STOCK NO.	DESCRIPTION
	104367A	Shaft—Brightness and vertical hold extension shaft
	75708	Shell—Power amplifier connector insulating shell
	105702	Shield—VHF and UHF channel selector knob holes — metal
	104394	Socket—Kine socket and lead assembly
	102582	Spring—Knob retaining for knobs: 103068, 103069
	74734	Spring—Knob retaining for knobs: 103077, 103078
	76837	Spring—Knob retaining for knobs: 104343, 104345, 104346, 104348
	72845	Spring—Knob retaining for knobs: 104349, 104351
	103738	Spring—Knob retaining for knobs: 104525, 104527
	104464	Spring—VHF & UHF/VHF knob hole shield retaining spring
	105704	Strap—Kine mounting strap assembly — top
	104375	Strap—Kine mounting strap assembly — bottom
	105696	Window—Safety