PHOTOFACT* Folder

*TRADE MARK

RCA VICTOR MODELS 21-D-8525, U, 21-D-8526, U, 21-D-8527, U, 21-D-8528, U, 21-D-8545, U, 21-D-8546, U, 21-D-8547, U, 21-D-8565, U, 21-D-8566, U, 21-D-8567, U, 21-D-8588, U, 21-D-8605, U, 21-D-8607, U, 21-D-8608, U, 24-D-8655, U, 24-D-8657, U, 24-D-8676, U, 24-D8678, U (Ch. KCS-108, C, D, E, F)

DISASSEMBLY INSTRUCTIONS

CHASSIS REMOVAL

1. Remove 10 push-on type knobs from the side.

2. Remove 6 wood screws holding the rear cover. Remove the rear cover.

3. Remove the antenna plug, pilot lamp plug, picture tube socket, yoke plug, speaker plug, tuner power cable and tuner output cable.

4. In model with remote tuning remove the remote control unit, tuning motor plug, and cable for the on-off and channel selector switches. Remove the selector switch assembly and corner brace for the remote control unit.

5. Remove 2 metal screws holding the volume-contrast control bracket.

6. Remove 2 metal screws holding the control bracket to the control case.

7. Remove 2 hex nuts at the top of the chassis and 2 metal screws at the bottom.

8. Partially remove the chassis. Remove the HV lead and remove the chassis.

MODEL 21-D-8566U (CH. KCS108F)

TRADE NAME	RCA Victor	MODELS	CHASSIS
		21-D-8525, 21-D-8526, 21-D-8527, 21-D-8528, 21-D-8545, 21-D-8546, 21-D-8547, 21-D-8588, 21-D-8605, 21-D-8607, 21-D-8608, 24-D-8655, 24-D-8657	KCS108C
		21-D-8525U, 21-D-8526U, 21-D-8527U, 21-D-8528U, 21-D-8545U, 21-D-8546U, 21-D-8547U, 21-D-8588U, 21-D-8605U, 21-D-8607U, 21-D-8608U, 24-D-8655U, 24-D-8657U	KCS108D
		21-D-8565, 21-D-8566, 21-D-8567, 24-D-8676, 24-D-8678,	KCS108E
		21-D-8565U, 21-D-8566U, 21-D-8567U, 24-D-8676U, 24-D-8678U	KCS108F
		21-RD-8525	KCS108H

MANUFACTURER	Radio Corporation of America, RCA Victor Tele. Div., Camden 8, N.J.
TYPE SET	Television Receiver
TUBES	Twenty
POWER SUPPLY	110-120 Volts AC, 60 Cycle RATING 215 Watts, 1.9 Amp. @ 117 Volts AC
TUNING RANGE	Channels 2 thru 13 VHF, 14 thru 83 UHF, Video IF 45.75MC, Sound IF 41.25MC (Intercarrier)

SERVICING IN THE FIELD

TUNER OSCILLATOR ADJUSTMENTS

Touch-up adjustment of the VHF oscillator is possible by removing the channel selector and fine tuning knobs. Set the fine tuning at the center of its range. The adjustments (located in a circle around the shaft) should be made in sequence from the highest to the lowest channel in the area. Channel 12 adjustment is located at 12 o'clock, proceed in a counter clockwise direction adjusting for best picture and sound.

PICTURE TUBE SAFETY GLASS CLEANING

There are 2 methods of removing the safety glass. On models with "U" shaped trim strips along the top and bottom edges pry them off starting at the extreme edges; slide the glass retainer at the top and bottom to release the safety glass and remove the retainers and safety glass. On models with a metal trim all the way around pry the trim outward beginning in the center of the bottom and continuing around to remove the trim; straighten the tabs holding the safety glass and remove the glass.

SPECIAL ADJUSTMENTS

A. AGC And Sync Stab.
Tune in the strongest station in the area. Turn the sync stab. control fully clockwise. Adjust the AGC control clockwise until a bend appears in the picture, then counter clockwise 1/4 turn. Adjust the fine tuning until a beat pattern appears in the picture and advance the AGC control to the point where the picture bends, then counter clockwise 1/8 turn. Adjust the horizontal hold as far counter clockwise as possible and still retain sync. Adjust the sync stab. control until a bend appears in the picture, then counter clockwise from 15 to 30 degrees. Adjust horizontal hold to the center of its range.

B. Automatic Channel Selection
To set up the channels to be received by remote tuning slide the switches on the back of the receiver to uncover the number of the desired channels.

HORIZONTAL OSCILLATOR FIELD ADJUSTMENTS

Adjust horizontal hold control until picture synchronizes horizontally. If satisfactory results cannot be obtained by the above adjustment see Horizontal Sweep Circuit Adjustment.

SOUND IF DETECTOR BUZZ ADJUSTMENT

To eliminate sound IF detector buzz, adjust the ratio detector secondary (A9) located on bottom of chassis.

FUSES

One fuse is used for horizontal sweep circuit protection. (For location, see tube placement chart). Some versions may use 3 fuses in the filament supply.

CENTERING

Centering is accomplished mechanically by adjusting two magnetic rings around the neck of the picture tube. Rotate the two rings around the neck of the tube until the picture is properly centered.

HOWARD W. SAMS & CO., INC. • Indianapolis 5, Indiana

H336

RCA VICTOR MODELS 21-D-8525, U, 21-D-8526, U, 21-D-8527, U, 21-D-8528, U, 21-D-8545, U, 21-D-8546, U, 21-D-8547, U, 21-D-8565, U, 21-D-8566, U, 21-D-8567, U, 21-D-8588, U, 21-D-8605, U, 21-D-8607, U, 21-D-8608, U, 24-D-8655, U, 24-D-8657, U, 24-D-8676, U, 24-D8678, U (Ch. KCS-108, C, D, E, F)

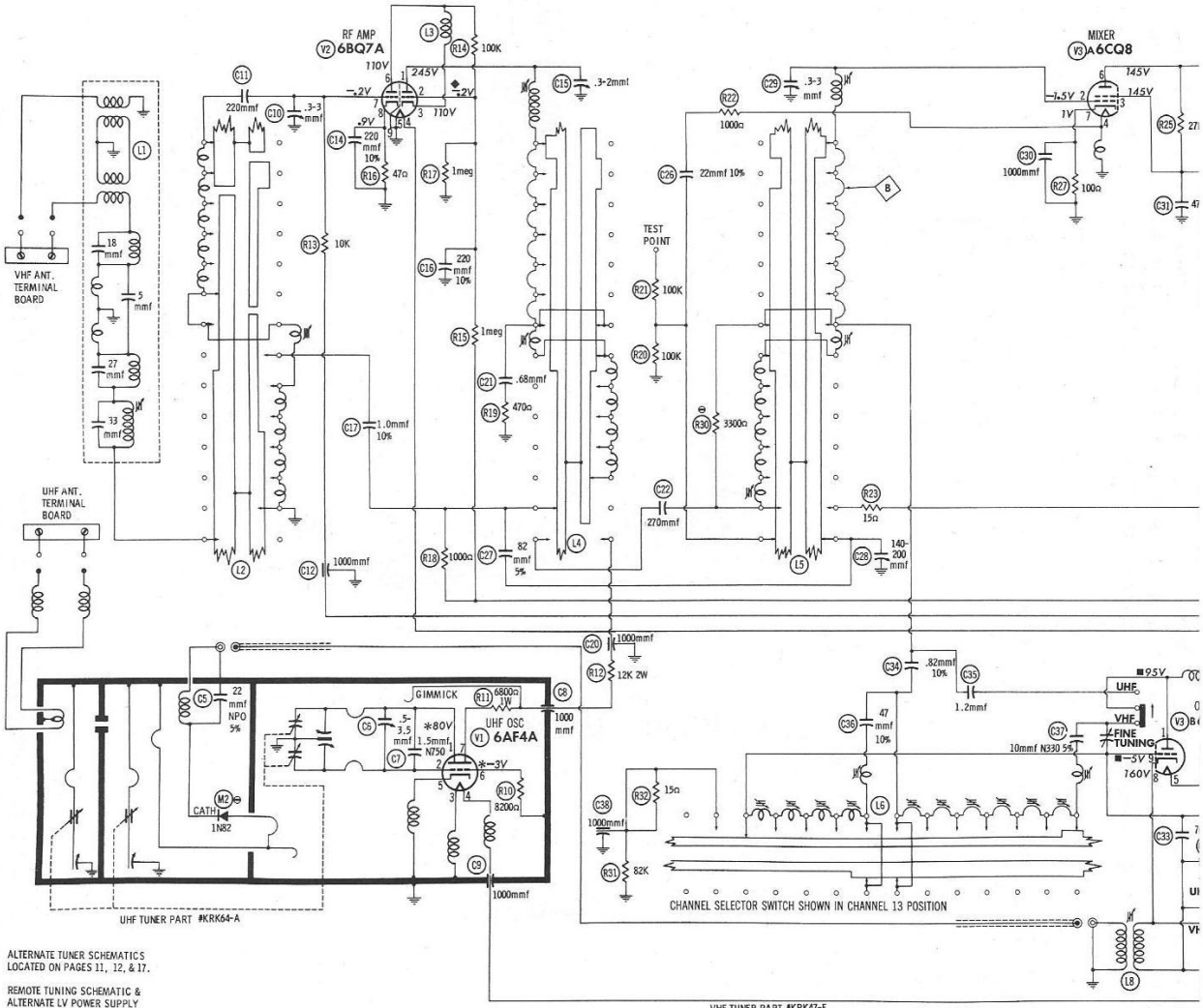

ALTERNATE TUNER SCHEMATICS LOCATED ON PAGES 11, 12, & 17.

REMOTE TUNING SCHEMATIC & ALTERNATE LV POWER SUPPLY SCHEMATIC LOCATED ON PAGE 18.

✱ MEASURED IN "UHF" POSITION.

◆ MEASURED FROM PIN 3 OF V2.

■ MEASURED FROM PIN 8 OF V3.

⊖ SEE PARTS LIST FOR ALTERNATE VALUE OR APPLICATION

DC COIL RESISTANCE VALUES UNDER ONE OHM NOT SHOWN ON SCHEMATIC

ARROWS ON CONTROLS INDICATE CLOCKWISE ROTATION (CONTROL VIEWED FROM SHAFT END)

WAVEFORMS TAKEN WITH CONTROLS SET TO PRODUCE 50 VOLTS PEAK-TO-PEAK SIGNAL AT PICTURE TUBE.

1. DC voltage measurements taken with vacuum tube voltmeter; AC voltage measured at 1,000 ohms per volt.
2. Pin numbers are counted in a clockwise direction on bottom of socket.
3. Measured values are from socket pin to common negative unless other wise stated.
4. Line voltage maintained at 117 volts for voltage readings.
5. All controls set for normal operation; no signal applied.

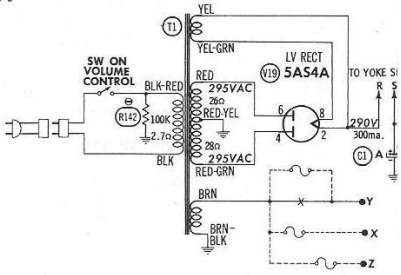

A PHOTOFACT STANDARD NOTATION SCHEMATIC

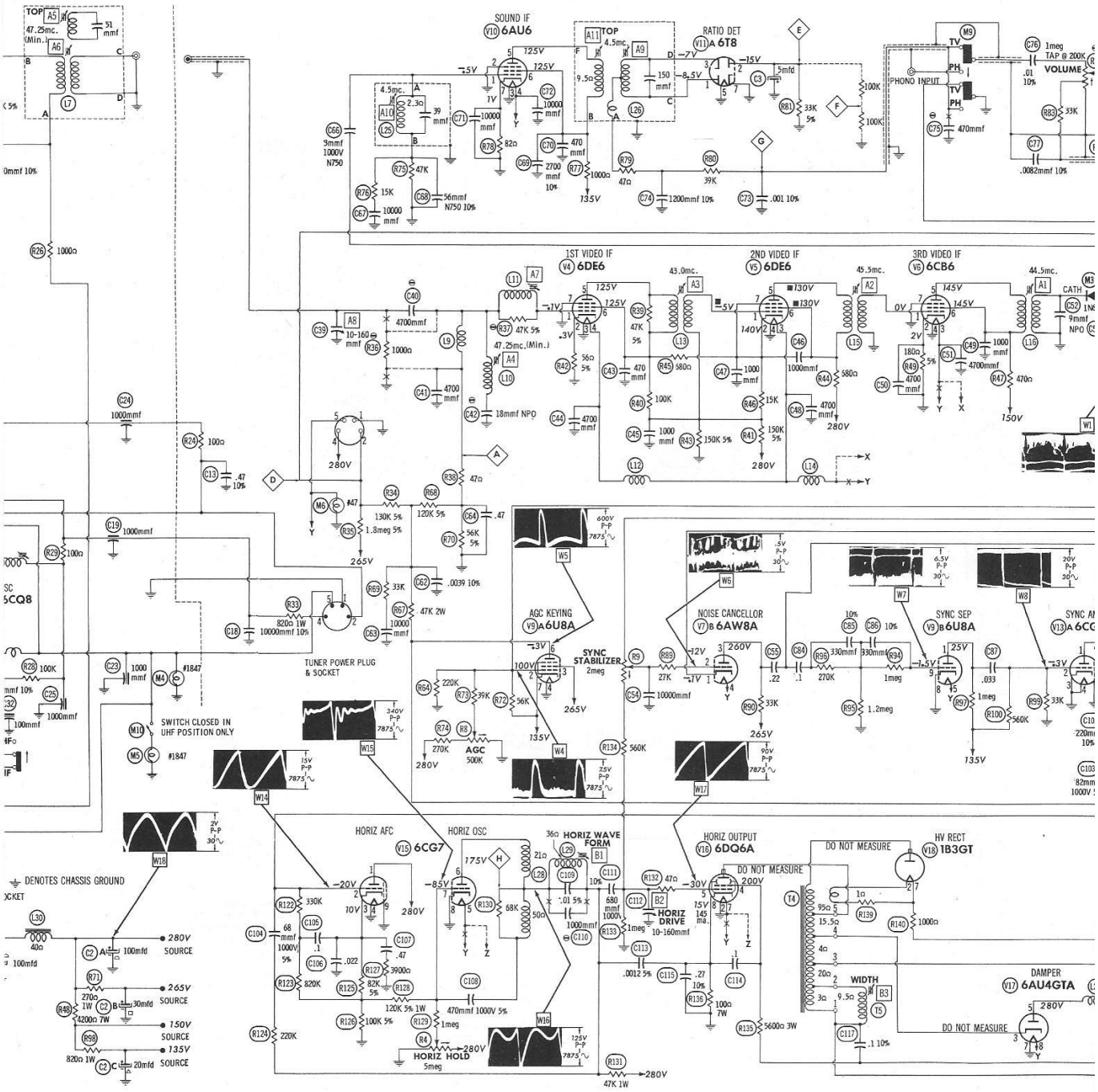
SOUND IF
V10 6AU6
RATIO DET
V11 A 6T8
1ST VIDEO IF
V4 6DE6
2ND VIDEO IF
V5 6DE6
3RD VIDEO IF
V6 6CB6
AGC KEYING
V9 A 6U8A
NOISE CANCELLOR
V7 B 6AW8A
SYNC SEP
V9 B 6U8A
SYNC AMP
V13 A 6CG
HORIZ AFC
V15 6CG7
HORIZ OSC
HORIZ WAVE FORM
HORIZ OUTPUT
V16 6DQ6A
HV RECT
V18 1B3GT
DAMPER
V17 6AU4GTA
PHONO INPUT
VOLUME
TUNER POWER PLUG & SOCKET
SWITCH CLOSED IN UHF POSITION ONLY
SYNC STABILIZER
HORIZ DRIVE
HORIZ HOLD
WIDTH
DO NOT MEASURE
DENOTES CHASSIS GROUND
280V SOURCE
265V SOURCE
150V SOURCE
135V SOURCE

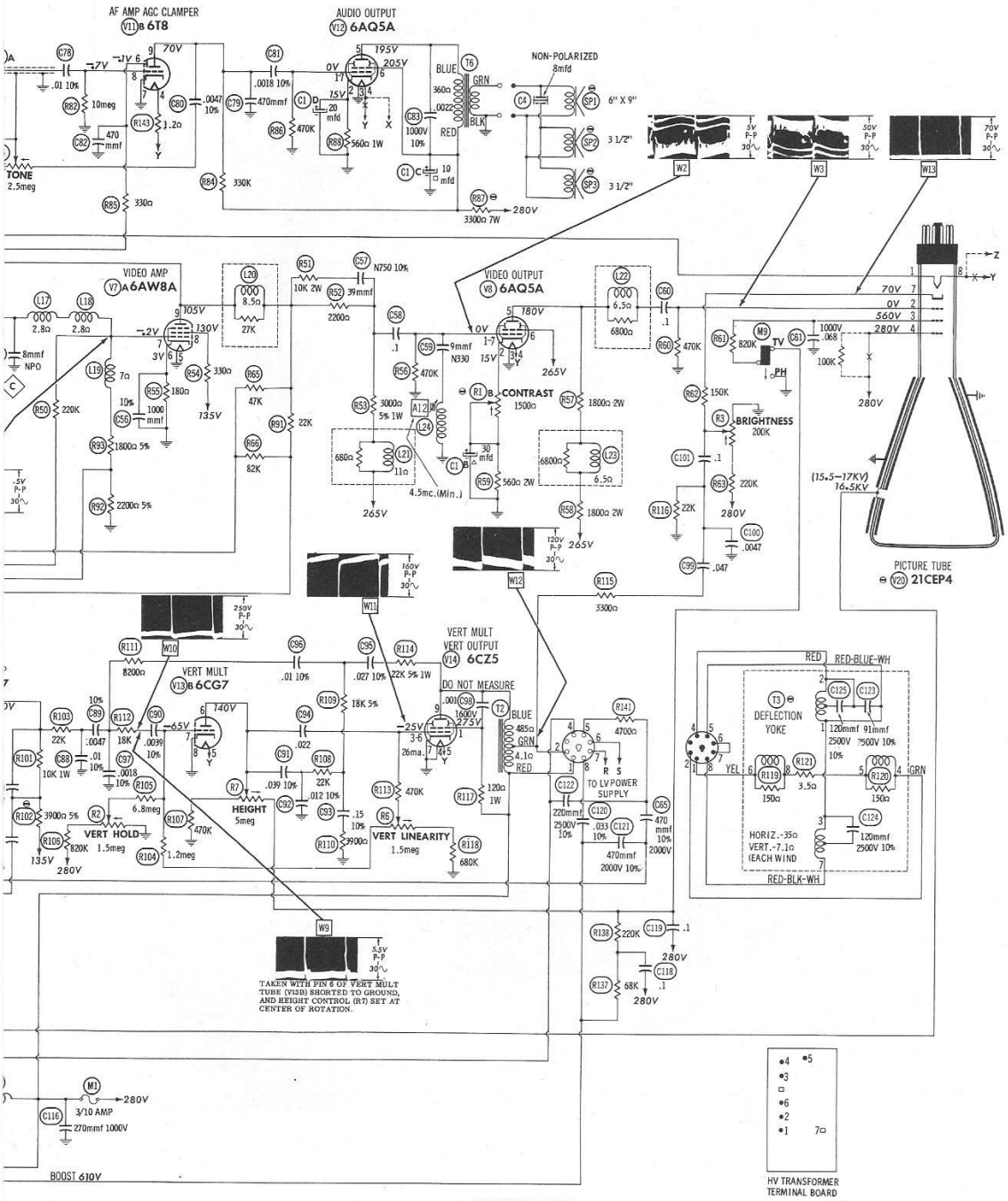

RCA VICTOR MODELS 21-D-8525, U, 21-D-8526, U, 21-D-8527, U, 21-D-8528, U, 21-D-8545, U, 21-D-8546, U, 21-D-8547, U, 21-D-8565, U, 21-D-8566, U, 21-D-8567, U, 21-D-8588, U, 21-D-8605, U, 21-D-8607, U, 21-D-8608, U, 24-D-8655, U, 24-D-8657, U, 24-D-8676, U, 24-D8678, U (Ch. KCS-108, C, D, E, F)

TUBE PLACEMENT CHART

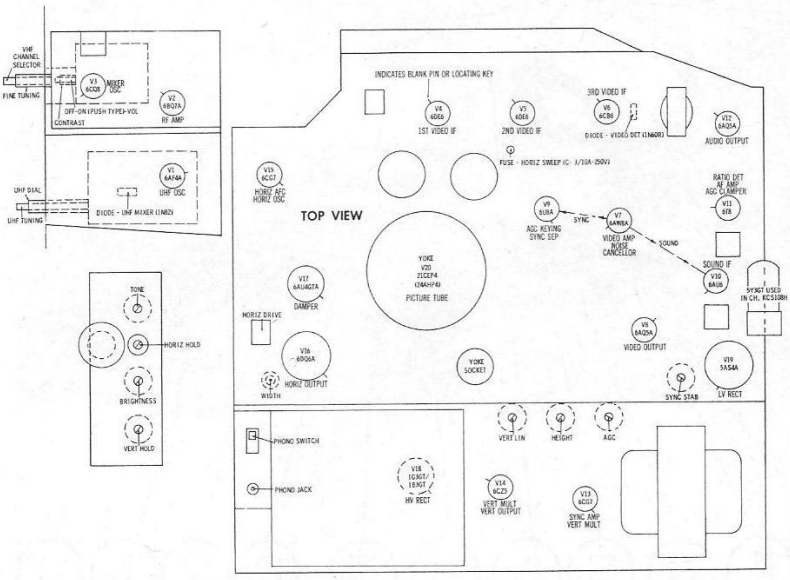

TUBE FAILURE CHECK CHART

The following chart lists tubes whose failures are most likely to produce the indicated symptoms. Refer to tube placement chart for location and type of tube.

POWER SUPPLY FAILURE
No raster, no sound - **V19, Some versions use 3 Filament Fuses**

LOSS OF PICTURE OR SOUND
No pic, no sound, has raster - **V4, V5, V6, Diode (M3), V7**
No pic, no sound, has snow - **V2, V3, V4, (V1 UHF only)**
No pic, has sound, has raster - **V8, V20**
Has pic, no sound - **V10, V11, V12**
Overloaded picture - **V9**

SYNC FAILURE
No vert. sync - **V7, V9, V13**
No horiz. sync - **V7, V9, V13, V15**
No vert. or horiz. sync - **V7, V9, V13**

SWEEP FAILURE
No raster, has sound - **Fuse (M1), V15, V16, V17, V18, V20**
No vertical deflection - **V13, V14**
Poor vert. linearity or foldover - **V13, V14**
Poor horiz. linearity or foldover - **V15, V16, V17**
Narrow picture - **V15, V16, V17, V20**
Vert. off freq. - **V13, V14**
Horiz. off freq. - **V15**

RCA VICTOR MODELS 21-D-8525, U, 21-D-8526, U, 21-D-8527, U, 21-D-8528, U, 21-D-8545, U, 21-D-8546, U, 21-D-8547, U, 21-D-8565, U, 21-D-8566, U, 21-D-8567, U, 21-D-8588, U, 21-D-8605, U, 21-D-8607, U, 21-D-8608, U, 24-D-8655, U, 24-D-8657, U, 24-D-8676, U, 24-D8678, U (Ch. KCS-108, C, D, E, F)

FOLDER 2

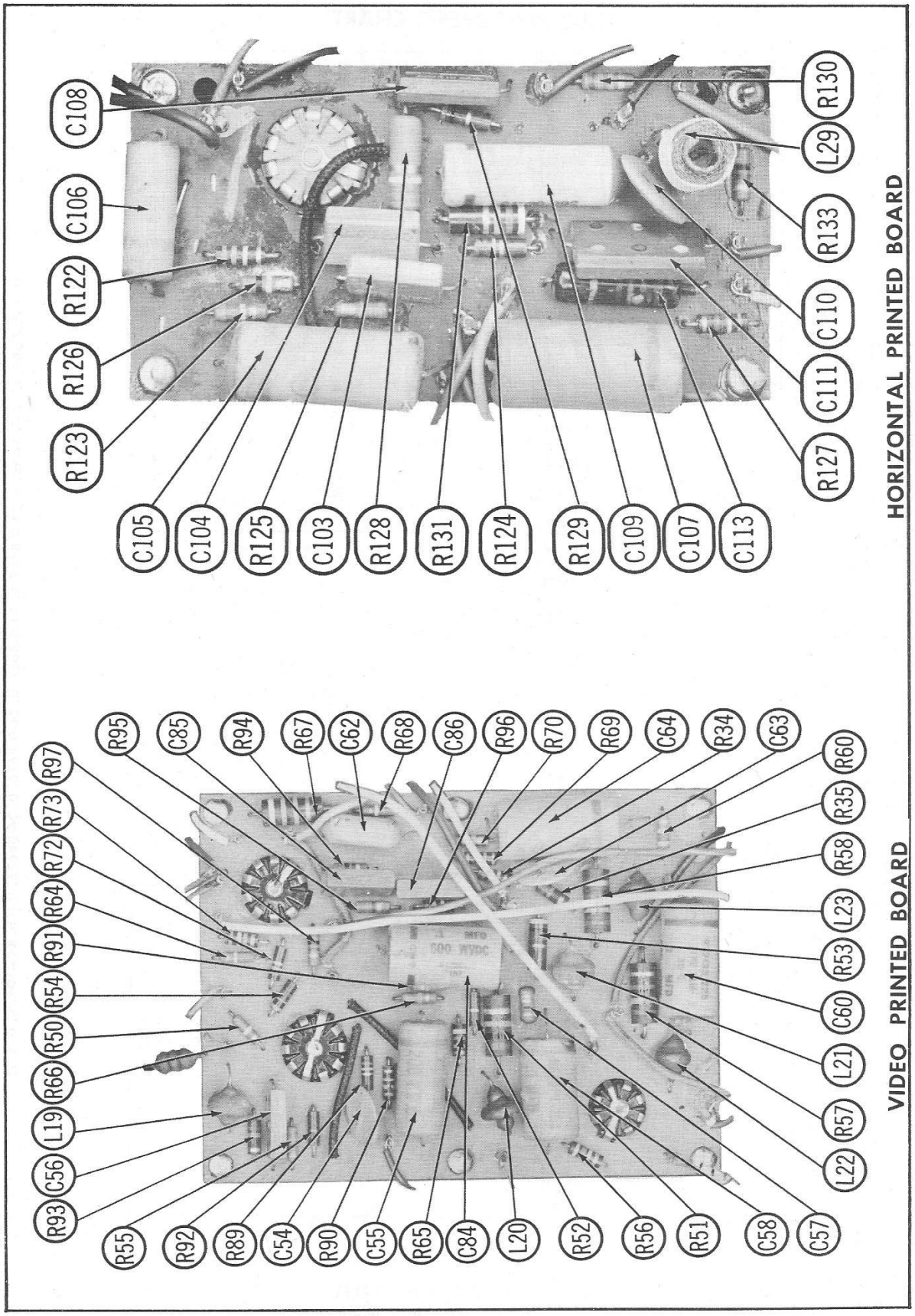
C108
C106
R122
R126
R123
C105
C104
R125
C103
R128
R131
R124
R129
C109
C107
C113
R127
C111
C110
R133
L29
R130
HORIZONTAL PRINTED BOARD
R95
C85
R94
R67
C62
R68
C86
R96
R70
R69
C64
R34
C63
R60
R35
R58
L23
R53
C60
L21
R57
L22
C57
C58
R51
R56
R52
L20
C84
R65
C55
R90
C54
R89
R92
R55
R93
C56
L19
R66
R50
R54
R91
R64
R72
R73
R97
VIDEO PRINTED BOARD

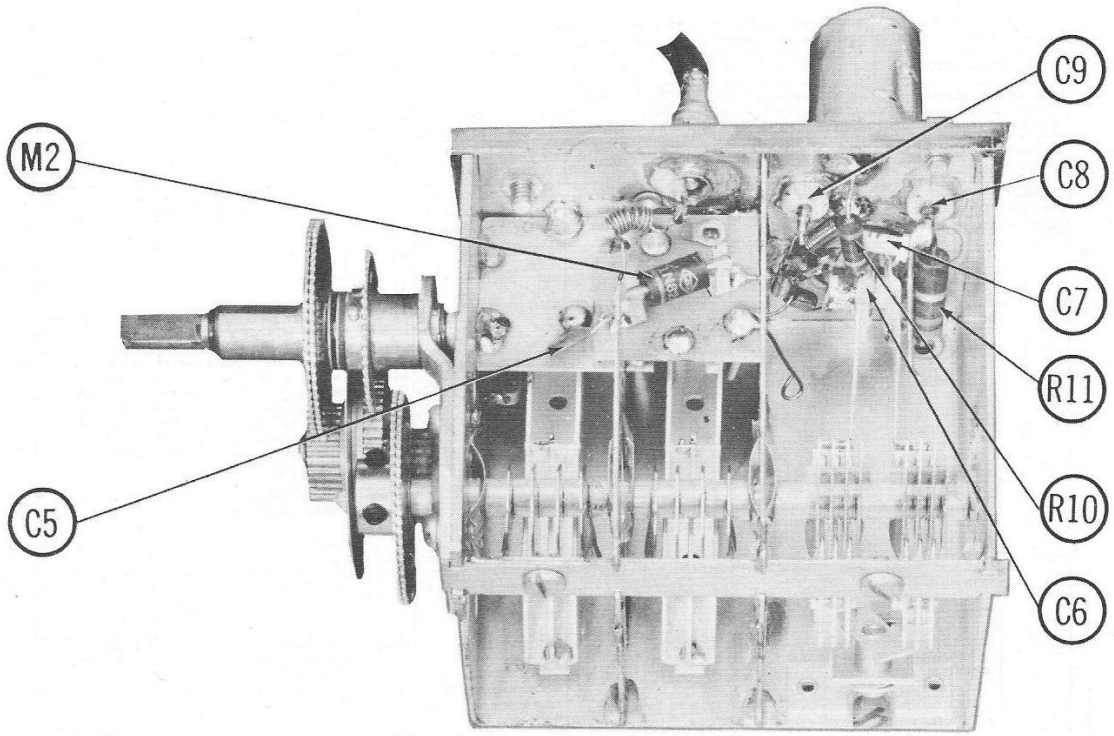

UHF TUNER-RIGHT SIDE

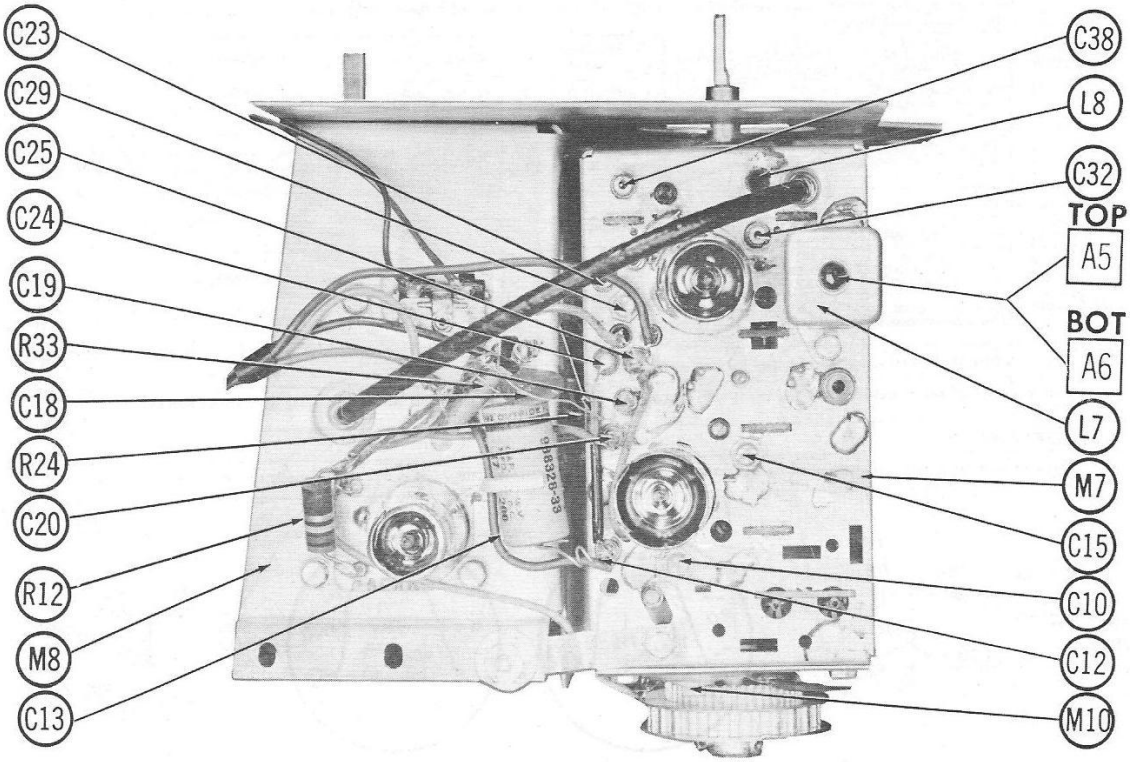

RF TUNER-TOP VIEW

PRE-ALIGNMENT INSTRUCTIONS

ALIGNMENT INSTRUCTIONS

The high voltage lead should be securely taped and kept away from the chassis.
Allow a 20 minute warm-up period for the receiver and test equipment.

VIDEO IF ALIGNMENT

Connect the negative lead of a 6 volt bias supply to point Ⓐ. Positive to chassis.
Connect the synchronized sweep voltage from the sweep generator to the horizontal input of the oscilloscope for horizontal deflection.
The sweep generator output lead should be terminated with its characteristic impedance, usually 50 ohms.

	DUMMY ANTENNA	SWEEP GENERATOR COUPLING	SWEEP GENERATOR FREQUENCY	MARKER GENERATOR FREQUENCY	CHANNEL	CONNECT SCOPE	ADJUST	REMARKS
1.	1500mmf Ceramic Capacitor	High side to point Ⓑ. Low side to chassis.	Not used	44.5MC (Unmod)	Any non-interfering channel	USE VTVM. DC probe to point Ⓒ. Common to chassis.	A1	Attenuate generator output to maintain not more than -3 volts on VTVM. Adjust for maximum deflection.
2.	"	"	"	45.5MC	"	"	A2	"
3.	"	"	"	43.0MC	"	"	A3	"
4.	"	"	"	47.25MC	"	"	A4, A5	Increase generator output and adjust A4 and A5 for MINIMUM deflection.
5.	"	"	44.0MC (10MC Swp)	42.5MC 45.75MC	"	Vert. Amp. thru detector (Fig.1) to pin 5 (plate) of 6DE6 (V4) 1st. video IF amp. Low side to chassis.	A6, A7, A8	Connect the negative lead of a 3 volt bias supply to point Ⓓ. Connect a 180Ω resistor from plate to screen (pin 5 to 6) of 6DE6 1st. video IF amp. (V4). Use only enough sweep generator output to provide a usable pattern on scope. Adjust for maximum gain and symmetry of response similar to Fig. 2 with markers as shown.
6.	"	"	"	42.5MC 45.0MC 45.75MC	"	Remove detector. Vert. Amp. thru 10K to point Ⓒ. Low side to chassis.	A1, A2, A3	Retouch A1 thru A3, if necessary for response similar to Fig. 3.
7.	"	High side thru pad (Fig. 4) to point Ⓑ. Low side to chassis.	Not used	45.75MC	"	USE VTVM. DC probe to point Ⓒ. Common to chassis.		Adjust generator output for exactly 1½ volt on VTVM.
8.	"	Remove pad. High side to point Ⓑ. Low side to chassis.	"	41.25MC	"	USE VTVM. DC probe to point Ⓓ. Common to chassis. Also connect scope as in step 6.	A3, A1	Retouch A3 and A1 for 1.2 to 1.5 volts on VTVM while maintaining response similar to Fig. 3.
9.	Two 130Ω Carbon Resistors	Across VHF antenna terminals with 130Ω in each lead.	44.0MC (10MC Swp)	42.5MC 45.0MC 45.75MC	All VHF channels	Vert. Amp. thru 10K to point Ⓒ. Low side to chassis.	A1, A2,	SLIGHTLY retouch A1 and A2 to correct for any overall tilt that is approximately the same on all channels.

SOUND IF ALIGNMENT

Connect two matched 100K (±1%) resistors in series from point Ⓔ to chassis. The junction of these two resistors is alignment point Ⓕ as shown on the schematic.

	DUMMY ANTENNA	SIGNAL GENERATOR COUPLING	SIGNAL GENERATOR FREQUENCY	CHANNEL	CONNECT VTVM	ADJUST	REMARKS
10.	.01mfd	High side to point Ⓒ. Low side to chassis.	4.5MC (Unmod)	Any non-interfering channel	DC probe to point Ⓔ. Common to chassis.	A9, A10, A11	Adjust for maximum deflection.
11.	"	"	"	"	DC probe to point Ⓖ. Common to point Ⓕ.	A9	Adjust for zero reading. A positive and negative reading will be obtained on either side of the correct setting.

4.5MC TRAP ALIGNMENT

Set the contrast control fully clockwise.

	DUMMY ANTENNA	SIGNAL GENERATOR COUPLING	SIGNAL GENERATOR FREQUENCY	CHANNEL	CONNECT VTVM	ADJUST	REMARKS
12.	.01mfd	High side to point Ⓒ. Low side to chassis.	4.5MC (400~ 30% AM)	Any non-interfering channel	Vert. Amp. thru diode probe to pin 2 (grid) of picture tube.	A12	Adjust for MINIMUM 400~ indication on scope.

ALTERNATE 4.5MC TRAP ALIGNMENT USING ON THE AIR SIGNAL

Tune in a local TV station and adjust the fine tuning until beat pattern is seen in the picture. Adjust A12 until scanning lines are smooth and continuous.

TUNER ALIGNMENT

This portion of the receiver has been properly aligned at the factory and is very stable. Alignment of this portion should not be required in the field.

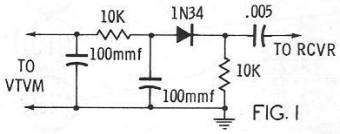

FIG. 1

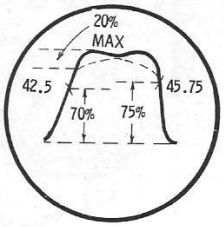

FIG. 2

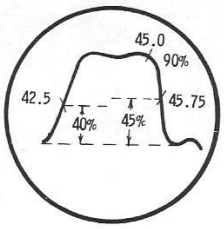

FIG. 3

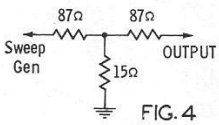

FIG. 4

RCA VICTOR MODELS 21-D-8525, U, 21-D-8526, U, 21-D-8527, U, 21-D-8528, U, 21-D-8545,
U, 21-D-8546, U, 21-D-8547, U, 21-D-8565, U, 21-D-8566, U, 21-D-8567, U, 21-D-8588, U, 21-D-8605,
U, 21-D-8607, U, 21-D-8608, U, 24-D-8655, U, 24-D-8657, U, 24-D-8676, U, 24-D8678, U (Ch. KCS-108, C, D, E, F)

CHASSIS BOTTOM VIEW

FOLDER 2

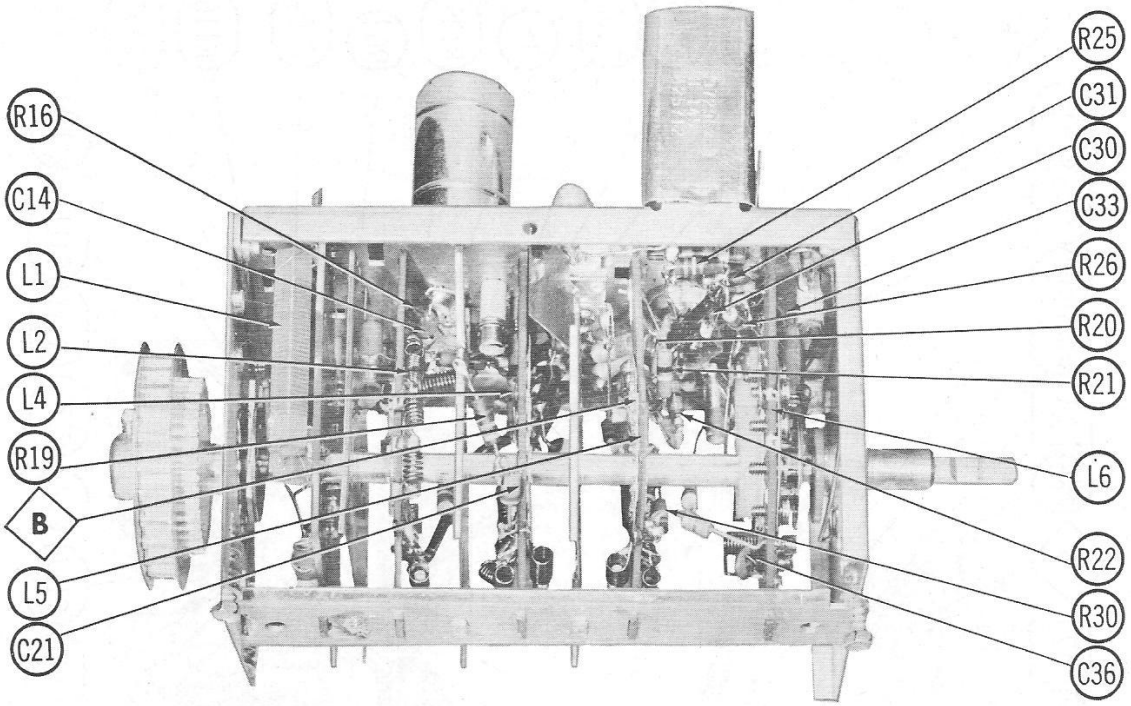

RF TUNER-LEFT SIDE

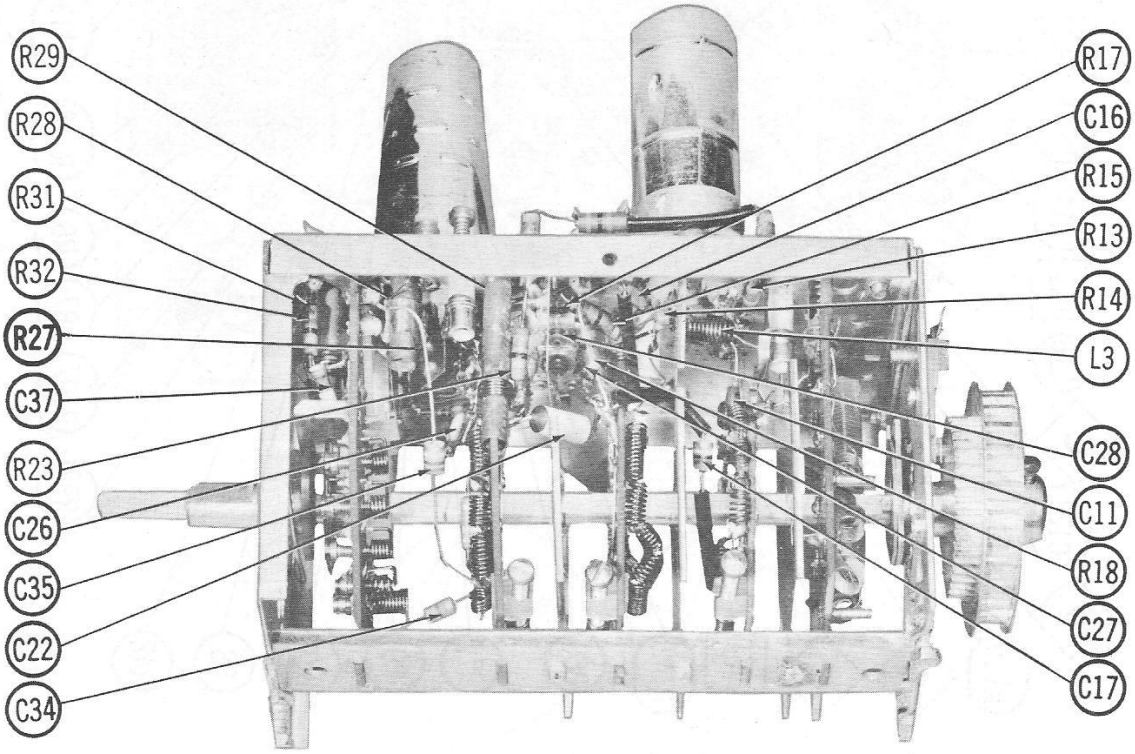

RF TUNER-RIGHT SIDE

RCA VICTOR MODELS 21-D-8525, U, 21-D-8526, U, 21-D-8527, U, 21-D-8528, U, 21-D-8545, U, 21-D-8546, U, 21-D-8547, U, 21-D-8565, U, 21-D-8566, U, 21-D-8567, U, 21-D-8588, U, 21-D-8605, U, 21-D-8607, U, 21-D-8608, U, 24-D-8655, U, 24-D-8657, U, 24-D-8676, U, 24-D8678, U (Ch. KCS-108, C, D, E, F)

CHASSIS TOP VIEW

FOLDER 2

RESISTANCE MEASUREMENTS

ITEM	TUBE	Pin 1	Pin 2	Pin 3	Pin 4	Pin 5	Pin 6	Pin 7	Pin 8	Pin 9
V1	6AF4A	*† 14K	*8200Ω	*0Ω	*.1Ω	*.1Ω	*8200Ω	*† 14K		
V2	6BQ7A	† 1800Ω	500K	INF	.1Ω	0Ω	INF	260K	47Ω	0Ω
V3	6CQ8	† 920Ω	100K	INF	0Ω	.1Ω	INF	100Ω	INF	† 100K
V4	6DE6	56K	56Ω	0Ω	.1Ω	▲ 680Ω	▲ 680Ω	0Ω		
V5	6DE6	▲ 15K	85K	.1Ω	0Ω	† 680Ω	† 680Ω	85K		
V6	6CB6	.2Ω	180Ω	.1Ω	0Ω	† 4700Ω	† 4700Ω	0Ω		
V7	6AW8A	2200Ω	● 750K	† 33K	.1Ω	0Ω	180Ω	4000Ω	† 5000Ω	† 12K
V8	6AS5A	470K	● 800Ω	0Ω	.1Ω	† 3800Ω	† 270Ω	470K		
V9	6U8A	† 1meg	35K	† 270Ω	0Ω	.1Ω	200K	† 4500Ω	0Ω	2.2meg
V10	6AU6	47K	0Ω	0Ω	.1Ω	† 6000Ω	† 6000Ω	82Ω		
V11	6T8	INF	33K	INF	.1Ω	0Ω	2500Ω	0Ω	10meg	† 330K
V12	6AQ5A	470K	560Ω	.1Ω	0Ω	† 3600Ω	† 3300Ω	470K		
V13	6CG7	† 17K	33K	0Ω	0Ω	.1Ω	‡2.5meg	● 1.8meg	0Ω	0Ω
V14	6CZ5	† 150Ω	NC	● 1.2meg	0Ω	.1Ω	● 1.2meg	0Ω	NC	† 400Ω
V15	6CG7	† 0Ω	1.2meg	180K	0Ω	.1Ω	† 47K	200K	0Ω	0Ω
V16	6DQ6A	NC	0Ω	NC	† 5600Ω	1meg	NC	.1Ω	100Ω	TOP CAP ‡ 15.5Ω
V17	6AU4GTA	NC	NC	4meg	NC	† .5Ω	NC	.1Ω	0Ω	
V18	1G3GT/ 1B3GT	PINS 1 THRU 8 HAVE INFINITE RESISTANCE								TOP CAP ‡110Ω
V19	5AS4A	NC	¶	NC	28Ω	NC	26Ω	NC	¶	
V20	21CEP4	.2Ω	470K	1.1meg	† 100K	NC	NC	● 180K	.1Ω	

¶ THIS READING CAN VARY GREATLY, (10K MINIMUM), DUE TO THE CONDITION OF THE ELECTROLYTIC CAPACITOR CONNECTED IN THE ASSOCIATED CIRCUIT.
● THIS READING WILL VARY. CONTROL SET FOR NORMAL OPERATION.
* MEASURED IN "UHF" POSITION.
† MEASURED FROM 280V SOURCE.
‡ MEASURED FROM PIN 3 OF V17.
▲ MEASURED FROM PIN 7 OF V5.
NC NO CONNECTION.

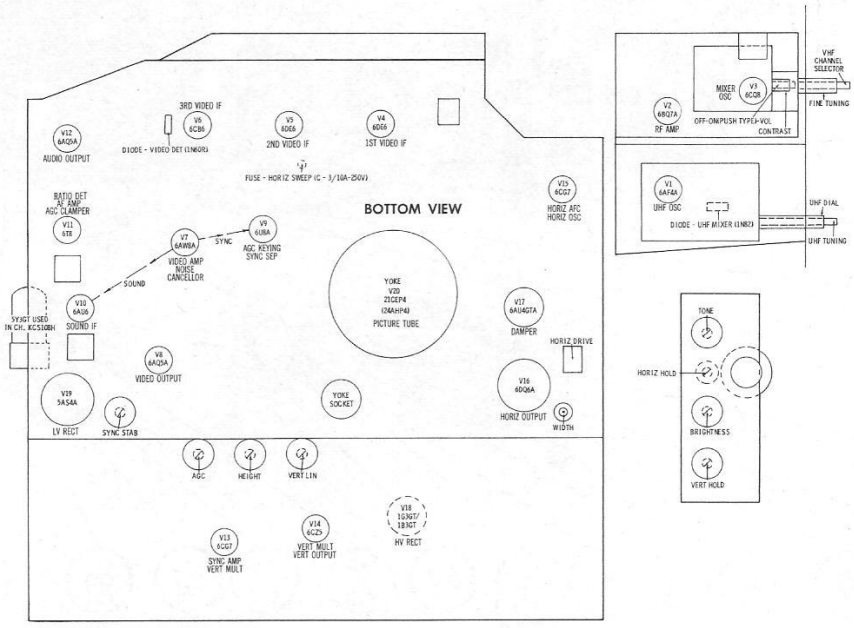

TUBE PLACEMENT CHART

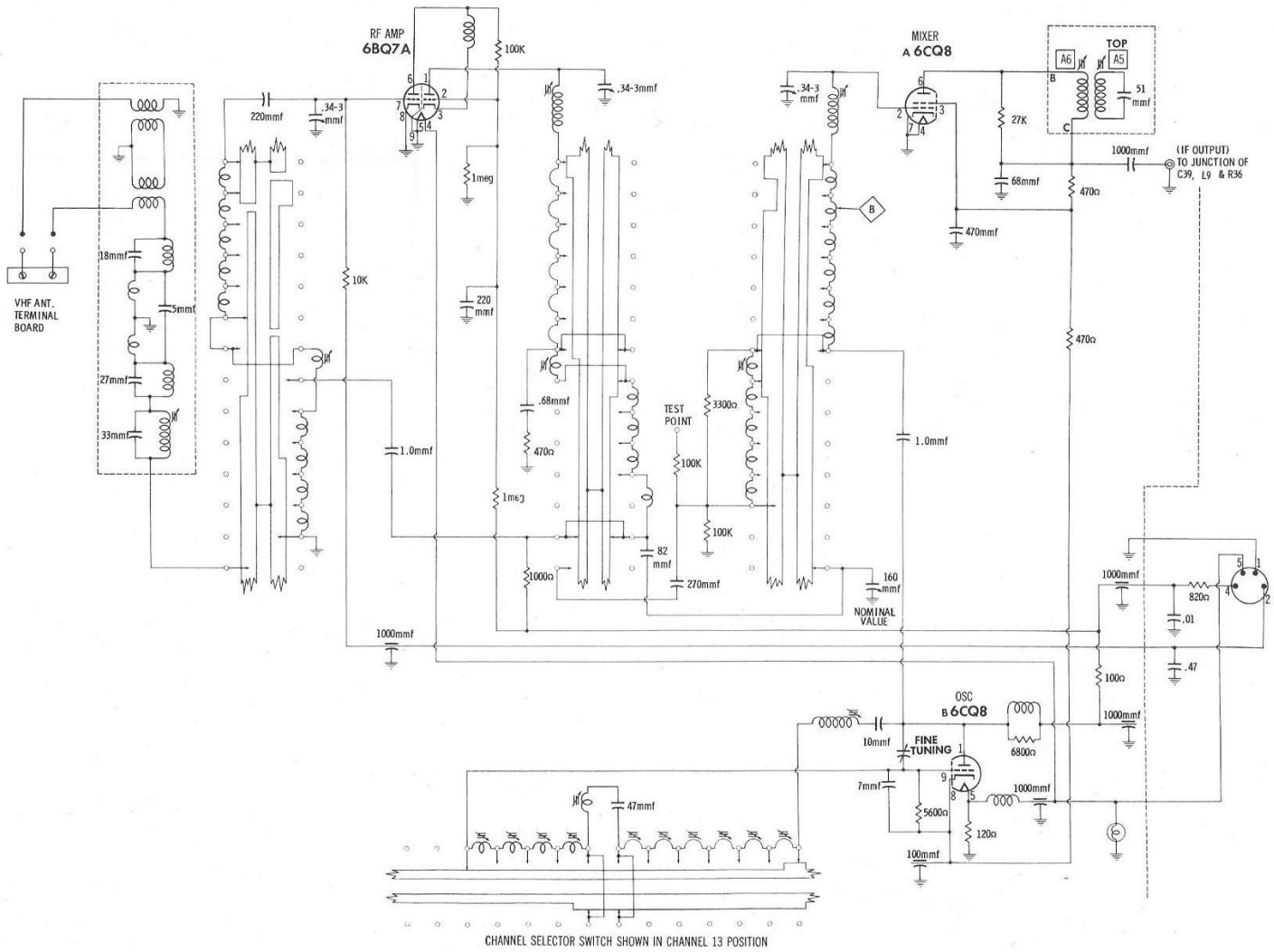

A PHOTOFACT STANDARD NOTATION SCHEMATIC
Howard W. Sams & Co., Inc. 1958

ALTERNATE TUNER SCHEMATIC

RCA VICTOR MODELS 21-D-8525, U, 21-D-8526, U, 21-D-8527, U, 21-D-8528, U, 21-D-8545, U, 21-D-8546, U, 21-D-8547, U, 21-D-8565, U, 21-D-8566, U, 21-D-8567, U, 21-D-8588, U, 21-D-8605, U, 21-D-8607, U, 21-D-8608, U, 24-D-8655, U, 24-D-8657, U, 24-D-8676, U, 24-D8678, U (Ch. KCS-108, C, D, E, F)

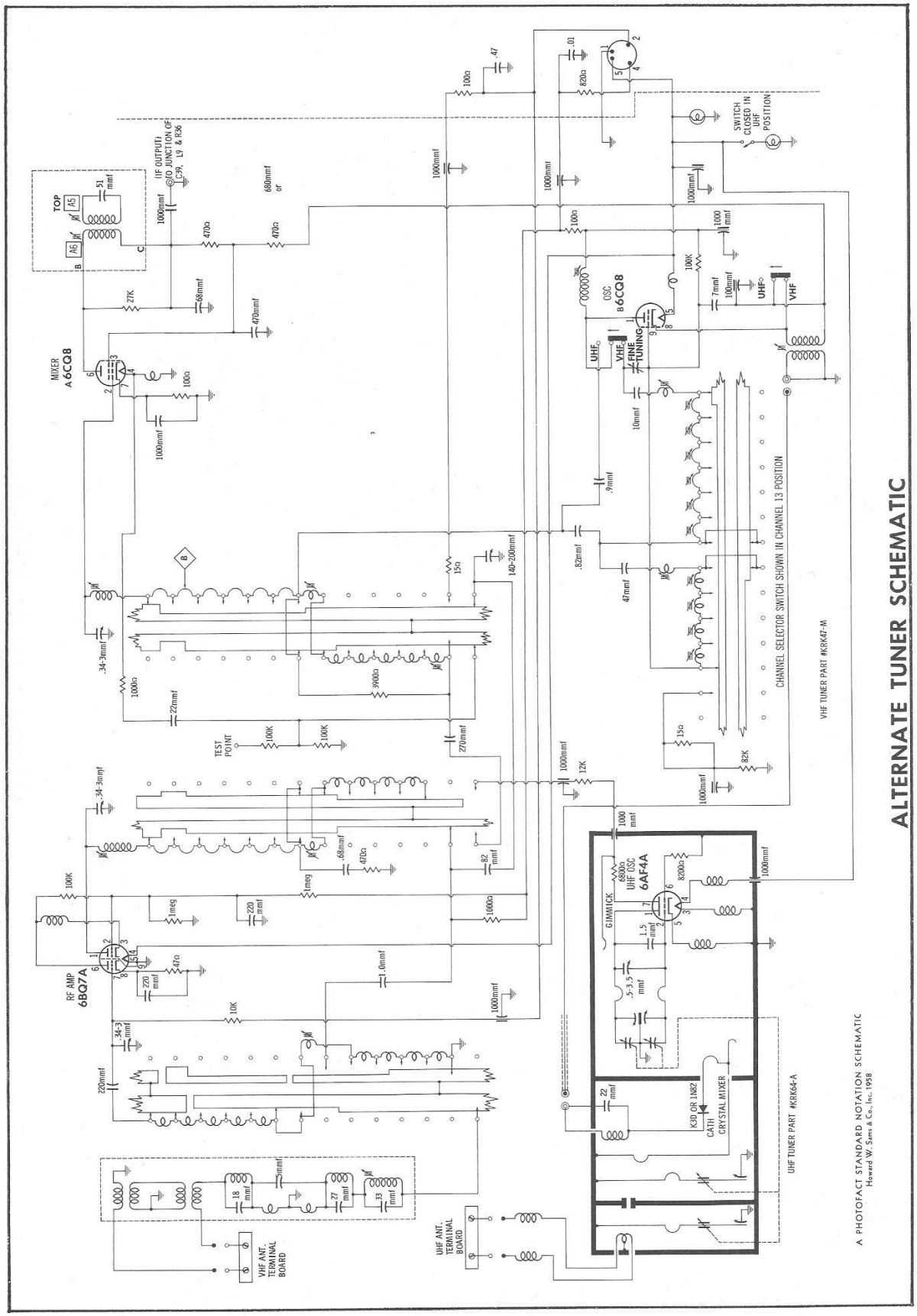
ALTERNATE TUNER SCHEMATIC
A PHOTOFACT STANDARD NOTATION SCHEMATIC
Howard W. Sams & Co., Inc. 1958
MIXER A 6CQ8
RF AMP 6BQ7A
OSC B 6CQ8
UHF OSC 6AF4A
GIMMICK
CRYSTAL MIXER
K3D OR 1N82
CATH
VHF FINE TUNING
UHF
VHF
SWITCH CLOSED IN UHF POSITION
CHANNEL SELECTOR SWITCH SHOWN IN CHANNEL 13 POSITION
VHF TUNER PART #KRK47-M
UHF TUNER PART #KRK64-A
TEST POINT
VHF ANT. TERMINAL BOARD
UHF ANT. TERMINAL BOARD
TOP
A5
A6
(IF OUTPUT) TO JUNCTION OF C39, L9 & R36

PARTS LIST AND DESCRIPTIONS

TUBES (GENERAL ELECTRIC, SYLVANIA)

ITEM No.	USE	TYPE	NOTES
V1	UHF Osc.	6AF4A	
V2	RF Amplifier	6BQ7A	
V3	Mixer-Osc.	6CQ8	
V4	1st. Video IF Amp.	6DE6	
V5	2nd. Video IF Amp.	6DE6	
V6	3rd. Video IF Amp.	6CB6	
V7	Video Amp. - Noise Cancellor	6AW8A	
V8	Video Output	6AQ5A	
V9	AGC Keying-Sync Sep.	6U8A	

ITEM No.	USE	TYPE	NOTES
V10	Sound IF Amp.	6AU6	
V11	Ratio Det.-AF Amp.-AGC Clamper	6T8	
V12	Audio Output	6AQ5A	
V13	Sync Amp.-Vert. Mult.	6CG7	
V14	Vert. Mult.-Vert. Output	6CZ5	
V15	Horiz. AFC-Horiz. Osc.	6CG7	
V16	Horiz. Output	6DQ6A	
V17	Damper	6AU4GTA	
V18	HV Rectifier	1G3GT/1B3GT	
V19	LV Rectifier	5AS4A	

PICTURE TUBE

ITEM No.	REPLACEMENT DATA				NOTES
	RCA Victor PART No.	GENERAL ELECTRIC PART No.	RCA PART No.	SYLVANIA PART No.	
V20	21CEP4 24AHP4		21CEP4 ① 24AHP4 ①	21CEP4 ②	① Silverama ② Silver screen "85"

ELECTROLYTIC CAPACITORS

ITEM No.	RATING		REPLACEMENT DATA						
	CAP.	VOLT.	RCA Victor PART No.	AEROVOX PART No.	CORNELL-DUBILIER PART No.	MALLORY PART No.	PYRAMID PART No.	SANGAMO PART No.	SPRAGUE PART No.
C1A	▲100	400	100858	AFHS4-57-90	D0875	FP420.7		Q-242	TVL-4663.5
B	▲30	50							
C	■10	400							
D	20	50							
C2A	▲100	400	104301	AFH4-06-40	C0365	FP389.1		Q-025	R2552 *
B	■30	400			BR3045	TC75		MT-4530	
C	▲20	400							
C3	5	50	78943	PRS50V5	BBR5-50	TC30	TD-5-50	MT-1504	TVA-1303
C4	8	10VNP	102847	AC-PRS10V8	BBR16-90 †	TC108	TD-16-150 †	MT-1516 †	R2201 *
					BBR16-90		TD-16-150	MT-1516	

* Non-catalog item.
† Connect negative leads together.

FIXED CAPACITORS

Capacity values given in the rating column are in mfd. for Paper Capacitors, and in mmfd. for Mica and Ceramic Capacitors.

ITEM No.	RATING		REPLACEMENT DATA							NOTES
	CAP.	VOLT	RCA Victor PART No.	AEROVOX PART No.	CENTRALAB PART No.	CORNELL-DUBILIER PART No.	ERIE PART No.	MALLORY PART No.	SPRAGUE PART No.	
C5	22		104915		TCZ-22		TCO-22		MS-422	NPO 5%
C6	.5-3.5						532-A			
C7	1.5		102978							N750
C8	1000		103997	EF-001	MFT-1000				503C-D1	
C9	1000		103997	EF-001	MFT-1000				503C-D1	
C10	.3-3		103553							
C11	220		100672	BPD-00022	DD-221	L10T22	ED-220	UC-5322	5GA-T22	
C12	1000		103517	EF-001	MFT-1000				503C-D1	
C13	.47	200	79148A					GEM-2047		10%
C14	220		100672		D6-221	L10T22	ED-220		MS-322	10%
C15	.3-2		103554							
C16	220		100672		D6-221	L10T22	ED-220		MS-322	10%
C17	1.0		77690	NPO-SI 1.0	TCZ-1		TCO-1		5TCCB-V1	10%
C18	10000		73960							10%
C19	1000		103517	EF-001	MFT-1000				503C-D1	
C20	1000		103517	EF-001	MFT-1000				503C-D1	
C21	.68		71504		TCZ-R68		TCO-.68			
C22	270		77838	SI 270	D6-271		GP-270	UC-5327	5GA-T27	
C23	1000		103517	EF-001	MFT-1000				503C-D1	
C24	1000		103517	EF-001	MFT-1000				503C-D1	
C25	1000		103517	EF-001	MFT-1000				503C-D1	
C26	22		103534	NPO-DI 22	DD-220	L10Q22	TCO-22		MS-422	10%
C27	82		103560	1469-000082	TCZ-82	22R5Q82	TCO-82		MS-482	5%
C28	140-200		103519							
C29	.3-3		103552							
C30	1000		77252	BPD-001	DD-102	BYA6D1	ED-1000	DC521	5HK-D1	
C31	470		78622		D6-471	5R5T47	ED-470		MS-347	10%
C32	100		103518	EF-0001	MFT-100				503C-T1	
C33	7		103523			C10V7C				10%
C34	.82		77689							10%
C35	1.2			NPO-SI 1.0	TCZ-1		TCO-1			
C36	47		103559	NPO-DI 47	DD-470	L10Q47	ED-47		MS-447	10%
C37	10		103556							N330 ±5mmf
C38	1000		103517	EF-001	MFT-1000				503C-D1	
C39	10-160		100849							
C40	4700		73473	BPD-0047	DD-472	BYA10D47	ED-0047	UC-5247	5GA-D47	①
C41	4700		73473	BPD-0047	DD-472	BYA10D47	ED-0047	UC-5247	5GA-D47	
C42	18				TCZ-18	CTA6Q18C	TCO-18			NPO②
C43	470		78622	BPD-00047	DD-471	BYA10T47	ED-470	UC-5347	5GA-T47	
C44	4700		73473	BPD-0047	DD-472	BYA10D47	ED-0047	UC-5247	5GA-D47	
C45	1000		77252	BPD-001	DD-102	BYA6D1	ED-1000	DC521	5HK-S1	
C46	1000		78623	BPD-001	DD-102	BYA6D1	ED-1000	DC521	5HK-S1	
C47	1000		77252	BPD-001	DD-102	BYA6D1	ED-1000	DC521	5HK-S1	
C48	4700		73473	BPD-0047	DD-472	BYA10D47	ED-0047	UC-5247	5GA-D47	
C49	1000		78623	BPD-001	DD-102	BYA6D1	ED-1000	DC521	5HK-D1	
C50	4700		73473	BPD-0047	DD-472	BYA10D47	ED-0047	UC-5247	5GA-D47	
C51	4700		73473	BPD-0047	DD-472	BYA10D47	ED-0047	UC-5247	5GA-D47	
C52	9		102647			C10V9C				NPO
C53	8		101439			C10V8C				NPO
C54	10000		73960	BPD-01	DD-103	BYA6S1	ED-01	DC511	5HK-S1	
C55	.22	200	104310	P288N-22		P288N-22		GEM-2022	2TM-P22	
C56	1000		102416	1464-001		1R5D1	ED-1000	MCB255	MS-21	10%
C57	39		102694	N750-SI 39	TCN-39	C10Q39U	TC7-39			N750 10%
C58	.1	600	104311	P688N-1	DF-104	CUB6P1		GEM-601	6TM-P1	
C59	9		102516							N330
C60	.1	600	104311	P688N-1	DF-104	CUB6P1		GEM-601	6TM-P1	

RCA VICTOR MODELS 21-D-8525, U, 21-D-8526, U, 21-D-8527, U, 21-D-8528, U, 21-D-8545, U, 21-D-8546, U, 21-D-8547, U, 21-D-8565, U, 21-D-8566, U, 21-D-8567, U, 21-D-8588, U, 21-D-8605, U, 21-D-8607, U, 21-D-8608, U, 24-D-8655, U, 24-D-8657, U, 24-D-8676, U, 24-D8678, U (Ch. KCS-108, C, D, E, F)

FOLDER 2

PARTS LIST AND DESCI

CAPACITORS (cont)

ITEM No.	RATING CAP.	RATING VOLT	RCA Victor PART No.	AEROVOX PART No.	CENTRALAB PART No.	CORNELL-DUBILIER PART No.	ERIE PART No.	MALLORY PART No.	SPRAGUE PART No.	NOTES
			REPLACEMENT DATA							
C61	.068	1000	73815	P1088N-068		CUB10S68		GEM-10168	10TM-S68	
C62	.0039	400	102218-A							10%
C63	10000		73960	BPD-01	DD-103	BYA6S1	ED-01	DC511	5HK-S1	
C64	.47	200	79148-A	P288N-47		CUB2P47		GEM-2047	2TM-P47	
C65	470	2000	104383							10%
C66	3	1000	102415							N750
C67	10000		73960	BPD-01	DD-103	BYA6S1	ED-01	DC511	5HK-S1	
C68	56		102207	N750-SI 56	TCN-56	C10Q56U	TC7-56			N750 10%
C69	2700		104131			1R5D27	CY20C272K		MS-227	10%
C70	470		78622	BPD-00047	DD-471	BYA10T47	ED-470	UC-5347	5GA-T47	
C71	10000		73960	BPD-01	DD-103	BYA6S1	ED-01	DC511	5HK-S1	
C72	10000		102233	BPD-01	DD-103	BYA6S1	ED-01	DC511	5HK-S1	
C73	.001	400	102426-A							10%
C74	1200		104384			1R5D12	ED-1200		MS-212	10%
C75	470		78622	BPD-00047	DD-471	BYA10T47	ED-470	UC-5247	5GA-T47	③
C76	.01	200	79316					GEM-1611		10%
C77	.0082	200	102517-A					GEM-16282		10%
C78	.01	200	101000-A					GEM-1611		10%
C79	470		104380	BPD-00047	DD-471	BYA10T47	ED-470	UC-5347	5GA-T47	
C80	.0047	400	73920					GEM-16247		10%
C81	.0018	400	102217-A							10%
C82	470		73960	BPD-00047	DD-471	BYA10T47	ED-470	UC-5347	5GA-T47	
C83	.0022	1000	73803							10%
C84	.1	600	104311	P688N-1	DF-104	CUB6P1		GEM-601	6TM-P1	
C85	330		102656	1464-00033	D6-331	5R5T33	ED-330		MS-333	10%
C86	330		102656	1464-00033	D6-331	5R5T33	ED-330		MS-333	10%
C87	.033	400	104143	P488N-033	DF-303	CUB6S33		GEM-4133	4TM-S33	
C88	.01	400	102220-A					GEM-1611		10%
C89	.0047	600	102225-A					GEM-16247		10%
C90	.0039	600	73796							10%
C91	.039	400	73790							10%
C92	.012	400	79781							10%
C93	.15	200	104146							10%
C94	.022	600	104145	P688N-022	DD-203	CUB6S22	ED-02	GEM-6122	6TM-S22	
C95	.027	600	75345							10%
C96	.01	200	79316					GEM-1611		10%
C97	.0018	600	77727							10%
C98	.001	1600	73849	P1688N-001		CUB16D1		GEM-3021	MB-D1	
C99	.047	400	73553	P488N-047	DF-503	CUB4S47		GEM-4147	4TM-S47	
C100	.0047	400	79017	P488N-0047	D6-472	CUB6D47	GP-4700	GEM-6247	6TM-D47	
C101	.1	400	73551	P488N-1	DF-104	CUB4P1		GEM-401	4TM-P1	
C102	220		104144	1469-00022	D6-221	22R5T22	ED-220		MS-322	10%
C103	82	1000	76474							5%
C104	68	1000	76475							5%
C105	.1	400	73551	P488N-1	DF-104	CUB4P1		GEM-401	4TM-P1	
C106	.022	400	103351-A	P488N-022	DD-203	CUB4S22	ED-02	GEM-4122	4TM-S22	
C107	.47	200	79148-A	P288N-47		CUB2P47		GEM-2047	2TM-P47	
C108	470	1000	104147							5%
C109	.01	600	73594							5%
C110	1000			BPD-001	DD-102	BYA6D1	ED-1000	DC521	5HK-D1	④
C111	680	1000	78796							10%
C112	10-180		100849							
C113	.0012	600	76995							5%
C114	.1	600	73557	P688N-1	DF-104	CUB6P1		GEM-601	6TM-P1	
C115	.27	200	73786							10%
C116	270	1000	76579			5P15T25				
C117	.1	600	73557							10%
C118	.1	400		P488N-1	DF-104	CUB4P1		GEM-401	4TM-P1	
C119	.1	400		P488N-1	DF-104	CUB4P1		GEM-401	4TM-P1	
C120	.033	400	73552							10%
C121	470	2000	104383							10%
C122	220	2500	104385							10%
C123	91	2500	103535							10%
C124	120	2500	103536							10%
C125	120	2500	103536							10%

① Not used in models with 24" picture tube.
② Models with a 24" picture tube use 10mmf 5% (Part #102895) in this application.
③ Not used in some versions.
④ Not used in some versions. Models with 24" picture tube and Ch. KCS108H use 680mmf (Part #105518) in this application.

CONTROLS

ITEM No.	RATING RESIST-ANCE	RATING WATTS	RCA Victor PART No.	CENTRALAB PART No.	CLAROSTAT PART No.	IRC PART No.	MALLORY PART No.	INSTALLATION NOTES
			REPLACEMENT DATA					
R1A	1500Ω	½	104102				UE1925	Contrast - Note 1
B	1meg	½					Not Req.	Volume - Tap ⓐ 200K-Note 1
C	Switch						Not Req.	
R2A	1.5meg	½	104089	B-742	A47-1.5meg -S	Q11-138	U155	Vert. Hold
B	Shaft			Not Req.	FS-3	Not Req.	Not Req.	
R3A	200K	½	104088	B-46	A47-200K-S	Q11-129	U43	Brightness
B	Shaft			Not Req.	FS-3	Not Req.	Not Req.	
R4A	5meg	½	104090	AB-87	A47-5meg-S	Q11-141	PTA56L	Horiz. Hold
B	Shaft			AK-19	RN-3	TQ	Not Req.	
R5A	2.5meg	½	104103	B-83	A47-2.5meg -S	Q11-239	U255	Tone
B	Shaft			Not Req.	FS-3	Not Req.	Not Req.	
R6A	1.5meg	½	102408	BX-742		B11-138	TA155L	Vert. Lin.
B	Shaft			Not Req.		TM2-Kit	Not Req.	
R7A	5meg	½	100290			B11-141	PTA56L	Height
B	Shaft					TM2-Kit	Not Req.	
R8A	500K	½	100862			B17-133	PTA55R	AGC
B	Shaft					TM2-Kit	Not Req.	
R9A	2meg	½	100863	BX-75	A47-2meg-S	Q11-139	TA26L	Sync Stab
B	Shaft			Not Req.	FKS-1/4	RQ	Not Req.	

Note 1. Chassis KCS108H uses part #105856 in this application.

RESISTORS

All wattages 1/2 watt, or less, unless otherwise listed.

ITEM No.	RATING OHMS	RATING WATT	RCA Victor PART No.	NOTES
R10	8200Ω		502282	
R11	6800Ω	1	512268	
R12	12K	2	522312	
R13	10K		502310	
R14	100K		502410	
R15	1meg		502510	
R16	47Ω		502047	
R17	1meg		502510	
R18	1000Ω		502210	
R19	470Ω		502147	
R20	100K		502410	
R21	100K		502410	
R22	1000Ω		502210	
R23	15Ω		502015	
R24	100Ω		502110	
R25	27K 5%		502327	
R26	1000Ω		502210	
R27	100Ω		502110	
R28	100K		502410	
R29	100Ω		502110	
R30	3300Ω		502233	Note 1
R31	82K		502382	
R32	15Ω		502015	
R33	820Ω	1	512182	
R34	130K 5%		502413	
R35	1.8meg 5%		502518	
R36	1000Ω		502210	Note 2
R37	47K 5%		502347	Note 3
R38	47Ω		502047	
R39	47K 5%		502347	
R40	100K		502410	
R41	150K 5%		502415	
R42	56Ω 5%		502056	
R43	150K 5%		502415	
R44	680Ω		502168	
R45	680Ω		502168	
R46	15K		502315	
R47	470Ω		502147	
R48	4200Ω	7	100846	
R49	180Ω 5%		502118	
R50	220K		502422	
R51	10K	2	522310	
R52	2200Ω		502222	
R53	3000Ω 5%	1	512230	
R54	330Ω		502133	
R55	180Ω		502118	
R56	470K		502447	
R57	1800Ω	2	522218	
R58	1800Ω	2	522218	
R59	560Ω	2	522156	
R60	470K		502447	
R61	820K		502482	
R62	150K		502415	
R63	220K		502422	
R64	220K		502422	
R65	47K		502347	
R66	82K		502382	
R67	47K	2	522347	
R68	120K 5%		502412	
R69	33K		502333	
R70	56K 5%		502356	
R71	270Ω	1	512127	
R72	56K		502356	
R73	39K		502339	
R74	270K		502427	
R75	47K		502347	
R76	15K		502315	
R77	1000Ω		502210	
R78	82Ω		502082	
R79	47Ω		502047	
R80	39K		502339	
R81	33K 5%		502333	
R82	10meg		502610	
R83	33K		502333	
R84	330K		502433	

Note 1. Some versions may use a 3900Ω (Part #502239) in
Note 2. Models with 24" picture tube use a 150Ω (Part #5
Note 3. Models with 24" picture tube use a 27K (Part #50
Note 4. Chassis KCS108H use a 2000Ω 7W (Part #105869)
Note 5. Chassis KCS108H and Models with 24" picture tu
Note 6. Chassis KCS108H and Models with 24" picture tul

TRANSFORMER

ITEM No.	RATING PRI.	RATING SEC. 1	RATING SEC. 2	RATING SEC. 3	RCA Victor PART No.
T1	117V ⓐ1.9A	580VCT ⓐ.300A	5V ⓐ 3A	6.3V ⓐ 9.5A	104302 ①

① Chassis KCS108H use part #105873 in this application.

TRANSFORMERS (SW

ITEM No.	USE	RCA Victor PART No.	Halldorson PART No.	Merit PART No.
		REPLA		
T2	Vert. Output	104101		
T3A	Yoke-Horiz. (19MH)	104408 ①		
B	(110°)-Vert. (12MH)			
	Yoke Clamp	104409		
M11	Rear Cover & Centering Device	104077		
	Yoke Plug	51209		
T4	Horiz. Output	104309		
T5	Width Coil (1.6-11MH)	104086		MWC-9

① Includes resistors R119, R120, R121 and capacitors C123, C124

TRANSFORMER (AU

ITEM No.	IMPEDANCE PRI.	IMPEDANCE SEC.	RCA Victor PART No.	Halldorson PART No.	Merit PART No.	Stan PART
			REPLACEMENT DATA			
T6	7600Ω	3-4Ω	100037	Z1003	A-3020	A-384

SPEAKE

ITEM No.	TYPE SIZE	TYPE FIELD	TYPE V. C. IMP.	RCA Victor PART No.	QUAM PART No.
				REPLACEMENT DATA	
SP1	6" x 9"	PM	3-4Ω	101182 ①	69A3
SP2	3½"	PM	9Ω	102119 ①②	3A15TZ9
SP3	3½"	PM	9Ω	102119 ①②	3A15TZ9
	8"	PM	3-4Ω	74664 ②	8A21

RIPTIONS (Continued)

RS (cont)

ITEM No.	RATING OHMS	RATING WATT	RCA Victor PART No.	NOTES
85	330Ω		502133	
86	470K		502447	
87	3300Ω	7	102417	Note 4
88	560Ω	1	512156	
89	27K		502327	
90	33K		502333	
91	22K		502322	
92	2200Ω 5%		502222	
93	1800Ω 5%		502218	
94	1meg		502510	
95	1.2meg		502512	
96	270K		502427	
97	1meg		502510	
98	820Ω	1	512182	
99	33K		502333	
100	560K		502456	
101	10K	1	512310	
102	3900Ω 5%		502239	Note 5
103	22K		502322	
104	1.2meg		502512	
105	6.8meg		502568	
106	820K		502482	
107	470K		502447	
108	22K		502322	
109	18K 5%		502318	
110	3900Ω		502239	
111	8200Ω		502282	
112	18K		502318	
113	470K		502447	
114	22K 5%	1	512322	
115	3300Ω		502233	
116	22K		502322	
117	150Ω	1	512115	
118	680K		502468	
119	150Ω		502115	
120	150Ω		502115	
121	3.5Ω			
122	330		502433	
123	820K		502482	
124	220K		502422	
125	82K 5%		502382	
126	100K 5%		502410	
127	3900Ω		502239	
128	120K 5%	1	512412	
129	1meg		502510	
130	68K		502368	
131	47K	1	512347	
132	47Ω		502047	
133	1meg		502510	
134	560K		502456	
135	5600Ω	3	104180	
136	100Ω	7	104188	
137	68K		502368	
138	220K		502422	
139	1Ω		104382	
140	1000Ω		502210	
141	4700Ω		502247	
142	100K		502410	Note 6
143	1.2Ω		72787	

this application.
02115) in this application.
23327) in this application.
in this application.
be use a 4700Ω (Part #502247) in this application.
be use a 820K (Part #502482) in this application.

(POWER)

REPLACEMENT DATA				
Halldorson PART No.	Merit PART No.	Stancor PART No.	Thordarson PART No.	Triad PART No.

EEP CIRCUITS)

EMENT DATA				NOTES
Ram PART No.	Stancor PART No.	Thordarson PART No.	Triad PART No.	
			A-115	
	DY-26A		Y-66-2	
201R15	WC-8	WC-22	WLC-6	

and C125.

DIO OUTPUT)

or No.	Thordarson PART No.	Triad PART No.	NOTES
9	26S48	S-9Z	

R

NOTES
① Used in Models 21-D-8565, U, 66, U, 67, U ② Used in Models 21-D-8525, U, 26, U, 27, U, 28, U, 45, U, 46, U, 47, U, 88, U, 21-D-8605, U, 07, U, 08, U, 24-D-8655, U, 57, U, 76, U, 78, U, 21-RD-8525

COILS (RF-IF)

ITEM No.	USE	RCA Victor PART No.	NOTES
L1	VHF Ant. Match. Trans. Assy.	103525	Includes traps
L2	VHF Ant. Coils	103564	Channel 2-13, Includes C11, C17 & stator assy.
L3	Neut. Coil	76562	
L4	RF Coils	103550	Channel 2-13, Includes C27, C21, R18, R19 & stator assy.
L5	Mixer Grid Coils	103551	Channel 2-13, includes C22 & stator assy.
L6	Osc. Coils	103549	Channel 2-13, includes C34, C37, C36 & stator assy.
L7	Mixer Plate Coil	103549	Includes trap
L8	UHF IF Input Trans.	103668	

ITEM No.	USE	REPLACEMENT DATA RCA Victor PART No.	Meissner PART No.	Merit PART No.	Miller PART No.	Ram PART No.	NOTES
L9	RF Choke	102894					
L10	47.25MC Trap	102650					
L11	1st. Video IF	102649					
L12	Fil. Choke						
L13	2nd. Video IF	101588					
L14	Fil. Choke						
L15	3rd. Video IF	101588					
L16	4th. Video IF	101588					
L17	Series Peaking Coil	102639	19-1006	TV-192	6152		18 Microhenries
L18	Series Peaking Coil	102639	19-1006	TV-192	6152		18 Microhenries
L19	Series Peaking Coil	101287	19-3250	TV-185	6181	VP-6	250 Microhenries
L20	Series Peaking Coil	102696	19-3180 *	TV-184 *	6180 *	VP-5 *	180 Microhenries, wound on 27K resistor
L21	Shunt Peaking Coil	101289	19-3300 ▲	TV-199 ▲	6155 ▲		300 Microhenries, wound on 680Ω resistor
L22	Series Peaking Coil	102698	19-3125 ♦	TV-195 ♦	6153♦	VP-4 ♦	120 Microhenries, wound on 6800Ω resistor
L23	Shunt Peaking Coil	102698	19-3125 ♦	TV-195 ♦	6153♦	VP-4 ♦	120 Microhenries, wound on 6800Ω resistor
L24	4.5MC Trap	102518	20-1005 ‡				
L25	Sound IF	102645					Includes cap.
L26	Ratio Det.	102644					Includes cap.
L27	RF Choke	76640	19-1001	BC-562	4604		1.5 Microhenries, IRC part #CL-1

* Parallel with 27K resistor.
▲ Parallel with 680Ω resistor.
♦ Parallel with 6800Ω resistor.
‡ Remove 10mmf cap.

TRANSFORMER (HORIZ. OSC.)

ITEM No.	DC RES. PRI.	DC RES. SEC.	REPLACEMENT DATA RCA Victor PART No.	Meissner PART No.	Merit PART No.	Miller PART No.	Ram PART No.	Thordarson PART No.	NOTES
L28	71Ω *		104087					HS-7	Horiz. Freq. 64 Millihenries * Tapped @ 50Ω
L29	36Ω		100300						Horiz. Waveform

FILTER CHOKE

ITEM No.	RATINGS TOTAL DIRECT CURRENT	RATINGS D. C. RESISTANCE	RATINGS INDUCTANCE (0 CURRENT 1000 ∿)	REPLACEMENT DATA RCA Victor PART No.	Halldorson PART No.	Merit PART No.	Stancor PART No.	Thordarson PART No.	Triad PART No.
L30	.300A	40Ω	1.2 Hy.	77676	C5037 ①	C-2996 ①	C-2326 ①	26C44	C-23X

① Drill new mounting hole.

FUSES

ITEM No.	TYPE	RATING	REPLACEMENT DATA RCA Victor PART No. FUSE	RCA Victor HOLDER	LITTELFUSE PART No. FUSE	LITTELFUSE HOLDER	BUSS PART No. FUSE	BUSS HOLDER
M1	C	3/10A 250V	102164	102162	332.300 (C 3/10A-250V)	346001	C 3/10	HC 0 to 3/10

CRYSTAL DIODES

ITEM No.	ORIG. TYPE	REPLACEMENT DATA RCA Victor PART No.	CBS PART No.	SYLVANIA PART No.	NOTES
M2	1N82 *	104001	1N82A	1N82A	UHF Mixer (Clip-in)
M3	1N60	79985	1N60	1N60	Video Detector (Pigtail)

* Some versions may use a K3D in this application.

MISCELLANEOUS

ITEM No.	PART NAME	RCA Victor PART No.	NOTES
M4	Pilot Lamp		VHF Indicator (#1847)
M5	Pilot Lamp		UHF Indicator (#1847)
M6	Pilot Lamp		Control Panel (#47)
M7	Tuner	KRK47E	VHF - Part of tuner assemblies KRK62N, KRK62R used in Ch. KCS108F, KCS108D
	Tuner	KRK46E	VHF - Part of tuner assemblies KRK62M, KRK62P, KRK62AD used in Ch. KCS108C, KCS108E, KCS108H
	Tuner	KRK46M	VHF - Part of tuner assembly KRK62AB - Used in Ch. KCS108E with 24" picture tube
	Tuner	KRF47M	VHF - Part of tuner assembly KRK62AC - used in Ch. KCS108F with 24" picture tube
M8	Tuner	KRK64A	UHF - Part of tuner assemblies KRK62N, KRK62R, KRK62AC - used in Ch. KCS108D, KCS108F
M9	Switch	102686	TV-Phono (Slide type TPDT)
M10	Switch	104920	UHF Pilot Lamp
M11	Centering Device	104077	Includes yoke cover
	Printed Circuit	104314	Sound Circuit Assembly - less tubes
	Printed Circuit	102892	Video IF Circuit Assembly - less tubes
	Printed Circuit	102586	Video Circuit Assembly - less tubes
	Printed Circuit	104312	Vert. Circuit Assembly - less tubes
	Printed Circuit	104313	Horiz. Osc. Circuit Assy. - less tubes

PARTS LIST AND DESCRIPTIONS (Continued)

CABINETS & CABINET PARTS

(When Ordering Cabinets & Cabinet Parts, Specify Model, Chassis & Color)

NAME	PART NO.	DESCRIPTION
Safety Glass	104252	Models 21-D-8525, U, 26, U, 27, U, 28, U, 45, U, 46, U, 47, U, 65, U, 66, U, 67, U
Safety Glass	102742	Models 21-D-8588, U, 21-D-8605, U, 07, U, 08, U
Safety Glass	105495	Models 24-D-8655, U, 57, U, 76, U, 78, U
Mask	104247	Models 21-D-8525, U, 26, U, 27, U, 28, U, 45, U, 46, U, 47, U, 65, U, 66, U, 67, U
Mask	104407	Models 21-D-8588, U, 21-D-8605, U, 07, U, 08, U
Bezel	104549	
Escutcheon	104418	Channel Indicator Dial
Knob	104403	VHF Channel Selector - Models 21-D-8526, U, 27, U, 46, U, 47, U, 66, U, 67, U, 21-D-8607, U, 24-D-8657, U, 76, U
Knob	104402	VHF Channel Selector - Models 21-D-8525, U, 45, U, 65, U, 21-D-8605, U, 24-D-8655, U
Knob	104404	VHF Channel Selector - Models 21-D-8528, U, 88, U, 21-D-8608, U, 24-D-8678, U
Knob	104398	UHF/VHF Fine Tuning - Models 21-D-8526, U, 27, U, 46, U, 47, U, 66, U, 67, U, 21-D-8607, U, 24-D-8657, U, 76, U
Knob	104397	UHF/VHF Fine tuning- Models 21-D-8525, U, 45, U, 65, U, 21-D-8605, U, 24-D-8655U
Knob	104399	UHF/VHF Fine Tuning - Models 21-D-8528, U, 88, U, 21-D-8608, U, 24-D-8678, U
Knob	104072	UHF Tuning - Models 21-D-8526U, 27U, 46U, 47U, 66U, 67U, 21-D-8607U, 24-D-8657U, 76U
Knob	104071	UHF Tuning - Models 21-D-8525U, 45U, 65U, 21-D-8605U, 24-D-8655U
Knob	104405	UHF Tuning - Models 21-D-8528U, 88U, 21-D-8608U, 24-D-8678U
Knob	100621-B	On-off-volume - Models 21-D-8526, U, 27, U, 46, U, 47, U, 66, U, 67, U, 21-D-8607, U, 24-D-8657, U, 76, U
Knob	101138-B	On-off-volume - Models 21-D-8525, U, 45, U, 65, U, 21-D-8605, U, 24-D-8655, U
Knob	101140-B	On-off-volume - Models 21-D-8528, U, 88, U, 21-D-8608, U, 24-D-8678, U
Knob	104395	Contrast - Models 21-D-8526, U, 27, U, 45, U, 47, U, 66, U, 67, U, 21-D-8607, U, 24-D-8657, U, 76, U
Knob	104386	Contrast - Models 21-D-8525, U, 45, U, 65, U, 21-D-8605, U, 24-D-8655, U
Knob	104396	Contrast - Models 21-D-8528, U, 88, U, 21-D-8608, U, 24-D-8678, U
Knob	102581	Brightness, Vert. Hold, Horiz. Hold, Tone
Dial	104521	UHF - Models 21-D-8526U, 27U, 28U, 46U, 47U, 66U, 67U, 88U, 21-D-8607U, 08U, 24-D-8657U, 76U, 78U
Dial	104074	UHF - Models 21-D-8525U, 45U, 65U, 21-D-8605U
Dial	104520	UHF - Models 21-D-8525U, 45U, 65U, 21-D-8605U, 24-D-8655U
Dial	104417	UHF Channel Indicator - Models 21-D-8545U, 46U, 47U, 65U, 66U, 67U, 24-D-8676U, 78U
Dial	104585	UHF Channel Indicator - Models 21-D-8525U, 26U, 27U, 28U, 88U, 8605U, 07U, 08U, 24-D-8655U, 57U
Dial	104584	VHF Channel Indicator - Models 21-D-8525, 26, 27, 28, 88, 21-D-8605, 07, 08, 24-D-8655, 57
Dial	104416	VHF Channel Indicator - Models 21-D-8545, 46, 47, 65, 66, 67, 24-D-8676, 78
Belt	104412	Tuning Dial - Models 21-D-8565, U, 66, U, 67, U
Belt	105349	Tuning Dial - Models 21-D-8525, U, 26, U, 27, U, 28, U
Belt	104410	Tuning Dial - Models 21-D-8588, U, 21-D-8605, U, 07, U, 08, U
Cabinet	M4159	Models 21-D-8566, U
Cabinet	M4155	Models 21-D-8525, U
Cabinet	M4156	Models 21-D-8526, U
Cabinet	M4157	Models 21-D-8527, U
Cabinet	M4194	Models 21-D-8528, U
Cabinet	M4165	Models 21-D-8545, U
Cabinet	M4166	Models 21-D-8546, U
Cabinet	M4167	Models 21-D-8547, U
Cabinet	M4158	Models 21-D-8565, U
Cabinet	M4160	Models 21-D-8567, U
Cabinet	X4161	Models 21-D-8588, U
Cabinet	X4162	Models 21-D-8605, U
Cabinet	X4163	Models 21-D-8607, U
Cabinet	X4164	Models 21-D-8608, U
Cabinet	M4278	Models 24-D-8655, U
Cabinet	M4279	Models 24-D-8657, U
Cabinet	X4280	Models 24-D-8676, U
Cabinet	X4281	Models 24-D-8678, U

WIRING DATA

High Voltage Lead	Use BELDEN No. 8869
Shielded Hook-up Wire	Use BELDEN No. 8885 (Single Conductor) 8738 (Two Conductor)
General-use Unshielded Hook-up Wire	Use BELDEN No. 8530 (Solid) Available in Ten Colors 8524 (Stranded) Available in Ten Colors
Power Cord (Interlock Type)	Use BELDEN No. 8874
300Ω Tuner Input Lead	Use BELDEN No. 8225
300Ω Antenna Lead-in	Use BELDEN No. 8230 or 8275
Antenna Rotor Cable	Use BELDEN No. 8464 (Flat) or 8484 (Round) - 4 Conductor 8485 (Round) - 5 Conductor 8488 (Round) - 8 Conductor

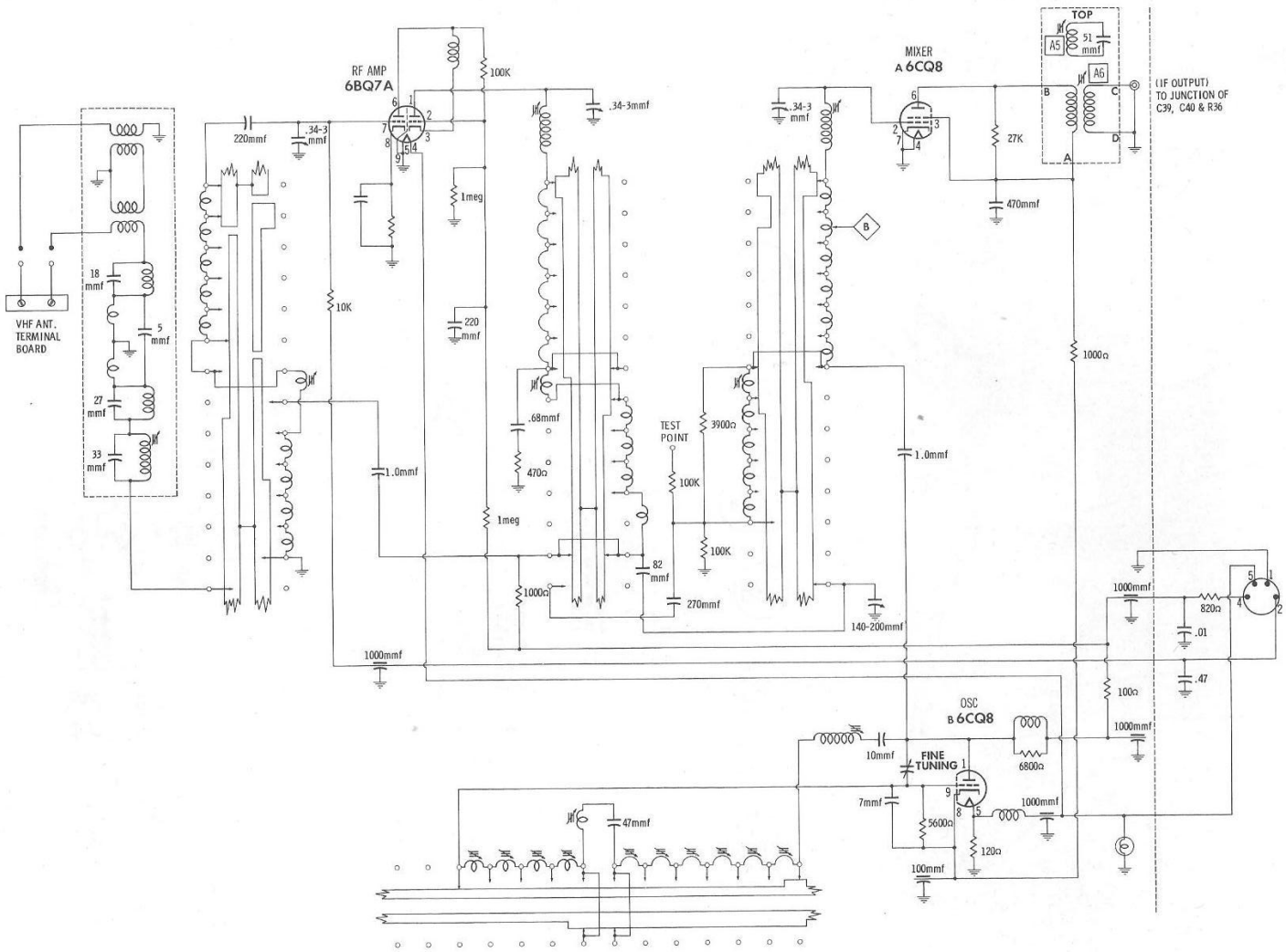

CHANNEL SELECTOR SWITCH SHOWN IN CHANNEL 13 POSITION

VHF TUNER PART #KRK46-E

A PHOTOFACT STANDARD NOTATION SCHEMATIC
Howard W. Sams & Co., Inc. 1958

ALTERNATE TUNER SCHEMATIC

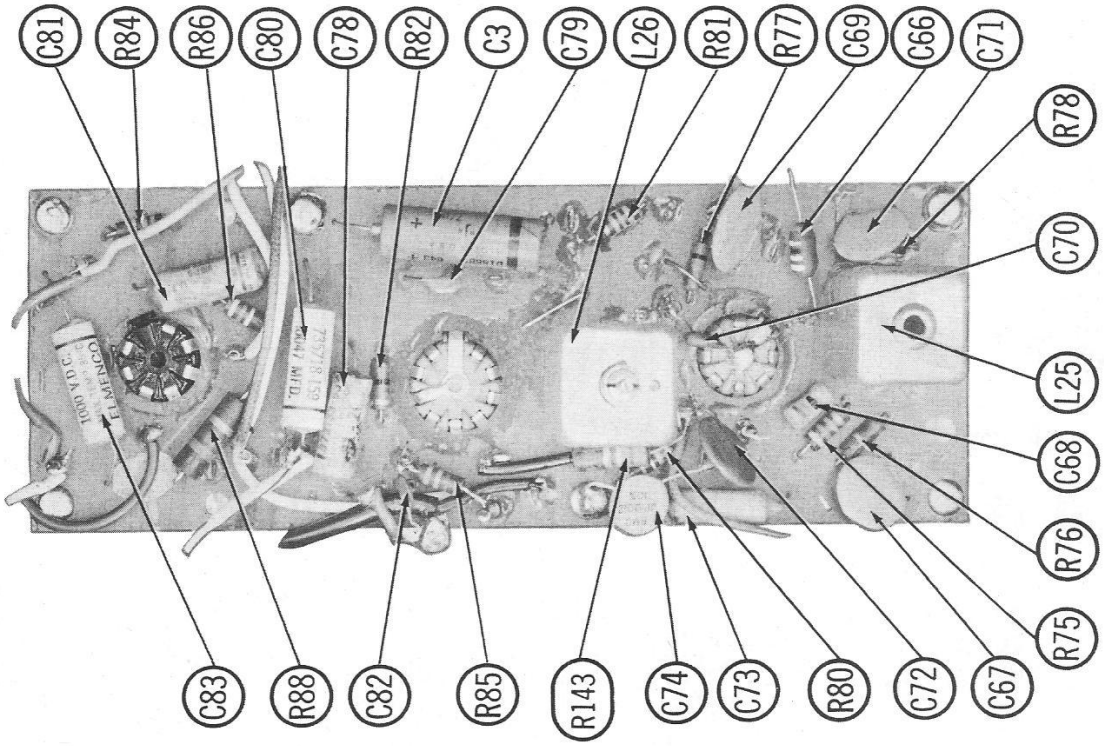

SOUND PRINTED BOARD

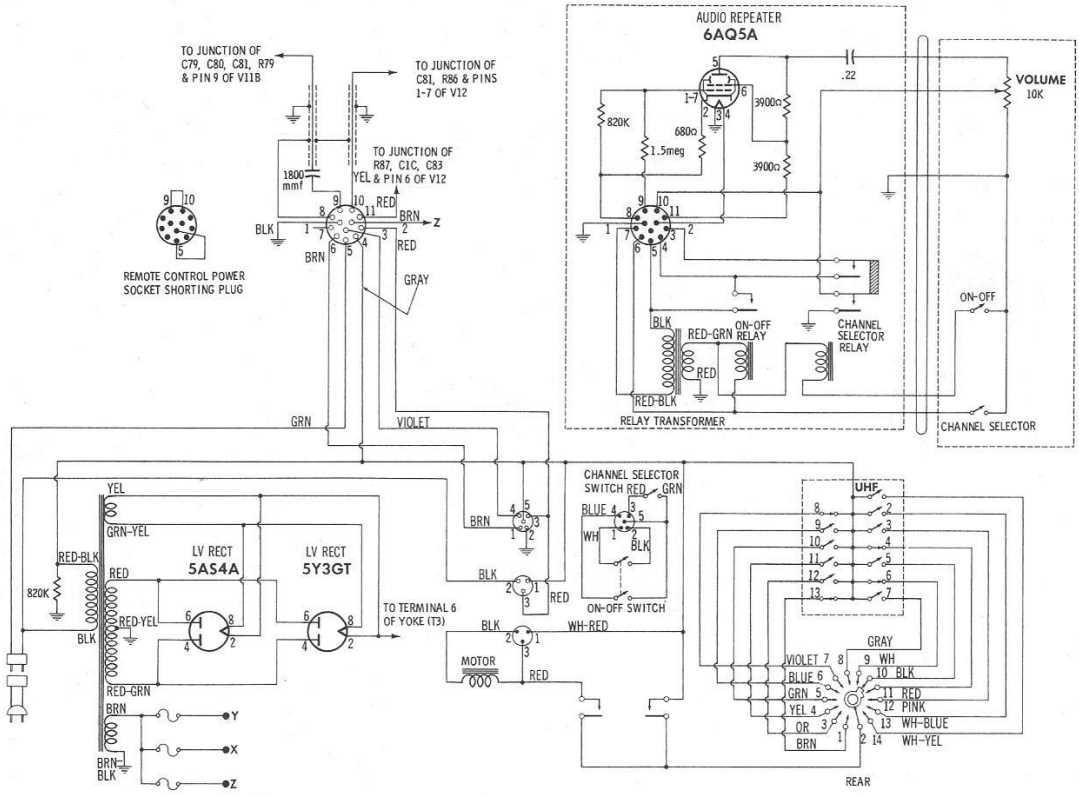

A PHOTOFACT STANDARD NOTATION SCHEMATIC
Howard W. Sams & Co., Inc. 1958

ALTERNATE REMOTE TUNING & POWER SUPPLY SCHEMATICS

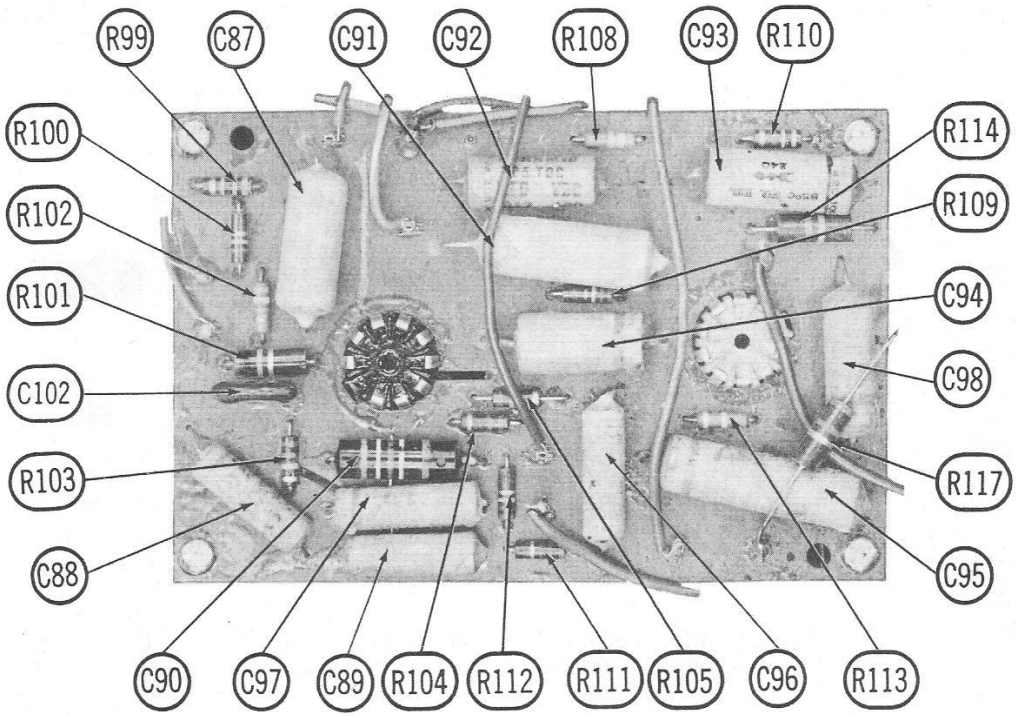

VERTICAL PRINTED BOARD

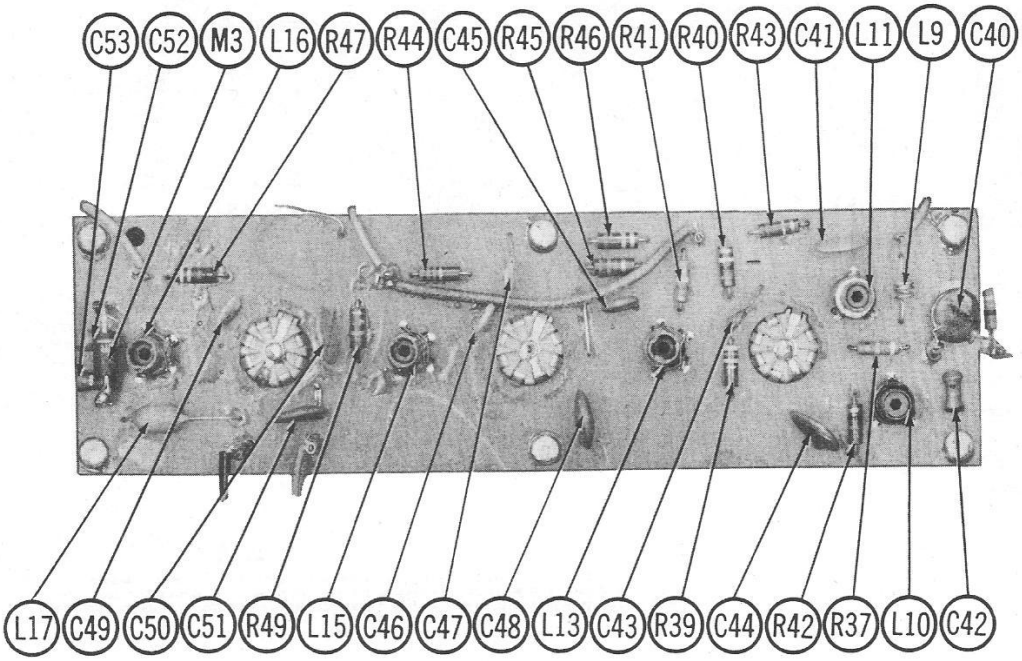

VIDEO IF—PRINTED BOARD

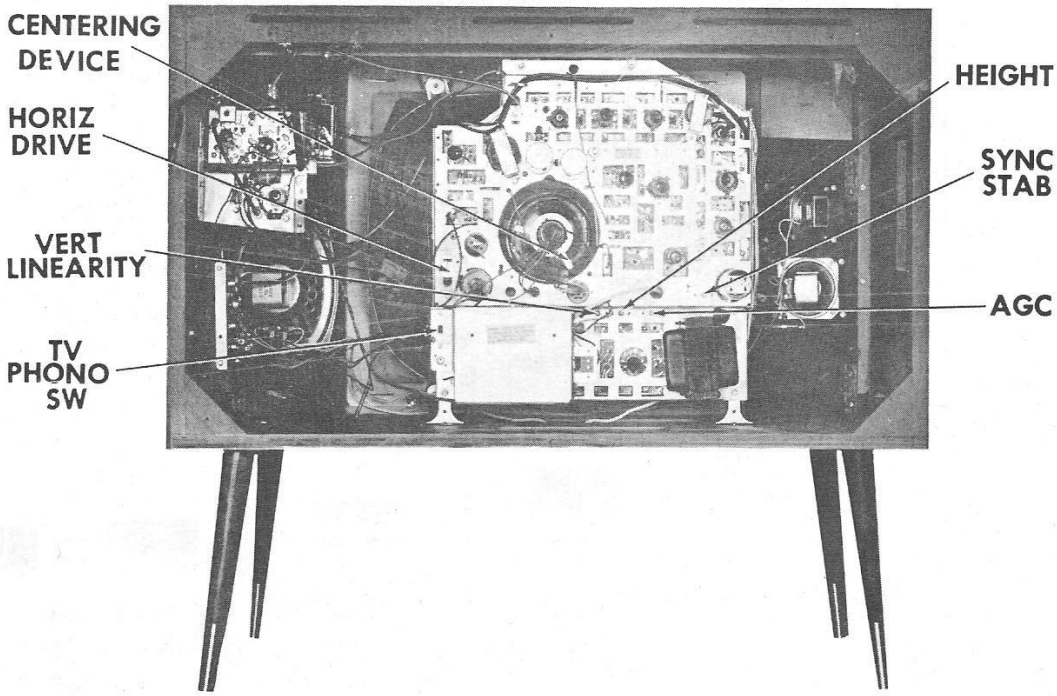

CABINET—REAR VIEW

HORIZONTAL SWEEP CIRCUIT ADJUSTMENTS

Connect a short clip lead across the horizontal waveform coil (L29) and adjust the horizontal hold control until the picture pulls into sync. Remove the clip lead.

Connect the vertical amplifier of a scope thru a low capacity probe to point Ⓗ. Low side to chassis. Turn the horizontal hold control clockwise until the picture falls out of sync, then counter clockwise until the picture just pulls into sync. Adjust the horizontal waveform slug (B1) until the waveform on the scope appears similar to that shown in Fig. 5 with peaks of equal amplitudes. If necessary, during this adjustment, keep the picture in sync with the horizontal hold control. Remove the scope connections.

Turn the horizontal hold control until the picture falls out of sync with the diagonal lines sloping down to the left. Slowly turn the control counter clockwise and note the number of diagonal bars obtained just before the picture falls into sync. Pull-in should occur with one and one-half to three bars present. Set the width slug (B3) fully counter clockwise.

With the horizontal hold control set at the pull-in point, adjust the horizontal drive trimmer (B2) counter clockwise until a bright vertical line in the center of the picture appears. Turn B2 clockwise until the drive line disappears. If no drive line appears, set B2 fully counter clockwise.

Set the brightness and contrast controls to normal and adjust the width slug (B3) for a picture SLIGHTLY wider than necessary to fill the picture mask horizontally.

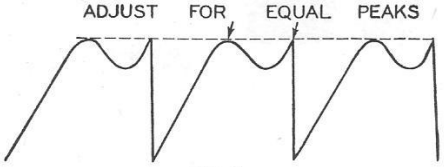

FIG. 5