PHOTOFACT® Folder with CIRCUITRACE*

RCA VICTOR CHASSIS KCS137A, KCS137B, KCS137P, KRS25A, KRT3A

IMPORTANT FILING NOTICE

The TV Folder for this envelope will be found among the first folders in this complete Set of folders.

Merely insert the corresponding folder on this model in this envelope to retain proper filing and indexing order.

RCA VICTOR CHASSIS KCS137A, KCS137B, KCS137P, KRS25A, KRT3A

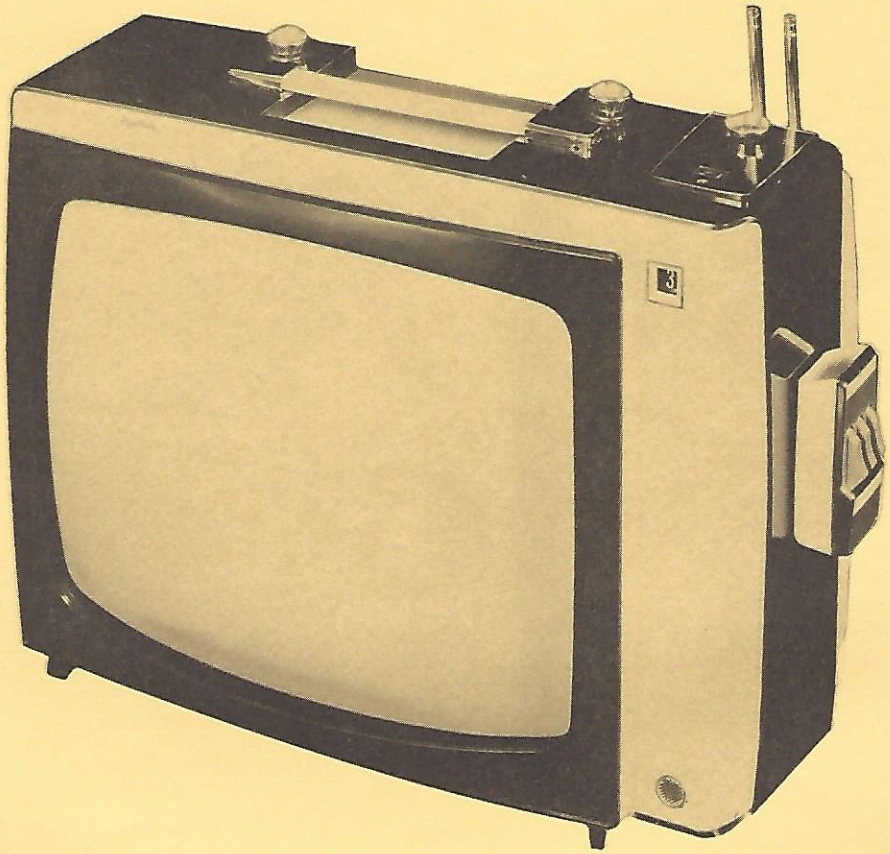

MODEL 192A072RS

RCA VICTOR CHASSIS KCS137A, KCS137B, KCS137P, KRS25A, KRT3A

SET 559 FOLDER 2

HOWARD W. SAMS & CO., INC. Indianapolis 6, Indiana

The listing of any available replacement part herein does not constitute in any case a recommendation, warranty or guaranty by Howard W. Sams & Co., Inc., as to the quality and suitability of such replacement part. The numbers of these parts have been compiled from information furnished to Howard W. Sams & Co., Inc., by the manufacturers of the particular type of replacement part listed. Reproduction or use, without express permission, of editorial or pictorial content, in any manner, is prohibited. No patent liability is assumed with respect to the use of the information contained herein. © 1961 Howard W. Sams & Co., Inc., Indianapolis 6, Indiana. Printed in U.S. of America

PHOTOFACT® Folder with CIRCUITRACE*

RCA VICTOR CHASSIS KCS137A, KCS137B, KCS137P, KRS25A, KRT3A

RCA VICTOR CHASSIS KCS137A, KCS137B, KCS137P, KRS25A, KRT3A

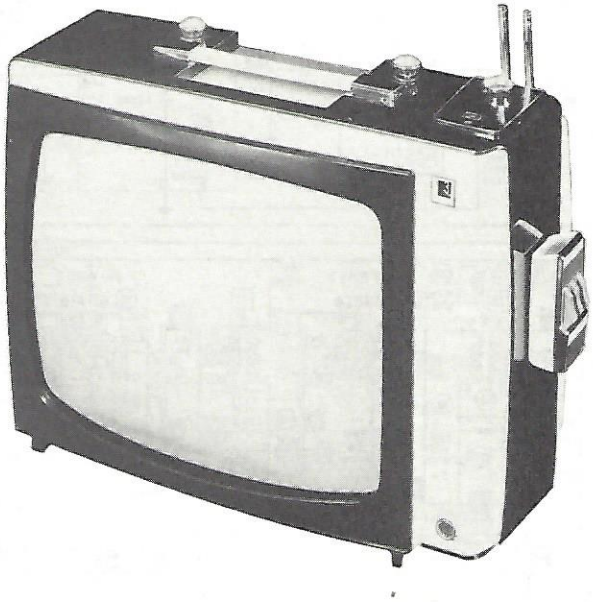

MODEL 192A072RS

CAUTION

ONE SIDE OF AC LINE CONNECTED TO CHASSIS.

TRADE NAME	RCA Victor Models	TV Chassis	Remote Control Receiver, Transmitter	VHF Tuner	UHF Tuner
	192A072MU, 192A075MU, 192A078MU, 192A079MU	KCS137B		KRK104B	KRK66AJ
	192A072MV, 192A075MV, 192A078MV, 192A079MV	KCS137A		KRK103B	
	192A072RS, 192A079RS	KCS137P	KRS25A, KRT3A	KRK102L	

MANUFACTURER: Radio Corporation of America, RCA Victor Home Instruments Division, Indianapolis 1, Indiana
TYPE SET: Television Receiver (Models with Chassis KCS137P use Remote Control)
TUBES: TV: VHF - Sixteen, UHF - Seventeen Remote Control Receiver: Four Tubes, 1 Transistor
POWER SUPPLY: 110-120 Volts AC, 60 Cycle RATING TV with Remote: 160 Watts, 1.5 Amp. @ 117 Volts AC (175 Watts, 1.7 Amp. While Tuning)
TUNING RANGE: Channels 2 thru 13 VHF, 14 thru 83 UHF, Video IF 45.75MC, Sound IF 41.25MC (Intercarrier)

SERVICING IN THE FIELD

SAFETY GLASS REMOVAL

For picture tube and safety glass cleaning, it is necessary to remove the chassis. (See "Disassembly Instructions".)

FUSE

A .4 Amp. fuse is used for low voltage power supply protection. (For location, see "Tube Placement Chart".)

TUNER OSCILLATOR ADJUSTMENTS

Remote Control Models: To touch up VHF Oscillator, remove Touch Channel Selector knob and escutcheon.
Models Without Remote Control:
Remove Channel Selector knob (also Fine Tuning in some versions) to touch up VHF Oscillator.

AGC

The AGC may be varied by means of an AGC Control. (For location, see "Tube Placement Chart".)

FOCUS

No provision is made to vary the focus on this receiver.

SYNC STABILITY

Sync stability may be varied by means of a Sync Stability Control. (For location, see "Tube Placement Chart".)

HORIZONTAL OSCILLATOR FIELD ADJUSTMENT

Coarse adjustment of the Horizontal Hold is accomplished by the proper setting of the Horizontal Stabilizing Coil Slug. (For location, see "Tube Placement Chart".)

WIDTH

The width may be varied by a Width Coil Slug. (See "Tube Placement Chart" for location.)

CENTERING

Centering is accomplished by 2 magnetic rings, located behind the yoke, on the neck of the picture tube.

HOWARD W. SAMS & CO., INC. Indianapolis 6, Indiana

The listing of any available replacement part herein does not constitute in any case a recommendation, warranty or guaranty by Howard W. Sams & Co., Inc., as to the quality and suitability of such replacement part. The numbers of these parts have been compiled from information furnished to Howard W. Sams & Co., Inc., by the manufacturers of LA215 the particular type of replacement part listed. Reproduction or use, without express permission, of editorial or pictorial content, in any manner, is prohibited. No patent liability is assumed with respect to the use of the information contained herein. © 1961 Howard W. Sams & Co., Inc., Indianapolis 6, Indiana. Printed in U.S. of America

SET 559 FOLDER 2

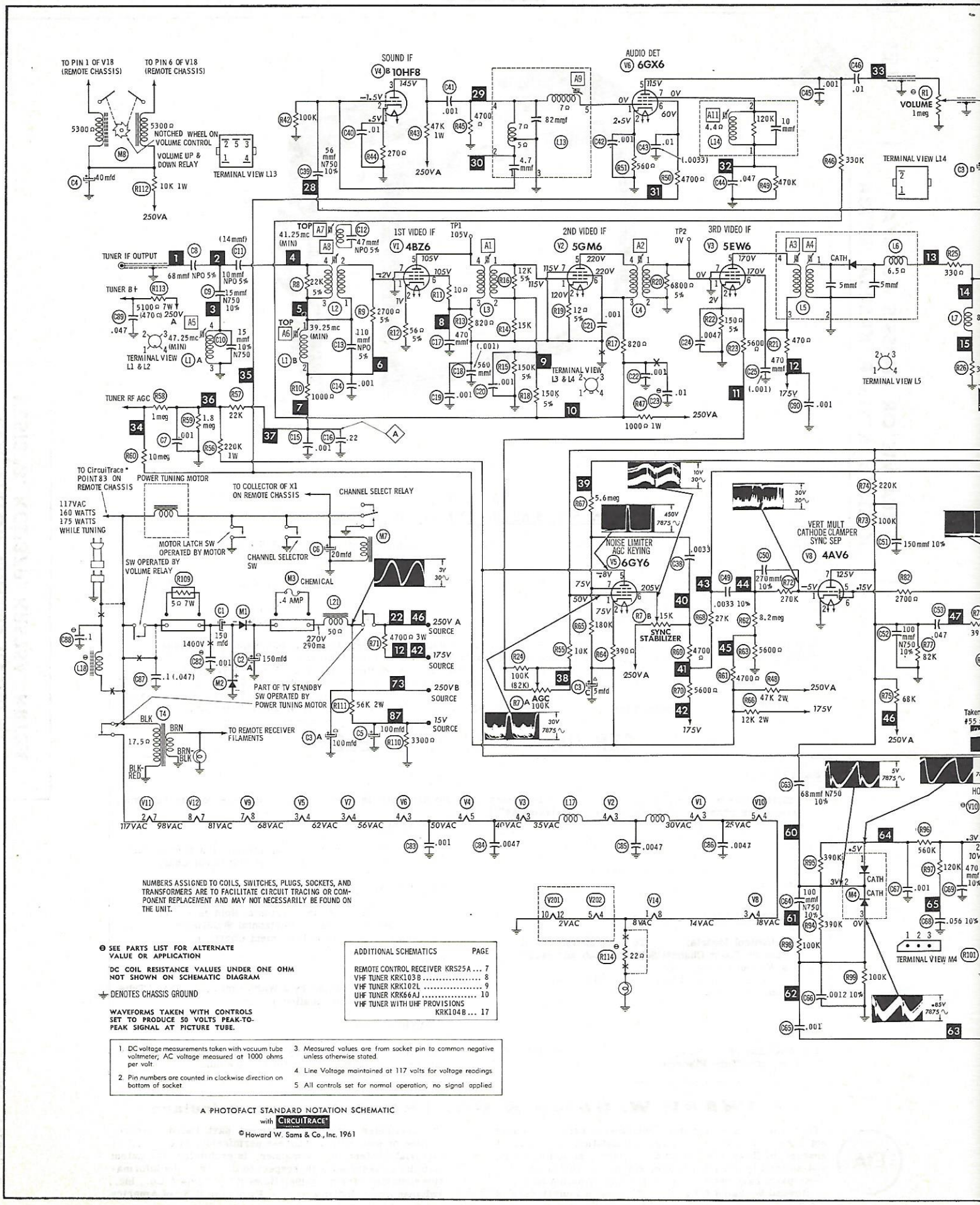

NUMBERS ASSIGNED TO COILS, SWITCHES, PLUGS, SOCKETS, AND TRANSFORMERS ARE TO FACILITATE CIRCUIT TRACING OR COMPONENT REPLACEMENT AND MAY NOT NECESSARILY BE FOUND ON THE UNIT.

⊖ SEE PARTS LIST FOR ALTERNATE VALUE OR APPLICATION

DC COIL RESISTANCE VALUES UNDER ONE OHM NOT SHOWN ON SCHEMATIC DIAGRAM

⏚ DENOTES CHASSIS GROUND

WAVEFORMS TAKEN WITH CONTROLS SET TO PRODUCE 50 VOLTS PEAK-TO-PEAK SIGNAL AT PICTURE TUBE.

ADDITIONAL SCHEMATICS	PAGE
REMOTE CONTROL RECEIVER KRS25A	7
VHF TUNER KRK103B	8
VHF TUNER KRK102L	9
UHF TUNER KRK66AJ	10
VHF TUNER WITH UHF PROVISIONS KRK104B	17

1. DC voltage measurements taken with vacuum tube voltmeter; AC voltage measured at 1000 ohms per volt
2. Pin numbers are counted in clockwise direction on bottom of socket
3. Measured values are from socket pin to common negative unless otherwise stated.
4. Line Voltage maintained at 117 volts for voltage readings
5. All controls set for normal operation, no signal applied

A PHOTOFACT STANDARD NOTATION SCHEMATIC with CIRCUITRACE*

©Howard W. Sams & Co., Inc. 1961

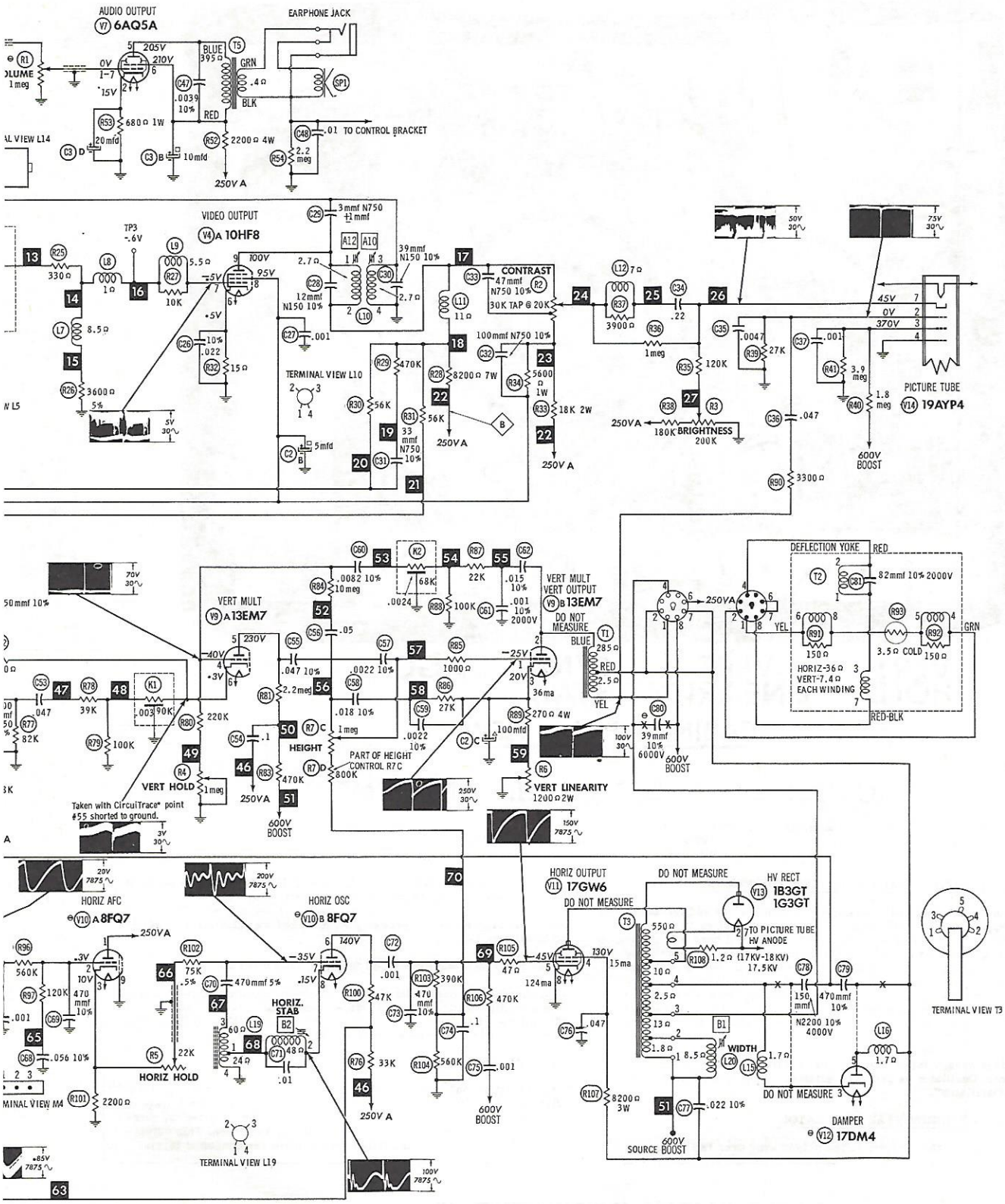

RCA VICTOR CHASSIS KCS137A, KCS137B, KCS137P, KRS25A, KRT3A

TUBE PLACEMENT CHART

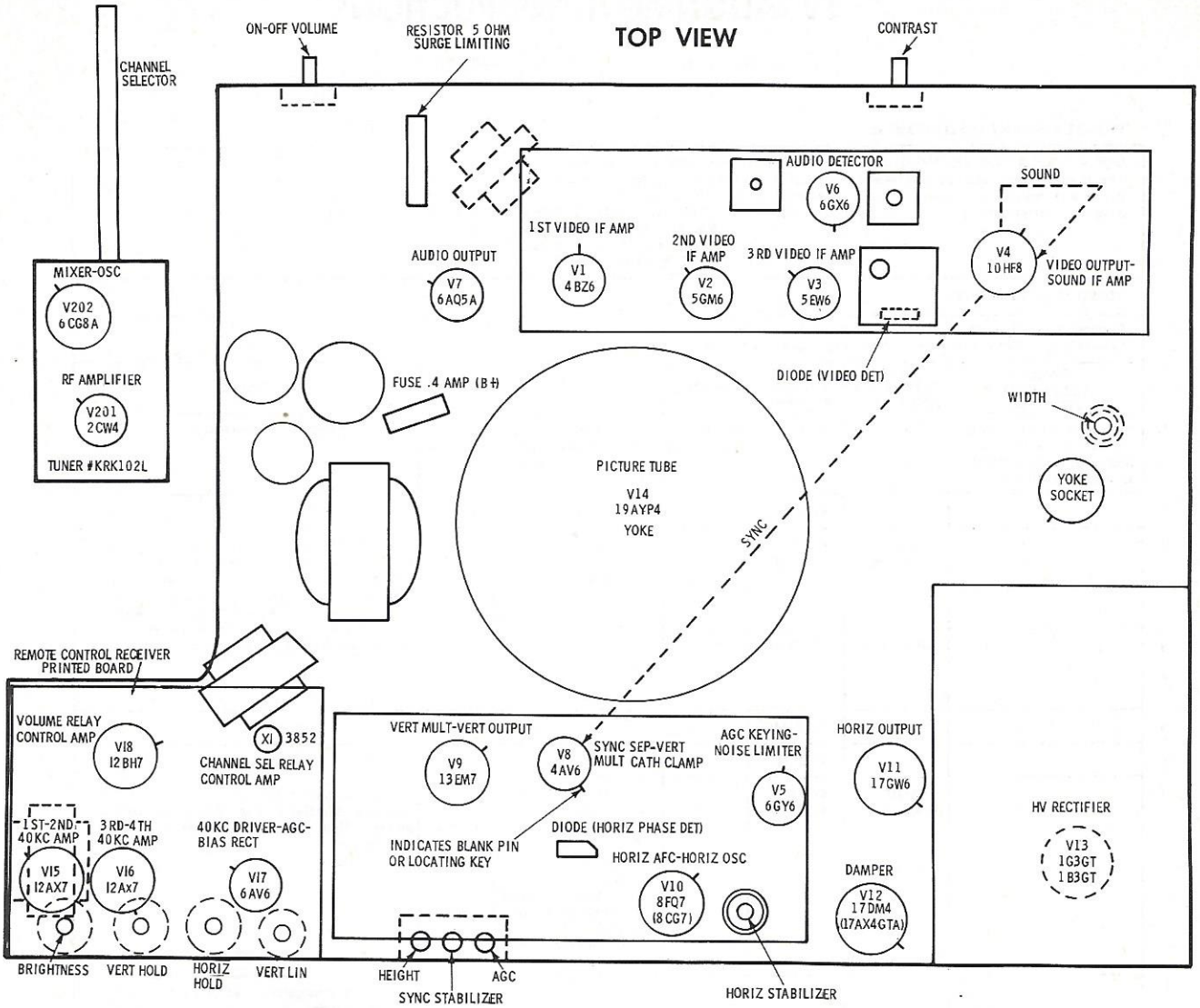

TUBE FAILURE CHECK CHART

The following chart lists tubes whose failures are most likely to produce indicated symptoms. Refer to tube placement chart for location and type of tube.

POWER SUPPLY FAILURE
No raster, no sound — Resistor, Fuse (B+), Rectifiers M1, M2 (Surge Limiting)

SWEEP FAILURE
No raster, has sound V10, V11, V12, V13, V14
No vertical deflection V9
Poor vert. linearity or foldover V9
Poor horiz. linearity or foldover V10, V11, V12
Narrow picture V10, V11, V12, M1, M2
Vert. off freq. V9
Horiz. off freq. Diode (Horiz. Phase Det.), V10

LOSS OF PICTURE OR SOUND
No pic, no sound, has raster V1, V2, V3, Diode (Video Det.), V4
No pic, no sound, has snow V201, V202, V1
No pic, has sound, has raster V4, V14
Has pic, no sound V4, V6, V7
Overloaded picture V5

SYNC FAILURE
No vert. sync V8
No horiz. sync V8
No vert. or horiz. sync V8

This receiver employs tubes used in a series filament network, an open filament in any tube will cause the set to be inoperative. (See circuit below.)

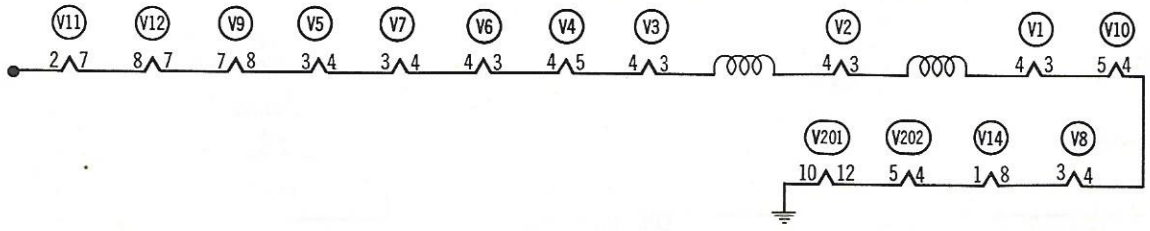

TV ALIGNMENT INSTRUCTIONS

ALIGNMENT IDENTIFICATION PHOTO PAGE 20

PRE-ALIGNMENT INSTRUCTIONS

USE AN ISOLATION TRANSFORMER TO PROTECT THE TEST EQUIPMENT.
The High Voltage Lead should be securely taped and kept away from the chassis.
Allow a 20 minute warm-up period for the receiver and test equipment.
Suggested Alignment Tools: A1 thru A11, A13 ..... GENERAL CEMENT #8282, 8606, 8606L, 9295, 9440
WALSCO #2526, 2543, 2544, 2545
A12 ..... GENERAL CEMENT #8721, 8722
WALSCO #2519

VIDEO IF ALIGNMENT

Connect a clip lead from point (A) to chassis.
Couple signal generator loosely to sweep cable to provide markers.

	SWEEP GENERATOR COUPLING	SWEEP GENERATOR FREQUENCY	MARKER GENERATOR FREQUENCY	CHANNEL	CONNECT SCOPE	ADJUST	REMARKS
1.	High side thru 1500mmf ceramic capacitor to Mixer Grid Test Point. Low side to chassis.	Not Used	45.5MC	Any non-interfering channel.	Use VTVM DC probe thru 10K to TP-3. Common to chassis.	A1	Adjust for maximum deflection.
2.	"	"	43.0MC	"	"	A2	"
3.	"	45MC (10MC Swp.)	41.25MC 45.75MC	"	Vert. Amp. thru 10K to TP-3. Low side to chassis.	A3, A4	Connect the negative lead of a 3.5 volt bias supply to RF AGC. Positive to chassis. Adjust for maximum gain and symmetry of response similar to Fig. 1 with markers as shown. Use 5 volts peak to peak on scope.
4.	"	Not Used	47.25MC	"	Use VTVM DC probe thru 10K to TP-3. Common to chassis.	A5	Adjust for MINIMUM deflection.
5.	"	"	39.25MC	"	"	A6	"
6.	"	"	41.25MC	"	"	A7	"
7.	"	45MC (10MC Swp.)	42.5MC 45.75MC	"	Connect a .001mfd in series with a 180Ω carbon resistor from TP-1 to chassis with the capacitor connected to TP-1. Vert. Amp. of scope thru diode probe to junction of the resistor and capacitor. Low side to chassis.	Mixer Plate Coil & A8	Adjust for maximum gain and symmetry of response similar to Fig. 2 with markers as shown. Use .5 volts peak to peak on scope. Repeat step 4. Remove capacitor and resistor from TP-1.
8.	"	"	42.5MC 45.0MC 45.75MC	"	Vert. Amp. thru 10K to TP-3. Low side to chassis.	A1, A2, A3, A4	Connect the negative lead of a 6 volt bias supply to point (A). Positive to chassis. Adjust for maximum gain and symmetry of response similar to Fig. 3 with markers as shown. Use 5 volts peak to peak on scope.
9.	Insert pad (Fig. 4) in series with high side of generator. Connect to same point.	"	45.75MC	"	DC probe of VTVM to TP-3. Common to chassis.		Adjust generator output to provide exactly 1.5 volts on VTVM.
10.	"	"	41.25MC	"	"	A2, A3, A4	Retouch for 1.2 to 1.5 volts on VTVM while maintaining response similar to Fig. 3.
11.	Across antenna terminals thru matching network (Fig. 5).	Each VHF channel in turn.	42.5MC 45.0MC 45.75MC	All VHF channels	Vert. Amp. thru 10K to TP-3. Low side to chassis.	A1, A3, A4	Check for response similar to Fig. 3. Retouch SLIGHTLY to correct for tilt or other conditions that are approximately the same on all channels.

CONTINUED PAGE 21

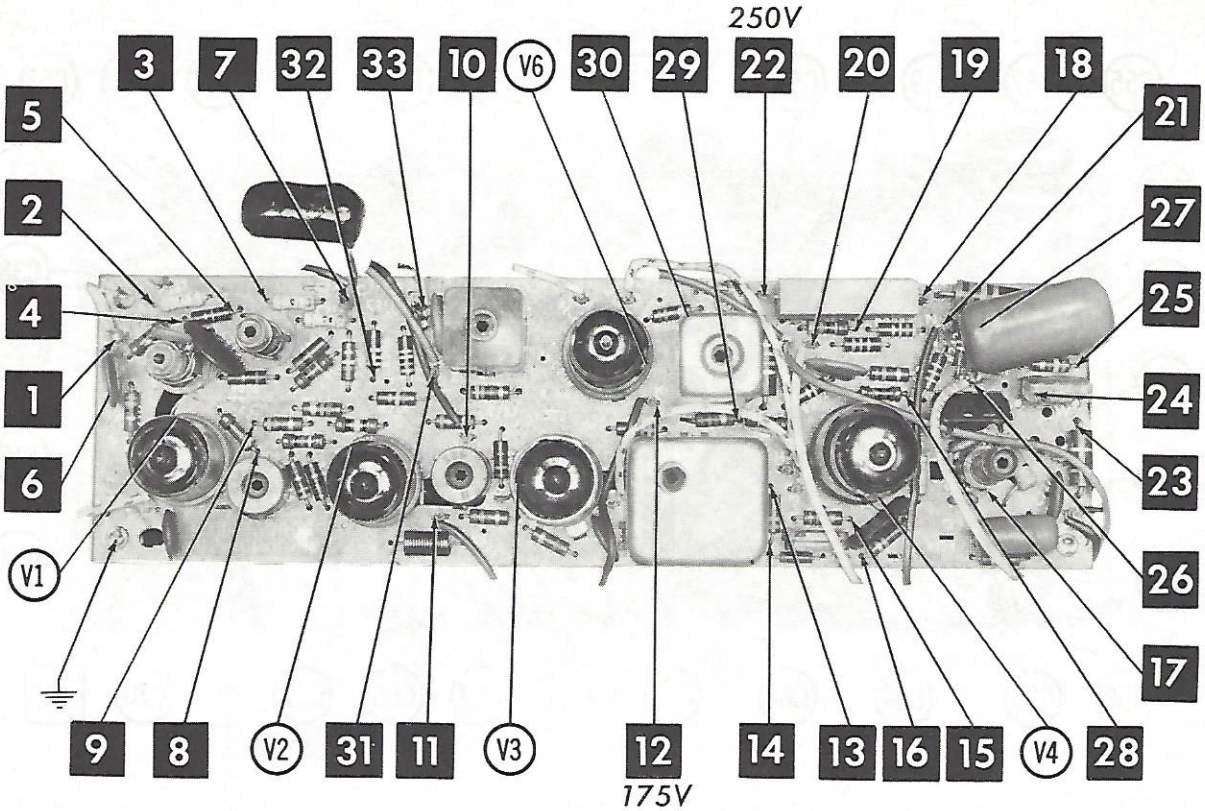

A Howard W. Sams CIRCUITRACE* Photo

ARROWS INDICATING TUBE LOCATIONS ARE POINTING TO PIN 1 UNLESS OTHERWISE INDICATED

VIDEO, SOUND PRINTED BOARD

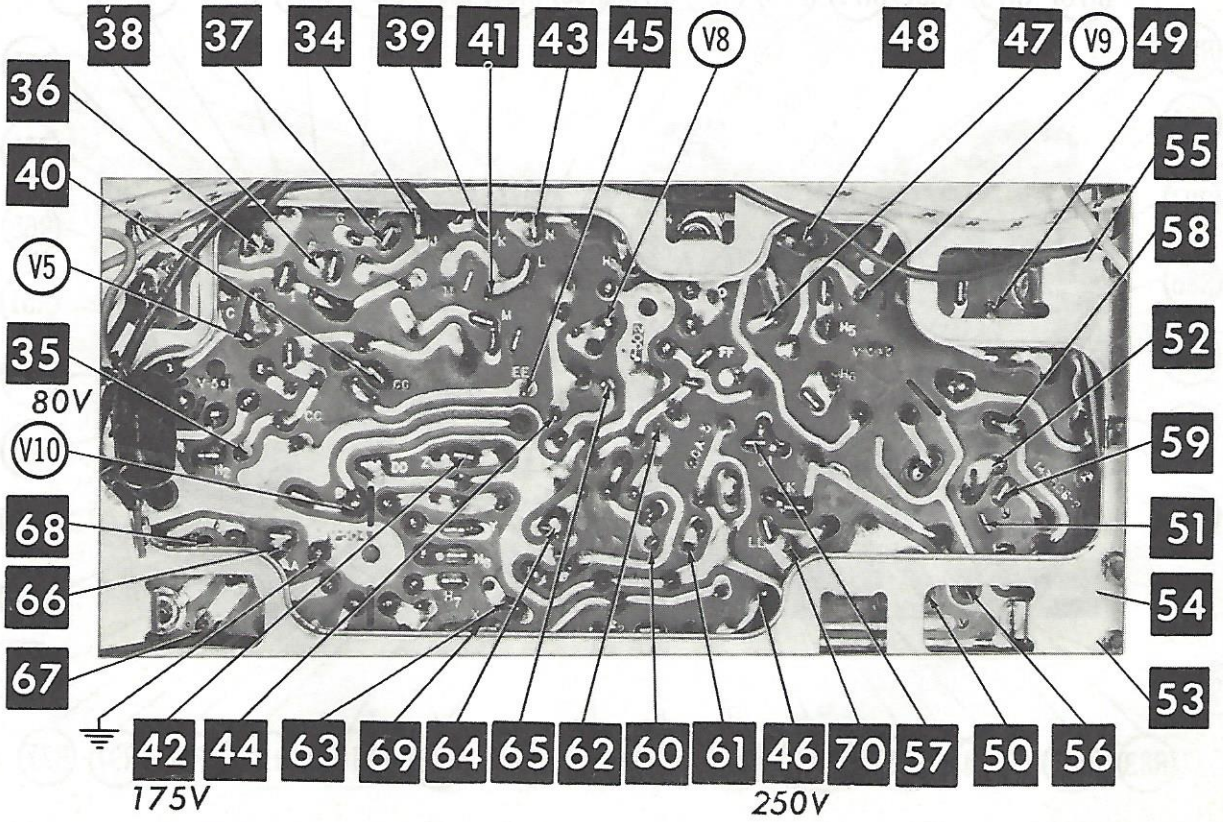

A Howard W. Sams CIRCUITRACE* Photo

ARROWS INDICATING TUBE LOCATIONS ARE POINTING TO PIN 1 UNLESS OTHERWISE INDICATED

SYNC, SWEEP PRINTED BOARD

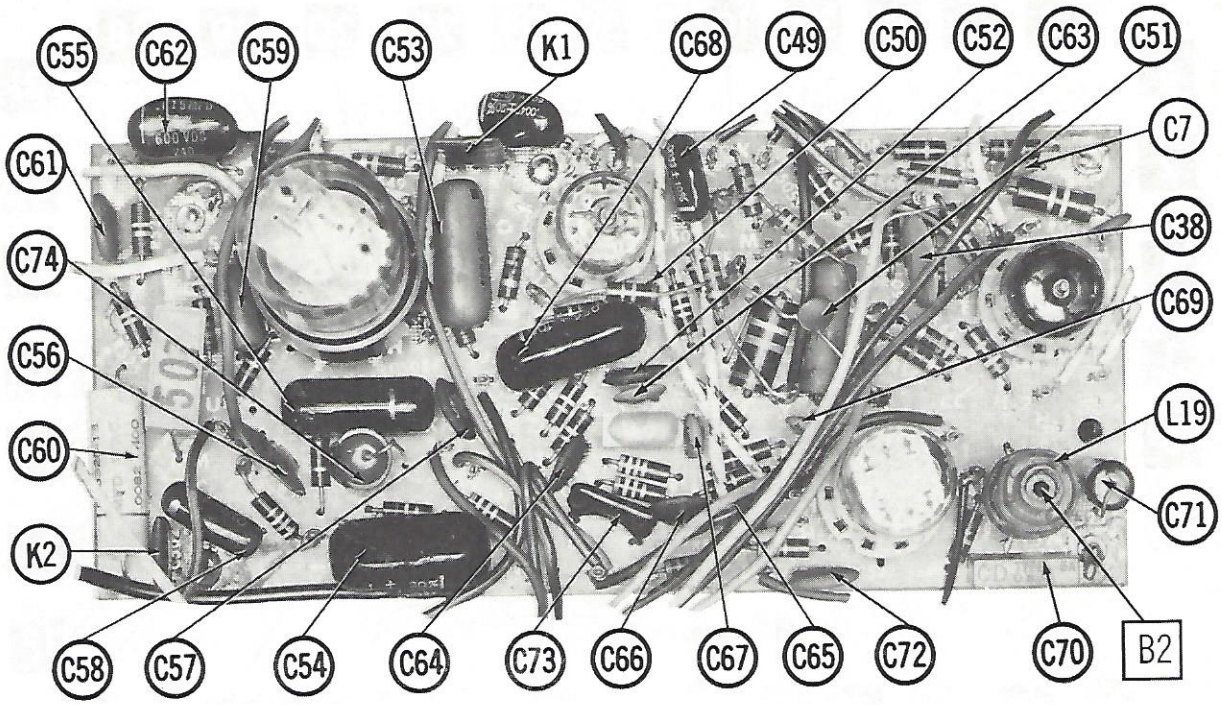

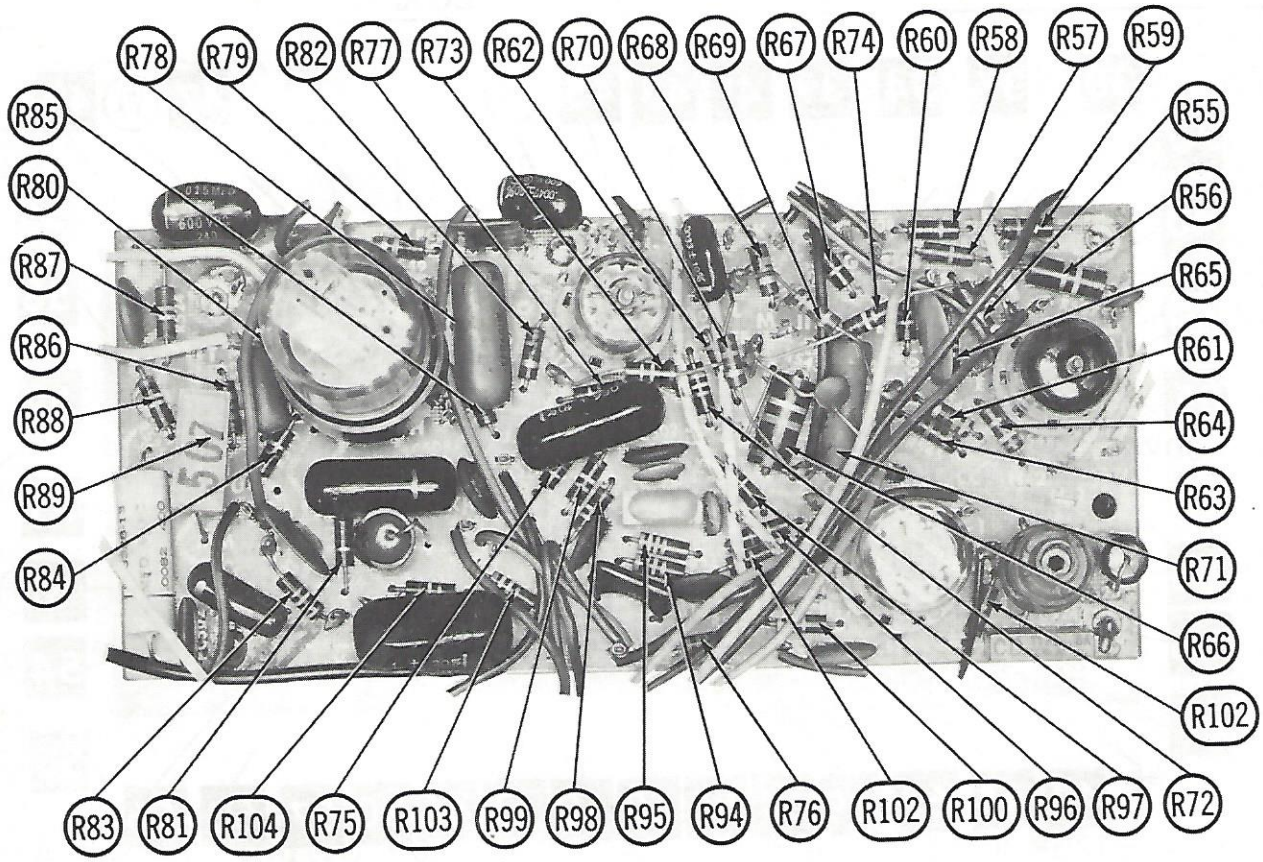

SYNC, SWEEP PRINTED BOARD

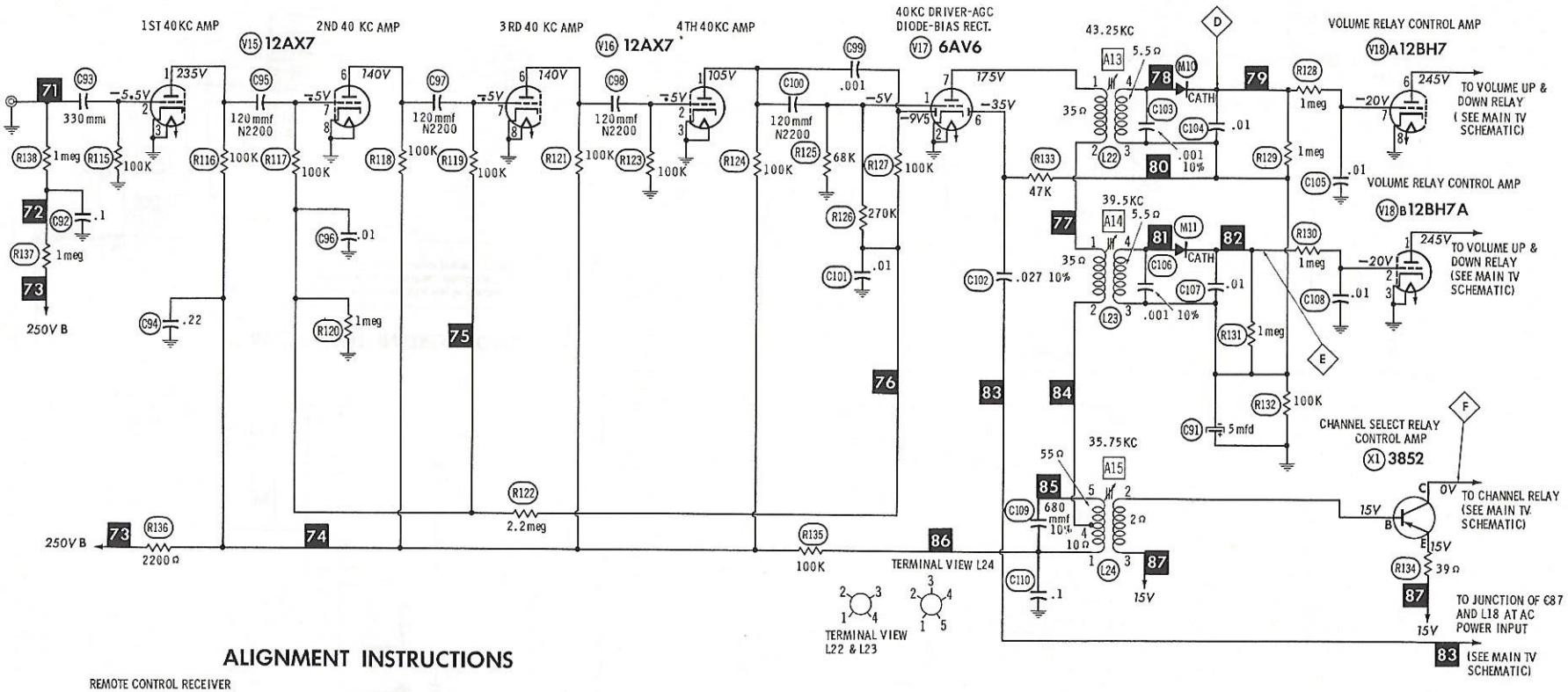

ALIGNMENT INSTRUCTIONS

REMOTE CONTROL RECEIVER

	SIGNAL GENERATOR COUPLING	SIGNAL GENERATOR FREQUENCY	CONNECT VTVM	ADJUST	REMARKS
1.	High side thru 1meg to microphone recept. Low side to chassis.	43.25KC	DC probe to point D. Common to chassis.	A13	Adjust for maximum deflection. Use only enough generator output to provide a usable indication.
2.	"	39.50KC	DC probe to point E. Common to chassis.	A14	"
3.	"	35.75KC	DC probe to point F. Common to chassis.	A15	"

A PHOTOFACT STANDARD NOTATION SCHEMATIC
with CIRCUITRACE

© Howard W. Sams & Co., Inc. 1961

REMOTE CONTROL RECEIVER KRS25A

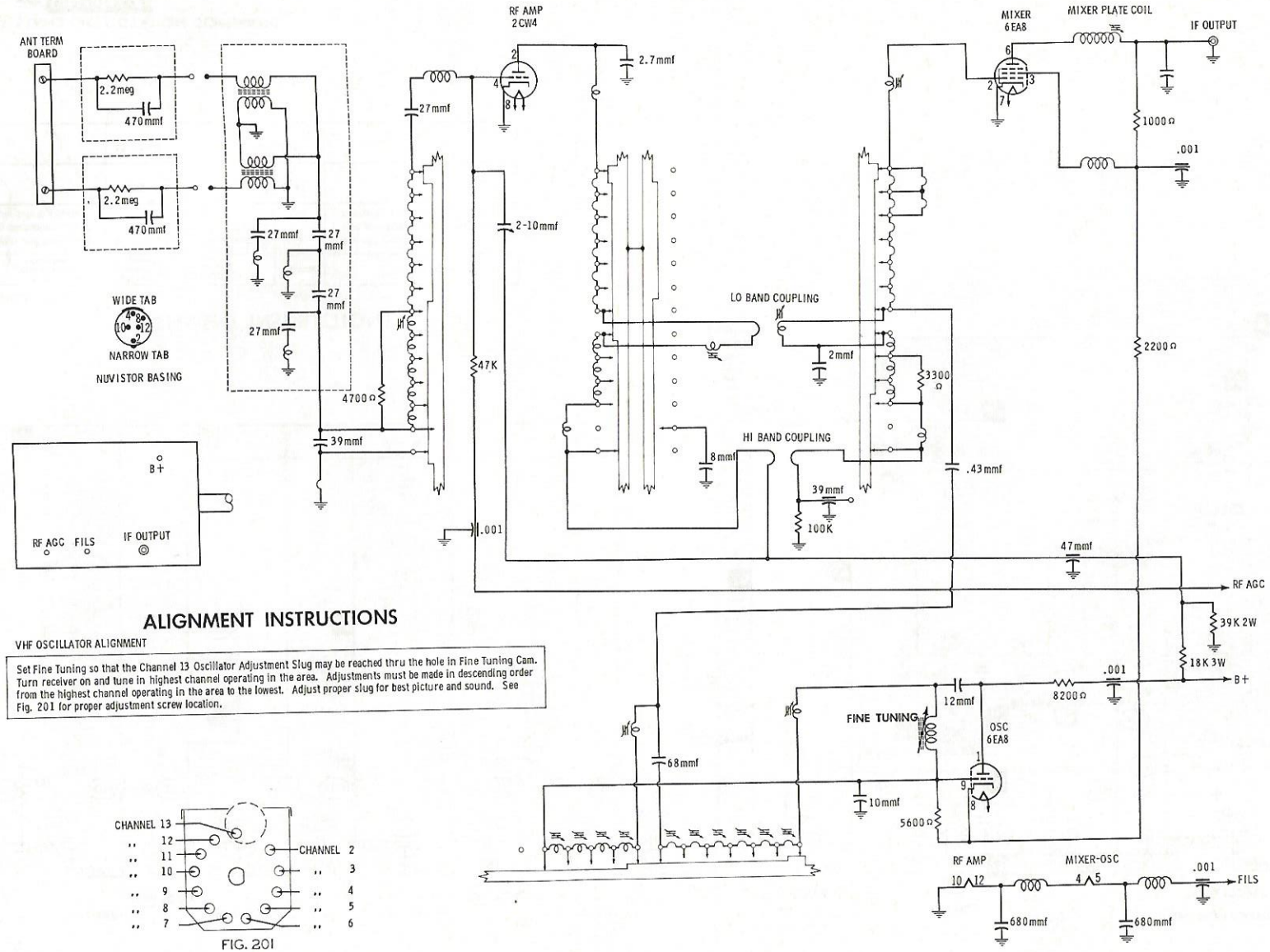

ALIGNMENT INSTRUCTIONS

VHF OSCILLATOR ALIGNMENT

Set Fine Tuning so that the Channel 13 Oscillator Adjustment Slug may be reached thru the hole in Fine Tuning Cam. Turn receiver on and tune in highest channel operating in the area. Adjustments must be made in descending order from the highest channel operating in the area to the lowest. Adjust proper slug for best picture and sound. See Fig. 201 for proper adjustment screw location.

FIG. 201

A PHOTOFACT STANDARD NOTATION SCHEMATIC
© Howard W. Sams & Co., Inc. 1961

VHF TUNER KRK103B

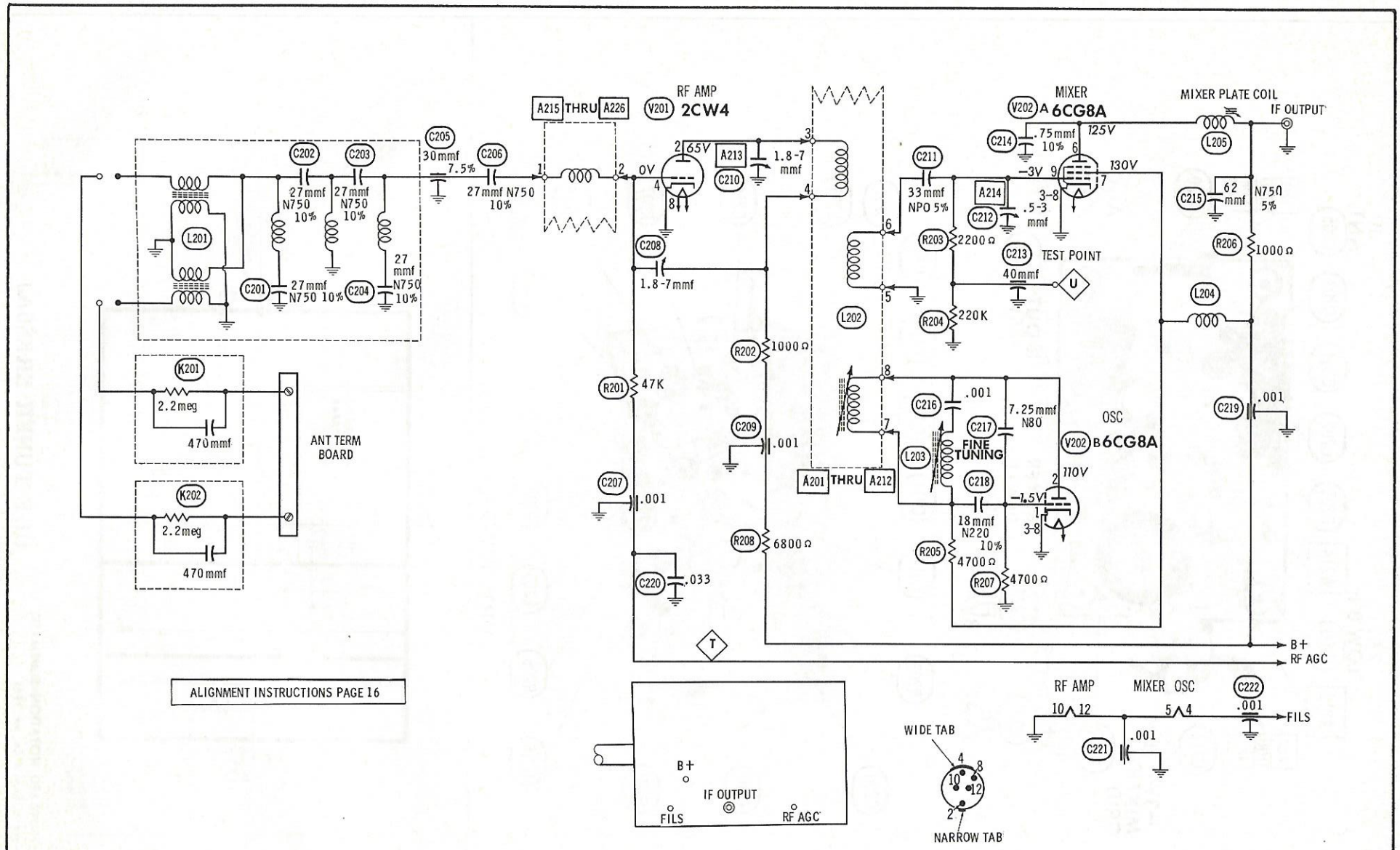

A PHOTOFACT STANDARD NOTATION SCHEMATIC

© Howard W. Sams & Co., Inc. 1961

VHF TUNER KRK102L

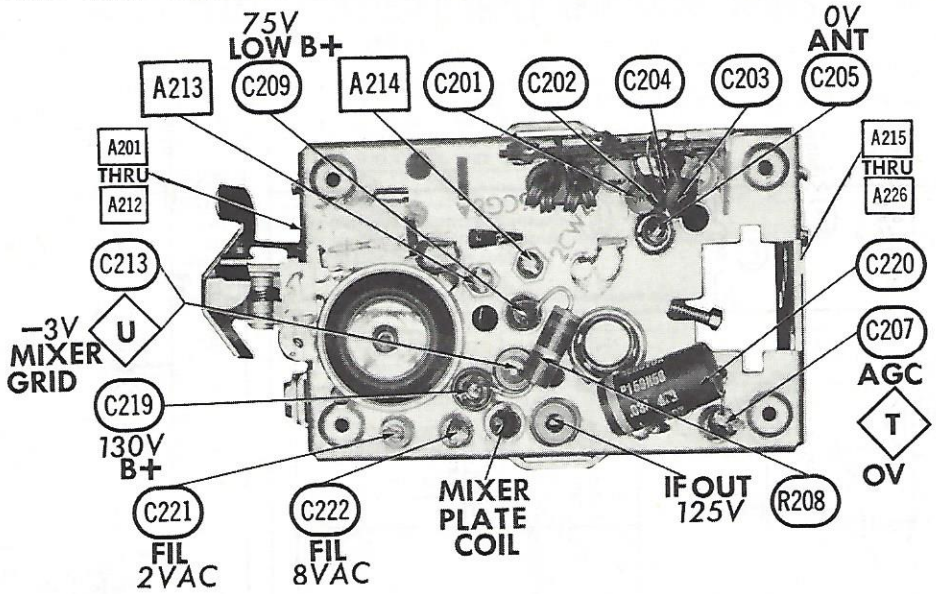

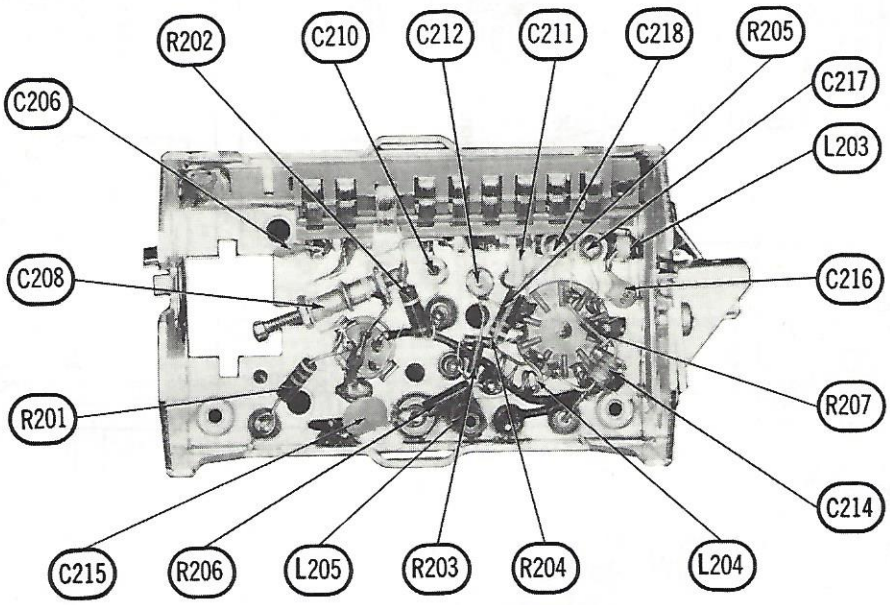

VHF TUNER KRK102L

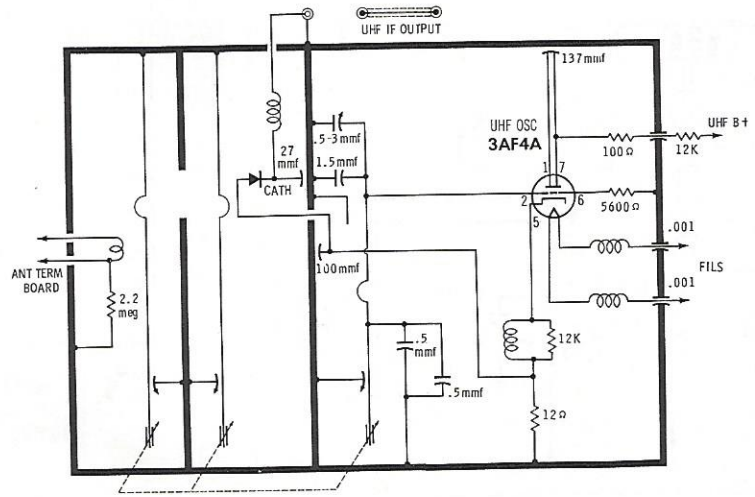

A PHOTOFACT STANDARD NOTATION SCHEMATIC

© Howard W. Sams & Co., Inc. 1961

UHF TUNER KRK66AJ

TV PARTS LIST AND DESCRIPTIONS

TUBES

ITEM No.	USE	TYPE (GENERAL ELECTRIC / RAYTHEON / SYLVANIA)
V1	1st Video IF Amp.	4BZ6
V2	2nd Video IF Amp.	5GM6
V3	3rd Video IF Amp.	5EW6
V4	Video Output - Sound IF Amp.	10HF8
V5	AGC Keying - Noise Lim.	6GY6
V6	Audio Detector	6GX6
V7	Audio Output	6AQ5A
V8	Vert. Mult. Cath. Clamper - Sync Separator	4AV6
V9	Vert. Mult. - Vert. Output	13EM7
V10	Horiz. AFC - Horiz. Osc.	8FQ7 (8CG7) *
V11	Horiz. Output	17GW6
V12	Damper	17DM4 (17AX4GTA)*
V13	HV Rectifier	1G3GT/1B3GT

* Alternate

PICTURE TUBE

ITEM No.	REPLACEMENT DATA: RCA Victor PART No.	GENERAL ELECTRIC PART No.	RCA PART No.	RAYTHEON PART No.	SYLVANIA PART No.	NOTES
V14	19AYP4		19AYP4 ①		19AYP4 ②	① Aluminized ② Silver Screen "85"

ELECTROLYTIC CAPACITORS

ITEM No.	RATING: CAP.	RATING: VOLT.	RCA Victor PART No.	AEROVOX PART No.	CORNELL-DUBILIER PART No.	GENERAL ELECTRIC PART No.	MALLORY PART No.	PYRAMID PART No.	SPRAGUE PART No.
C1	150	200	107472	AFH1-25-70		XC1-14	WP125.9	TD-150-200	TVLS-1539 *
C2A	▲150	350	109933	AFH3-112-77	B0334	XC4-11	WP420.25	TMD-2440	TVL-2643
B	■5	350			BR1005			TD-100-50	TVA-1310
C	▲100	50							
C3A	▲100	350	109689	AFH4-56-60	D0473.3	XC4-14	FP420.405	TMQ-4268	TVL-4632
B	■10	350							
C	▲5	150							
D	20	25							
C4	40	400	112099	PRS1750	BR4045	QT1-14	TC78	TD-40-450	TVA-1712
C5	100	25	108020	PRS1270	BBR100-25	QT1-23	TC2501	TD-100-25	TVA-1207
C6	20	12	106735	PTT55	NLW20-15	MT1-10	TT15X20	MLV20-12	TE-1130

* Not normally in distributor's stock. Available thru distributor on order to manufacturer.

FIXED CAPACITORS

ITEM No.	RATING			REMARKS	AEROVOX PART No.	CENTRALAB PART No.	CORNELL-DUBILIER PART No.	ELMENCO PART No.	MALLORY PART No.	SPRAGUE PART No.
C7	.001				BPD-001	DD-102	BYA10D1	CCD-102	B-210	5HK-D10
C8	68	NPO	5%			DTZ-68	C10Q68C	CM-19B-680J	CNO-468	10TCC-Q68
C9	15	N750	10%		N750-SI 15	TCN-15	C10Q15U	CCTN-150	CN7-415	10TCU-Q15
C10	15	N750	10%		N750-SI 15	TCN-15	C10Q15U	CCTN-150	CN7-415	10TCU-Q15
C11	10	NPO	5%	(14) †	NPO-SI 10	TCZ-10	C10Q1C	CCTO-100	CNO-410	10TCC-Q10
C12	47	NPO	5%			DTZ-47	C10Q47C	CM-19B-470J	CNO-447	10TCC-Q47
C13	110	NPO	5%			TCZ-110		CM-19B-111J	CNO-312	10TCC-T12
C14	.001				SI-1000	D6-102	BYA10D1	CCD-102	B-210	5HK-D10
C15	.001				SI-1000	D6-102	BYA10D1	CCD-102	B-210	5HK-D10
C16	.22	200V			P288N-22		CUB2P22	2DP-4-224	GEM-2022	2TM-P22
C17	470				SI 470	D6-471	BYA10T47	CCD-471	B-347	10TS-T47
C18	560			(.001) †	DI-560	DD-561	L10T56	CCD-561	B-356	10TS-T56
C19	.001				SI 1000	D6-102	BYA10D1	CCD-102	B-210	5HK-D10
C20	.001				SI 1000	D6-102	BYA10D1	CCD-102	B-210	5HK-D10
C21	.001				BPD-001	DD-102	BYA10D1	CCD-102	B-210	5HK-D10
C22	.001				BPD-001	DD-102	BYA10D1	CCD-102	B-210	5HK-D10
C23	.01			Note 1	BPD-01	DD-103	BYA10S1	CCD-103	B-110	5HK-S10
C24	.0047				BPD-0047	DD-472	BYA10D47M	CCD-472	B-247	5HK-D47
C25	470			(.001) †	DI-470	DD-471	BYA10T47	CCD-471	B-347	10TS-T47
C26	.022	200V	10%		V84C2S22-10%		PM4S22	4DP-2-223	GEM-1612	2TM-S22
C27	.001				SI 1000	D6-102	BYA10D1	CCD-102	B-210	5HK-D10
C28	12	N150	10%	#109932				*		10TCP-Q12
C29	3	N750	±1mmf			TCN-3R3			CN7-533	10TCU-V33
C30	39	N150	10%	#109931				*		10TCP-Q39
C31	33	N750	10%		N750-SI 33	TCN-33	C10Q33U	CCTN-330	CN7-433	10TCU-Q33
C32	100	N750	10%		N750-DI 100	DTN-100	C10T1U	CCTN-101	CN7-310	10TCU-T10
C33	47	N750	10%		N750-DI 47	DTN-47	C10Q47U	CCTN-470	CN7-447	10TCU-Q47
C34	.22	600V			P688N-22		CUB6P22	6DP-5-224	GEM-6022	6TM-P22
C35	.0047	600V			P688N-0047	D6-472	CUB6D47	6DP-1-472	GEM-6247	6TM-D47
C36	.047	400V			P488N-047	DD-503	CUB4S47	4DP-3-473	GEM-4147	4TM-S47
C37	.001				BPD-001	DD-102	BYA10D1	CCD-102	B-210	5HK-D10
C38	.0033				BPD-0033	DD-332	BYA10D33	CCD-332	B-233	5HK-D33
C39	56	N750	10%		N750-SI 56	TCN-56	C10Q56U	CCTN-560	CN7-456	10TCU-Q56
C40	.01				BPD-01	DD-103	BYA10S1	CCD-103	B-110	5HK-S10
C41	.001				SI 1000	D6-102	BYA10D1	CCD-102	B-210	5HK-D10
C42	.001				BPD-001	DD-102	BYA10D1	CCD-102	B-210	5HK-D10
C43	.01			(.0033) †	BPD-01	DD-103	BYA10S1	CCD-103	B-110	5HK-D10
C44	.047	200V			P488N-047	DD-503	CUB2S47	4DP-3-473	GEM-4147	2TM-S47
C45	.001				BPD-001	DD-102	BYA10D1	CCD-102	B-210	5HK-D10
C46	.01				BPD-01	DD-103	BYA10S1	CCD-103	B-110	5HK-S10
C47	.0039		10%		DI-4000		DPMSD39	CCD-392	JL-239	10TS-D39
C48	.01				BPD-01	DD-103	BYA10S1	CCD-103	B-110	5HK-S10
C49	.0033	600V	10%		V84C6D33-10%		PM6D33	6DP-1-332	JL-233	6TM-D33
C50	270		10%		DI-270	DD-271	L10T27	CCD-271	GP347	10TS-T27
C51	150		10%		DI-150	DD-151	L10T15	CCD-151	GP315	10TS-T15
C52	100	N750	10%		N750-DI 100	DTN-100	C10T1U	CCTN-101	CN7-315	10TCU-T10
C53	.047	400V			P488N-047	DD-503	CUB4S47	4DP-3-473	GEM-4147	4TM-S47
C54	.1	400V			P488N-1	DF-104	CUB4P1	4DP-3-104	GEM-401	4TM-P10
C55	.047	600V	10%		V84C6S47-10%		PM6S47	6DP-3-473	GEM-1615	6TM-S47
C56	.05				BPD-05	DD-503	CUB6S5	6DP-3-503	GP150	5HK-S50
C57	.0022		10%		DI-2200		PM6D22	CCD-222	GP222	10TS-D22
C58	.018	400V	10%		P684CM-018		PM4S2	4DP-2-203	GEM-1612	4TM-S20
C59	.0022	600V	10%		V84C6D22-10%		PM6D22	6DP-1-222	GP222	6TM-D22
C60	.0082	400V	10%		V84C6D82-10%		DPMS6D82	6DP-2-822	GEM-16282	6PS-D82
C61	.001	2000V	10%	#104222						
C62	.015	600V	10%				PM6S15	6DP-2-153		6TM-S15
C63	68	N750	10%		N750-DI 68	DTN-68	C10Q68U	CCTN-680	CN7-468	10TCU-Q68
C64	100	N750	10%		N750-DI 100	DTN-100	C10T1U	CCTN-101	CN7-310	10TCU-T10
C65	.001				BPD-001	DD-102	BYA10D1	CCD-102	B-210	5HK-D10

TV PARTS LIST AND

FIXED CAPACITORS (cont)

ITEM No.	RATING	REMARKS	REPLACEMENT DATA: AEROVOX PART No.	CENTRALAB PART No.	CORNELL-DUBILIER PART No.	ELMENCO PART No.	MALLORY PART No.	SPRAGUE PART No.
C66	.0012 10%		DI-1200	DD-122	DPMS6D12	CCD-122	GP212	10TS-D10
C67	.001		BPD-001	DD-102	BYA10D1	CCD-102	B-210	5HK-D10
C68	.056 600V 10%		P684CM-057		DPMS6S56	6DP-3-563		6PS-S56
C69	470 10%		DI-470	DD-471	5R5T47	CCD-471	GP347	10TS-T47
C70	470 5%		1469-00047		5R5T47	CM-19B-471J	MCJ244	MS-347
C71	.01 400V		P488N-01	D6-103	CUB4S1	4DP-1-103	GEM-411	4TM-S10
C72	.001		BPD-001	DD-102	BYA10D1	CCD-102	B-210	5HK-D10
C73	470 10%		1469-00047		5R5T47	CM-19B-471J	MCJ244	MS-347
C74	.1 200V		P288N-1	DF-104	CUB2P1	2DP-3-104	GEM-201	2TM-P10
C75	.001		BPD-001	DD-102	BYA10D1	CCD-102	B-210	5HK-D10
C76	.047 600V		P688N-047	DD-503	CUB6S47	6DP-3-473	GEM-6147	6TM-S47
C77	.022 600V 10%		V84C6S22-10%		PM6S22	6DP-2-223	GEM-1612	6TM-S22
C78	150 4000V N2200 10%	#109955	DI-470	DD-471	5R5T47	CCD-471	GP347	10TS-T47
C79	470 10%						6DY-439	
C80	39 6000V 10%	Note 1			HVA20Q82		2DY-482	
C81	82 2000V 10%	#107419	DAC-2	DD30-102	HVB16D1	3CCD-102	UAC-210	BL-D10
C82	.001 1400V	Note 1	BPD-001	DD-102	BYA10D1	CCD-102	B-210	5HK-D10
C83	.001		BPD-0047	DD-472	BYA10D47M	CCD-472	B-247	5HK-D47
C84	.0047		BPD-0047	DD-472	BYA10D47M	CCD-472	B-247	5HK-D47
C85	.0047		BPD-0047	DD-472	BYA10D47M	CCD-472	B-247	5HK-D47
C86	.0047		P688N-1	DF-104	CUB6P1	6DP-4-104	GEM-601	6TM-P10
C87	.1 600V	(.047) †	P688N-1	DF-104	CUB6P1	6DP-4-104	GEM-601	6TM-P10
C88	.1 600V	Note 1	P688N-047	DD-503	CUB6S47			
C89	.047 600V		BPD-001	DD-102	BYA10D1	CCD-102	GP210	10TS-D10
C90	.001							

† Alternate Value
# RCA Victor Part Number
* Not normally in distributor's stock. Available thru distributor on order to manufacturer.
Note 1. May not be used in some versions.

CONTROLS

ITEM No.	RATING: RESISTANCE	RATING: WATTS	REPLACEMENT DATA: RCA Victor PART No.	CENTRALAB PART No.	CLAROSTAT PART No.	CTS-IRC PART No.	MALLORY PART No.	INSTALLATION NOTES
R1	1meg	½	112134 ①					Volume
R2A	30K	½	109937			B20-121X		Contrast
	20K Tap							
B	Shaft					SK1		
R3A	200K	½	109934	TT-46	B47-200K-S	B11-129	TA254L	Brightness
B	Shaft			Not Req.	Not Req.	TM4	Not Req.	
R4A	1meg	½	109936	TT-69	B47-1meg-S	B11-137	TA16L	Vert. Hold
B	Shaft			Not Req.	Not Req.	TM4	Not Req.	
R5	22K	½	109935	TT-26	B47-25K-S	B11-120	TA253L	Horiz. Hold
	Shaft			Not Req.	Not Req.	TM4	Not Req.	
R6A	1200Ω	2(WW)	109939	WN-152	A43-1500	WPS1500	R1500L	Vert. Linearity
B	Shaft			Not Req.	FKS-1/4	Not Req.	Not Req.	
R7A	100K	1/10	109958					AGC
B	15K	1/10						Sync Stabilizer
C	1meg	1/10						Height
D	800K	1/10						Height Limiter

① Used in Chassis KCS137P. Chassis KCS137A, B use Part #109938.

RESISTORS

All wattages 1/2 watt, or less, unless otherwise listed.

ITEM No.	RATING	REPLACEMENT DATA: IRC PART No.	WORKMAN TV PART No.	REMARKS
R8	22K 5%			
R9	2700Ω 5%			
R10	1000Ω			
R11	10Ω			
R12	56Ω 5%			
R13	820Ω			
R14	15K			
R15	150K 5%			
R16	12K 5%			
R17	820Ω			
R18	150K 5%			
R19	12Ω 5%			
R20	6800Ω 5%			
R21	470Ω			
R22	150Ω 5%			
R23	5600Ω			
R24	100K			(82K) *
R25	330Ω			
R26	3600Ω 5%			
R27	10K			
R28	8200Ω 7W	PW7-8200	7W-SQ-8200	
R29	470K			
R30	56K			
R31	56K			
R32	15Ω			
R33	18K 2W			
R34	5600Ω 1W			
R35	120K			
R36	1meg			
R37	3900Ω			
R38	180K			
R39	27K			
R40	1.8meg			
R41	3.9meg			
R42	100K			
R43	47K 1W			
R44	270Ω			
R45	4700Ω			
R46	330K			
R47	1000Ω 1W			
R48	47K 2W			
R49	470K			
R50	4700Ω			
R51	560Ω			
R52	2200Ω 4W	PW5-2200	5W-SQ-2200	
R53	680Ω 1W			
R54	2.2meg			
R55	10K			
R56	220K 1W			
R57	22K			
R58	1meg			
R59	1.8meg			
R60	10meg			
R61	4700Ω			
R62	8.2meg			
R63	5600Ω			
R64	390Ω			
R65	180K			
R66	12K 2W			
R67	5.6meg			
R68	27K			
R69	4700Ω			
R70	5600Ω			
R71	4700Ω 3W	PW3-4700	3W-SQ-4700	
R72	270K			
R73	100K			
R74	220K			
R75	68K			
R76	33K			
R77	82K			
R78	39K			
R79	100K			
R80	220K			
R81	2.2meg			
R82	2700Ω			
R83	470K			
R84	10meg			
R85	1000Ω			
R86	27K			
R87	22K			
R88	100K			
R89	270Ω 4W	PW5-270	5W-SQ-270	
R90	3300Ω			
R91	150Ω			
R92	150Ω			
R93	3.5Ω Cold			#107464
R94	390K			
R95	390K			
R96	560K			
R97	120K			
R98	100K			
R99	100K			
R100	47K			
R101	2200Ω			
R102	75K 5%			
R103	390K			
R104	560K			
R105	47Ω			

RESIS

ITEM No.	RATING	REPLACEMENT DATA: IRC PART No.	WORKMAN TV PART No.	REMARKS
R106	470K			
R107	8200Ω 3W	PW3-8200	3G-8200	
R108	1.2Ω			
R109	5Ω 7W	PW7-5	7W-SQ-5	
R110	3300Ω			

* Alternate — Note 1.
# RCA Victor Part Number — Note 2.

COMPONEN

ITEM No.	USE	DESCRIPTIO
K1	Vert. Integrator	.003mfd, 90K
K2	Vert. Feedback	.0024mfd, 68K

CO

ITEM No.	USE	REPLAC: RCA Victor PART No.	Merit PART No.
L1A	47.25MC Trap	109322	
B	39.25MC Trap		
L2A	1st Video IF	109323	
B	41.25MC Trap		
L3	2nd Video IF	109071	
L4	3rd Video IF	109158	
L5	4th Video IF	109321	
L6	Peaking (36uh)	109758	TV-180
L7	Peaking (250uh)	109944	TV-185
L8	RF Choke (2.7uh)	107463	SW-630
L9	Peaking (72uh)	109943	TV-186
L10A	4.5MC Trap	109949	TV-236
B	Sound Takeoff		
L11	Peaking (390uh)	109945	TV-199
L12	Peaking (180uh)	109946	TV-184
L13	Sound IF	109951	
L14	Quadrature	109948	
L15	RF Choke (8.2uh)	107385	BC-566
L16	RF Choke (8.2uh)	107385	BC-566
L17	Fil. Choke (1uh)	73477	BC-561
L18	Line Choke	①	

COILS (

ITEM No.	USE	RCA Victor PART No.	Merit PART No.
L19A	Horiz. Osc.	109947	
B	Horiz. Stabilizer		
L20	Width	109942	MWC-6

FIL

ITEM No.	RATINGS: CURRENT (Measured)	DC RES.	INDUCTANCE (0 CURRENT 1000 ∿)	RCA Victor PART No.
L21	.290A	50Ω	.7 Hy.	100286

TRANSFORM

ITEM No.	USE	RCA Victor PART No.	Mer PART
T1	Vert. Output	109685	
T2	Yoke (Horiz. 18MH) (114°) (Vert. 14MH)	109962	
	Yoke Clamp	104409	
T3	Horiz. Output	109961	

TRANSF

ITEM No.	RATING: PRI.	SEC. 1	SEC. 2	RCA Victor PART No.
T4	117V ⓐ .100A	6.3V ⓐ 1.8A		112135

① Drill new mounting hole(s).

TRANSFORM

ITEM No.	IMPEDANCE: PRI.	SEC.	RCA Victor PART No.	Merit PART No
T5	8200Ω	3-4Ω	109950	A-2900

S

ITEM No.	TYPE: SIZE	FIELD	V. C. IMP.	REPLACEMENT D: RCA Victor PART No.	P
SP1	3" x 5"	PM	3-4Ω	107262	3

)ESCRIPTIONS (Continued)

RS (cont)

ITEM No.	RATING	REPLACEMENT DATA IRC PART No.	WORKMAN TV PART No.	REMARKS
R111 R112 R113 R114	56K 2W 10K 1W 5100Ω 7W 22Ω	PW7-5100	7W-SQ-5100	Note 1 Note 2

in Chassis KS137A, B.
ot be used in some versions.

COMBINATIONS

	RCA Victor PART No.	REPLACEMENT DATA
	109326 109325	Centralab PC-407 Sprague V-15 Centralab PC-408 Sprague V-14

(RF-IF)

DATA iller T No.	Stancor PART No.	Workman TV PART No.	NOTES
		TB295	
		TC200	
		TB298 TB297 TB296	
3	RTC-8573	T301	
	RTC-8598	T346	
6	RTC-8517	T814	
2	RTC-8590	T339	
-A †			† Remove Capacitors.
5	RTC-8587	T348	
0	RTC-8597	T344	
1	RTC-8521	T960	
1	RTC-8521	T960	
2	RTC-8515	T855	
			① Not used in some versions.

EP CIRCUITS)

EMENT DATA r No.	Stancor PART No.	Thordarson PART No.	Triad PART No.	Workman TV PART No.	NOTES
		HS-19			
	WC-8	WC-22	WLC-6	T107	

CHOKE

CEMENT DATA it No.	Stancor PART No.	Thordarson PART No.	Triad PART No.	NOTES
	C-2343		C-34X	

(SWEEP CIRCUITS)

MENT DATA Stancor PART No.	Thordarson PART No.	Triad PART No.	NOTES
VO-101	26S07	A-140X	
DY-26A ①	Y-47 ①	Y-60-1	① Use original yoke damping network if necessary.

IER (FILAMENT)

ACEMENT DATA t No.	Stancor PART No.	Thordarson PART No.	Triad PART No.	NOTES
6 0	P-6466 ①②	21F40 ②	F-43X ①	

② Tape CT on 6.3V winding.

AUDIO OUTPUT)

ENT DATA ncor T No.	Thordarson PART No.	Triad PART No.	NOTES
56 ①	24S49	S-8X	① Drill new mounting hole(s).

KER

NOTES

POWER RECTIFIERS

ITEM No.	RATING CURRENT (Measured)	REPLACEMENT DATA RCA Victor PART No.	RCA PART No.	SARKES TARZIAN PART No.	NOTES
M1	.290A	106379	1N1763	40H	
M2	.290A	106379	1N1763	40H	

FUSES

ITEM No.	TYPE	RATING	REPLACEMENT DATA RCA Victor PART No. FUSE	RCA Victor PART No. HOLDER	LITTELFUSE PART No. FUSE	LITTELFUSE PART No. HOLDER	BUSS PART No. FUSE	BUSS PART No. HOLDER
M3	Chemical	.4A	109588	109941			GMW	HWA

SIGNAL DIODES

ITEM No.	ORIG. TYPE	REPLACEMENT DATA RCA Victor PART No.	GENERAL ELECTRIC PART No.	RAYTHEON PART No.	NOTES
M4		109328 *	6GC1 *		* Horiz. AFC, Dual Selenium, Common Cathode Type

MISCELLANEOUS

ITEM No.	PART NAME	RCA Victor PART No.	NOTES
M5	Tuner (KRK102L)	112173	VHF, Complete, Chassis KCS137P
	Tuner (KRK103B)		VHF, Complete, Chassis KCS137A
	Tuner (KRK104B)	112052	VHF with UHF Provisions, Chassis KCS137B
	Tuner (KRK66AJ)	112170	UHF, Chassis KCS137B
M6	Tuner Mounting Assembly	TMA26A	Includes Motor and Gear Assembly Part #112102, Mute Switch Assembly Part #112144, Programmer Switch Assembly Part #112146, and Motor Switch Part #112103
M7	Relay		Channel Selector, Chassis KCS137P
M8	Relay	110216	Volume Selector, Chassis KCS137P
M9	Antenna	109920	2 Required, JFD REPLACEMENT #TA413
	Printed Board	109959	Video and IF, Less Tubes
	Printed Board	109960	Deflection, Less Tubes

WIRING DATA

High Voltage Lead ..... Use BELDEN No. 8869
Shielded Hook-up Wire ..... Use BELDEN No. 8885 (Single Conductor)
8738 (Two Conductor)
General-use Unshielded Hook-up Wire ..... Use BELDEN No. 8530 (Solid) Available in Ten Colors
8524 (Stranded) Available in Ten Colors
Power Cord (Interlock Type) ..... Use BELDEN No. 8874
300Ω Tuner Input Lead ..... Use BELDEN No. 8225
300Ω Antenna Lead-in ..... Use BELDEN No. 8230 or 8275
Antenna Rotor Cable ..... Use BELDEN No. 8464 (Flat) or 8484 (Round) - 4 Conductor
8485 (Round) - 5 Conductor
8488 (Round) - 8 Conductor

CABINETS & CABINET PARTS

(When Ordering Cabinets & Cabinet Parts, Specify Model, Chassis & Color)

DESCRIPTION	PART NO.	MODEL NO. 192A072MU	192A072MV	192A072RS	192A075MU	192A075MV	192A078MU	192A078MV	192A079MU	192A079MV	192A079RS
Safety Glass	109919	X	X	X	X	X	X	X	X	X	X
Mask	112088		X								
Mask	112089	X									
Mask	112137			X							
Mask	112090					X					
Mask	112091				X						
Mask	112092							X			
Mask	112093						X				
Mask	112094									X	
Mask	112095								X		
Knob-VHF Channel Selector	109963 †	X	X				X	X			
Knob-VHF Channel Selector	109964 †				X	X					
Knob- Channel Selector, Fine Tuning	109922 ‡			X							
Knob-Fine Tuning	109966 ‡	X	X				X	X			
Knob-Fine Tuning	109965 ‡				X	X			X	X	
Knob-UHF Tuning	109924 †	X			X		X		X		
Dial-UHF	109929 ††	X			X		X		X		
Knob-Contrast, Volume	109922 ‡	X	X	X			X	X			
Knob-Contrast, Volume	109923 ‡				X	X			X	X	
Handle (Ivory Only)	109917	X	X	X	X	X	X	X	X	X	X

† Uses Retaining Spring Part #76837.
‡ Uses Retaining Spring Part #109288.
†† Uses Retaining Spring Part #100584.

REMOTE CONTROL RECEIVER PARTS LIST AND DESCRIPTIONS

TUBES

ITEM No.	USE	TYPE (GENERAL ELECTRIC)	TYPE (RAYTHEON)	TYPE (SYLVANIA)
V15	1st - 2nd 40KC Amp.	12AX7		
V16	3rd - 4th 40KC Amp.	12AX7		
V17	40KC Driver - AGC - Bias Rect.			6AV6
V18	Volume Relay Control Amp.			12BH7

TRANSISTORS

ITEM No.	ORIG. TYPE	USE	REPLACEMENT DATA: RCA PART No.	REPLACEMENT DATA: RAYTHEON PART No.	NOTES
X1	3852	Channel Selector Relay Control Amp.	2N217		PNP

ELECTROLYTIC CAPACITORS

ITEM No.	RATING: CAP.	RATING: VOLT.	RCA Victor PART No.	AEROVOX PART No.	CORNELL-DUBILIER PART No.	GENERAL ELECTRIC PART No.	MALLORY PART No.	PYRAMID PART No.	SPRAGUE PART No.
C91	5	50	218513	PTT90	NLW5-50	MT1-3	TT50X5	MLV5-50	TE-1303

FIXED CAPACITORS

ITEM No.	RATING	REMARKS	AEROVOX PART No.	CENTRALAB PART No.	CORNELL-DUBILIER PART No.	ELMENCO PART No.	MALLORY PART No.	SPRAGUE PART No.
C92	.1 400V		P488N-1	DF-104	CUB4P1	4DP-3-104	GEM-401	4TM-P10
C93	330		DI-330	DD-331	L10T33	CCD-331	GP333	10TS-T33
C94	.22 400V		P488N-22		CUB4P22	4DP-5-224	GEM-4022	4TM-P22
C95	120 N2200	#105242				*		
C96	.01		BPD-01	DD-103	BYA10S1	CCD-103	B-110	5HK-S10
C97	120 N2200	#105242				*		
C98	120 N2200	#105242				*		
C99	.001		BPD-001	DD-102	BYA10D1	CCD-102	B-210	5HK-D10
C100	120 N2200	#105242				*		
C101	.01		BPD-01	DD-103	BYA10S1	CCD-103	B-110	5HK-S10
C102	.027 400V 10%		P684CM-027		DPMS6S27	6DP-3-273	GEM-1613	6PS-S27
C103	.001 10%		1469-001		5R5D1	CM-19B-102K	MCB255	MS-21
C104	.01		BPD-01	DD-103	BYA10S1	CCD-103	B-110	5HK-S10
C105	.01		BPD-01	DD-103	BYA10S1	CCD-103	B-110	5HK-S10
C106	.001 10%		1469-001		5R5D1	CM-19B-102K	MCB255	10TS-D10
C107	.01		BPD-01	DD-103	BYA10S1	CCD-103	B-110	5HK-S10
C108	.01		BPD-01	DD-103	BYA10S1	CCD-103	B-110	5HK-S10
C109	680 10%		1469-00068		5R5T68	CM-19B-681K	MCJ249	MS-368
C110	.1 400V		P488N-1	DF-104	CUB4P1	4DP-3-104	GEM-401	4TM-P10

RCA Victor Part Number
* Not normally in distributor's stock. Available thru distributor on order to manufacturer.

RESISTORS

All wattages 1/2 watt, or less, unless otherwise listed.

ITEM No.	RATING	REPLACEMENT DATA: IRC PART No.	REPLACEMENT DATA: WORKMAN TV PART No.	REMARKS
R115	100K			
R116	100K			
R117	100K			
R118	100K			
R119	100K			
R120	1meg			
R121	100K			
R122	2.2meg			
R123	100K			
R124	100K			
R125	68K			
R126	270K			
R127	100K			
R128	1meg			
R129	1meg			
R130	1meg			
R131	1meg			
R132	100K			
R133	47K			
R134	39Ω			
R135	100K			
R136	2200Ω			
R137	1meg			
R138	1meg			

COILS (RF-IF)

ITEM No.	USE	RCA Victor PART No.	Merit PART No.	Miller PART No.	Stancor PART No.	Workman TV PART No.	NOTES
L22	43.25KC	112022					
L23	39.5KC	112022					
L24	35.75KC	112021					

SIGNAL DIODES

ITEM No.	ORIG. TYPE	REPLACEMENT DATA: RCA Victor PART No.	REPLACEMENT DATA: GENERAL ELECTRIC PART No.	REPLACEMENT DATA: RAYTHEON PART No.	NOTES
M10		106952			Bias Regulator
M11		106952			Bias Regulator

MISCELLANEOUS

ITEM No.	PART NAME	RCA Victor PART No.	NOTES
	Printed Board	112184	Remote Control Receiver, Less Tubes

REMOTE CONTROL RECEIVER PARTS LIST AND DESCRIPTIONS

TUBES

• GENERAL ELECTRIC • RAYTHEON • SYLVANIA •

ITEM No.	USE	TYPE	ITEM No.	USE	TYPE
V15	1st - 2nd 40KC Amp.	12AX7	V17	40KC Driver - AGC - Bias Rect.	6AV6
V16	3rd - 4th 40KC Amp.	12AX7	V18	Volume Relay Control Amp.	12BH7

TRANSISTORS

ITEM No.	ORIG. TYPE	USE	REPLACEMENT DATA		NOTES
			RCA PART No.	RAYTHEON PART No.	
X1	3852	Channel Selector Relay Control Amp.	2N217		PNP

ELECTROLYTIC CAPACITORS

ITEM No.	RATING		REPLACEMENT DATA						
	CAP.	VOLT.	RCA Victor PART No.	AEROVOX PART No.	CORNELL-DUBILIER PART No.	GENERAL ELECTRIC PART No.	MALLORY PART No.	PYRAMID PART No.	SPRAGUE PART No.
C91	5	50	218513	PTT90	NLW5-50	MT1-3	TT50X5	MLV5-50	TE-1303

FIXED CAPACITORS

ITEM No.	RATING			REMARKS	REPLACEMENT DATA					
					AEROVOX PART No.	CENTRALAB PART No.	CORNELL-DUBILIER PART No.	ELMENCO PART No.	MALLORY PART No.	SPRAGUE PART No.
C92	.1	400V			P488N-1	DF-104	CUB4P1	4DP-3-104	GEM-401	4TM-P10
C93	330				DI-330	DD-331	L10T33	CCD-331	GP333	10TS-T33
C94	.22	400V			P488N-22		CUB4P22	4DP-5-224	GEM-4022	4TM-P22
C95	120	N2200		#105242				*		
C96	.01				BPD-01	DD-103	BYA10S1	CCD-103	B-110	5HK-S10
C97	120	N2200		#105242				*		
C98	120	N2200		#105242				*		
C99	.001				BPD-001	DD-102	BYA10D1	CCD-102	B-210	5HK-D10
C100	120	N2200		#105242				*		
C101	.01				BPD-01	DD-103	BYA10S1	CCD-103	B-110	5HK-S10
C102	.027	400V	10%		P684CM-027		DPMS6S27	6DP-3-273	GEM-1613	6PS-S27
C103	.001		10%		1469-001		5R5D1	CM-19B-102K	MCB255	MS-21
C104	.01				BPD-01	DD-103	BYA10S1	CCD-103	B-110	5HK-S10
C105	.01				BPD-01	DD-103	BYA10S1	CCD-103	B-110	5HK-S10
C106	.001		10%		1469-001		5R5D1	CM-19B-102K	MCB255	10TS-D10
C107	.01				BPD-01	DD-103	BYA10S1	CCD-103	B-110	5HK-S10
C108	.01				BPD-01	DD-103	BYA10S1	CCD-103	B-110	5HK-S10
C109	680		10%		1469-00068		5R5T68	CM-19B-681K	MCJ249	MS-368
C110	.1	400V			P488N-1	DF-104	CUB4P1	4DP-3-104	GEM-401	4TM-P10

RCA Victor Part Number
* Not normally in distributor's stock. Available thru distributor on order to manufacturer.

RESISTORS

All wattages 1/2 watt, or less, unless otherwise listed.

ITEM No.	RATING	REPLACEMENT DATA			ITEM No.	RATING	REPLACEMENT DATA		
		IRC PART No.	WORKMAN TV PART No.	REMARKS			IRC PART No.	WORKMAN TV PART No.	REMARKS
R115	100K				R127	100K			
R116	100K				R128	1meg			
R117	100K				R129	1meg			
R118	100K				R130	1meg			
R119	100K				R131	1meg			
R120	1meg				R132	100K			
R121	100K				R133	47K			
R122	2.2meg				R134	39Ω			
R123	100K				R135	100K			
R124	100K				R136	2200Ω			
R125	68K				R137	1meg			
R126	270K				R138	1meg			

COILS (RF-IF)

ITEM No.	USE	REPLACEMENT DATA					NOTES
		RCA Victor PART No.	Merit PART No.	Miller PART No.	Stancor PART No.	Workman TV PART No.	
L22	43.25KC	112022					
L23	39.5KC	112022					
L24	35.75KC	112021					

SIGNAL DIODES

ITEM No.	ORIG. TYPE	REPLACEMENT DATA			NOTES
		RCA Victor PART No.	GENERAL ELECTRIC PART No.	RAYTHEON PART No.	
M10		106952			Bias Regulator
M11		106952			Bias Regulator

MISCELLANEOUS

ITEM No.	PART NAME	RCA Victor PART No.	NOTES
	Printed Board	112184	Remote Control Receiver, Less Tubes

REMOTE CONTROL TRANSMITTER PARTS LIST AND DESCRIPTIONS

KRT3A

REMOTE CONTROL TRANSMITTER

ITEM No.	PART NAME	RCA Victor PART No.	NOTES
	Tuning Rod	109995	Volume Up (43.25KC)
	Tuning Rod	109997	Volume Down (35.75KC)
	Tuning Rod	109996	Channel Selector (39.50KC)
	Clip (Tuning Rod)	109999	6 Required
	Top Case Assembly	112003	
	Bottom Case Assembly	112004	
	Selector (Channel)	112005	3 Required
	Grille (Cabinet)	112002	

VHF TUNER PARTS LIST AND DESCRIPTIONS

KRK102L

TUBES

ITEM No.	USE	TYPE	ITEM No.	USE	TYPE
V201	RF Amp.	2CW4	V202	Mixer - Osc.	6CG8A

FIXED CAPACITORS

ITEM No.	RATING	REMARKS	REPLACEMENT DATA					
			AEROVOX PART No.	CENTRALAB PART No.	CORNELL-DUBILIER PART No.	ELMENCO PART No.	MALLORY PART No.	SPRAGUE PART No.
C201	27 N750 10%		N750-DI 25	TCN-27	C10Q27U	CCTN-270	CN7-427	10TCU-Q27
C202	27 N750 10%		N750-DI 25	TCN-27	C10Q27U	CCTN-270	CN7-427	10TCU-Q27
C203	27 N750 10%		N750-DI 25	TCN-27	C10Q27U	CCTN-270	CN7-427	10TCU-Q27
C204	27 N750 10%		N750-DI 25	TCN-27	C10Q27U	CCTN-270	CN7-427	10TCU-Q27
C205	30 7.5%	#107876						
C206	27 N750 5%			TCN-27	C10Q27U	CCTN-270	CN7-427	10TCU-Q27
C207	.001		EF-001	MFT-1000		CCF-102	CT280A	
C208	1.8-7			829-7				
C209	.001		EF-001	MFT-1000		CCF-102	CT280A	
C210	1.8-7	#109598		829-7				
C211	33 NPO 5%			TCZ-33	C10Q33C		CNO-433	10TCC-Q33
C212	.5-3			829-3		CV-1	CT565	
C213	40	#107881						
C214	.75 10%	#109425						
C215	62 N750 5%			TCN-62	C10Q62U	CCTN-620		
C216	.001		BPD-001	DD-102	BYA10D1	CCD-102	B-210	5HK-D10
C217	7.25 N80	#109424						
C218	18 N220 10%	#107884				*		10TCR-Q18
C219	.001		EF-001	MFT-1000		CCF-102	CT280A	
C220	.033 200V		P288N-033	DD-303	DPMS4S33	4DP-2-333	GEM-4133	4PS-S33
C221	.001		EF-001	MFT-1000		CCF-102	CT280A	
C222	.001		EF-001	MFT-1000		CCF-102	CT280A	

RCA Victor Part Number
* Not normally in distributor's stock. Available thru distributor on order to manufacturer.

RESISTORS

All wattages 1/2 watt, or less, unless otherwise listed.

ITEM No.	RATING	REPLACEMENT DATA			ITEM No.	RATING	REPLACEMENT DATA		
		IRC PART No.	WORKMAN TV PART No.	REMARKS			IRC PART No.	WORKMAN TV PART No.	REMARKS
R201	47K				R205	4700Ω			
R202	1000Ω				R206	1000Ω			
R203	2200Ω				R207	4700Ω			
R204	220K				R208	6800Ω			

COMPONENT COMBINATIONS

ITEM No.	USE	DESCRIPTION	RCA Victor PART No.	REPLACEMENT DATA
K201	Antenna Filter	470mmf, 2.2meg	109956	
K202	Antenna Filter	470mmf, 2.2meg	109956	

COILS (RF-IF)

ITEM No.	USE	RCA Victor PART No.	NOTES	ITEM No.	USE	RCA Victor PART No.	NOTES
L201	Ant. Trans.	109615	Complete Ass'y	L202H	Ant., RF, Mixer & Osc.	109606	Channel 9
L202A	Ant., RF, Mixer & Osc.	109599	Channel 2	J	"	109607	Channel 10
B	"	109600	Channel 3	K	"	109608	Channel 11
C	"	109601	Channel 4	L	"	109609	Channel 12
D	"	109602	Channel 5	M	"	109610	Channel 13
E	"	109603	Channel 6	L203	Fine Tuning	107888	
F	"	109604	Channel 7	L204	RF Choke		
G	"	109605	Channel 8	L205	Mixer Plate	109619	

VHF TUNER ALIGNMENT INSTRUCTIONS

KRK102L

PRE-ALIGNMENT INSTRUCTIONS

USE AN ISOLATION TRANSFORMER TO PROTECT THE TEST EQUIPMENT.
Suggested Alignment Tools: A201 thru A212 .... GENERAL CEMENT #5009, 8195, 8274, 8275, 8728, 8729, 8987, 8988, 8989
WALSCO #2515, 2531, 2532
A213, A214 ..... GENERAL CEMENT #8697, 9291, 9294
WALSCO #2520, 2522, 2523, 2524, 2534, 2537

VHF OSCILLATOR ALIGNMENT

Connect the negative lead of a 3 volt bias supply to point (T). Positive to chassis.
The generator output lead should be terminated with its characteristic impedance, usually 50 ohms.
Use only enough sweep generator output to provide a usable pattern on scope.
Set the Fine Tuning to the Center of its range.
Connect a 39 ohm composition resistor in series with a 1000mmf capacitor across the tuner output jack.

	SIGNAL GENERATOR COUPLING	SIGNAL GENERATOR FREQUENCY	CHANNEL	CONNECT SCOPE	ADJUST	REMARKS
1.	Across VHF antenna terminals thru matching pad (See Fig. 201).	257MC	13	Vert. Amp. thru 10K to point (U). Low side to chassis.	A201	Adjust for zero beat.
	"	251MC	12	"	A202	"
	"	245MC	11	"	A203	"
	"	239MC	10	"	A204	"
	"	233MC	9	"	A205	"
	"	227MC	8	"	A206	"
	"	221MC	7	"	A207	"
	"	129MC	6	"	A208	"
	"	123MC	5	"	A209	"
	"	113MC	4	"	A210	"
	"	107MC	3	"	A211	"
	"	101MC	2	"	A212	"

VHF RF AND MIXER ALIGNMENT

Connect Bias as under "VHF Oscillator Alignment".
Connect the synchronized sweep voltage from the sweep generator to the horizontal input of the oscilloscope for horizontal deflection.
The generator output lead should be terminated with its characteristic impedance, usually 50 ohms.
Use only enough sweep generator output to provide a usable pattern on scope.
Leave tuner output jack terminated as under "VHF Oscillator Alignment".

	SWEEP GENERATOR COUPLING	SWEEP GENERATOR FREQUENCY	MARKER GENERATOR FREQUENCY	CHANNEL	CONNECT SCOPE	ADJUST	REMARKS
2.	Across VHF antenna terminals thru matching pad (Fig. 201).	195MC (10MC Swp.)	193.25MC 197.75MC	10	Vert. Amp. thru 10K to point (U). Low side to chassis.	A213, A214	Adjust for maximum gain and symmetry of response similar to Fig. 202 with markers as shown.
	"	213MC	211.25MC 215.75MC	13	"	A215	If necessary, adjust to correct for improper tilt.
	"	207MC	205.25MC 209.75MC	12		A216	Adjust by expanding or compressing coil turns.
	"	201MC	199.25MC 203.75MC	11		A217	"
	"	195MC	193.25MC 197.75MC	10		A218	"
	"	189MC	187.25MC 191.75MC	9		A219	"
	"	183MC	181.25MC 185.75MC	8		A220	"
	"	177MC	175.25MC 179.75MC	7		A221	"
	"	85MC	83.25MC 87.75MC	6		A222	"
	"	79MC	77.25MC 81.75MC	5		A223	"
	"	69MC	67.25MC 71.75MC	4		A224	"
	"	63MC	61.25MC 65.75MC	3		A225	"
	"	57MC	55.25MC 59.75MC	2		A226	"

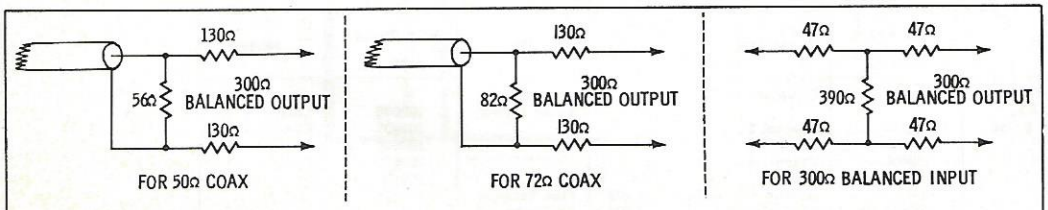

FIG. 201

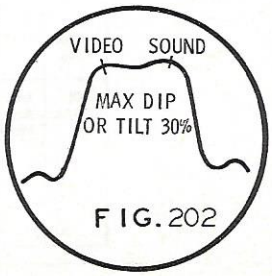

FIG. 202

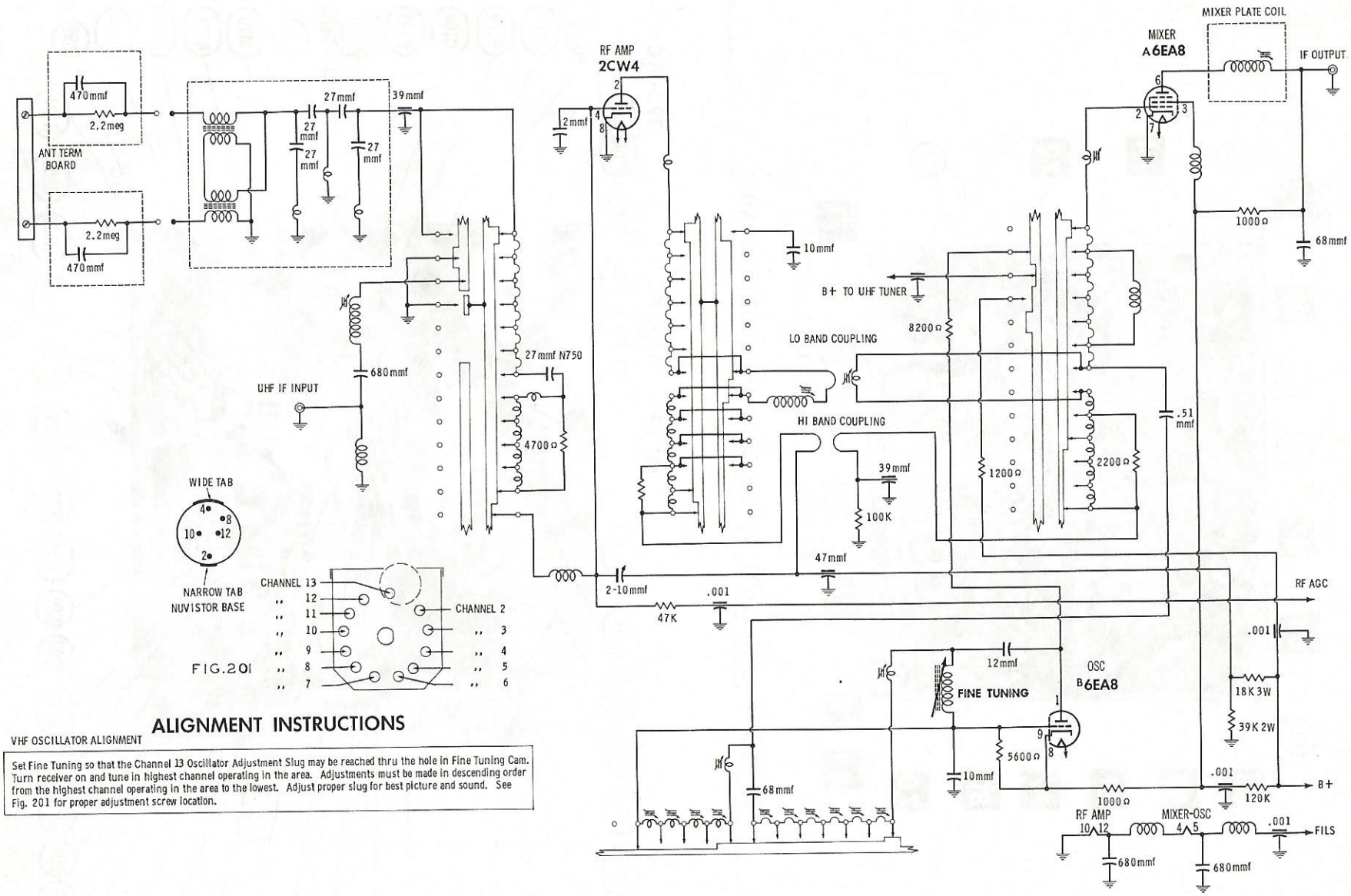

ALIGNMENT INSTRUCTIONS

VHF OSCILLATOR ALIGNMENT

Set Fine Tuning so that the Channel 13 Oscillator Adjustment Slug may be reached thru the hole in Fine Tuning Cam. Turn receiver on and tune in highest channel operating in the area. Adjustments must be made in descending order from the highest channel operating in the area to the lowest. Adjust proper slug for best picture and sound. See Fig. 201 for proper adjustment screw location.

A PHOTOFACT STANDARD NOTATION SCHEMATIC

© Howard W. Sams & Co., Inc. 1961

VHF TUNER WITH UHF PROVISIONS KRK104B

A Howard W. Sams CIRCUITRACE Photo

ARROWS INDICATING TUBE LOCATIONS ARE POINTING TO PIN 1 UNLESS OTHERWISE INDICATED

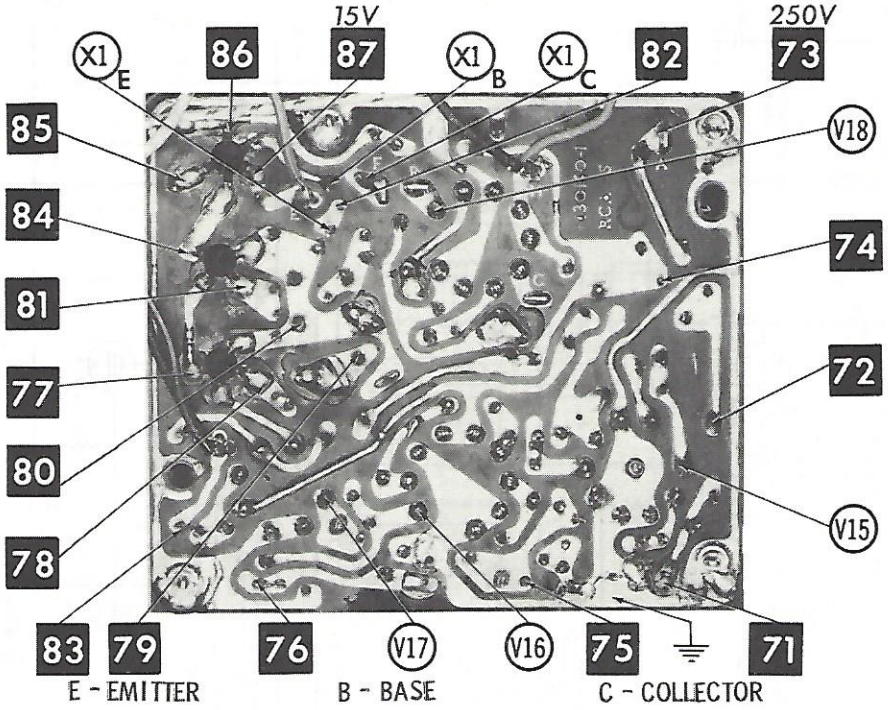

REMOTE CONTROL RECEIVER PRINTED BOARD

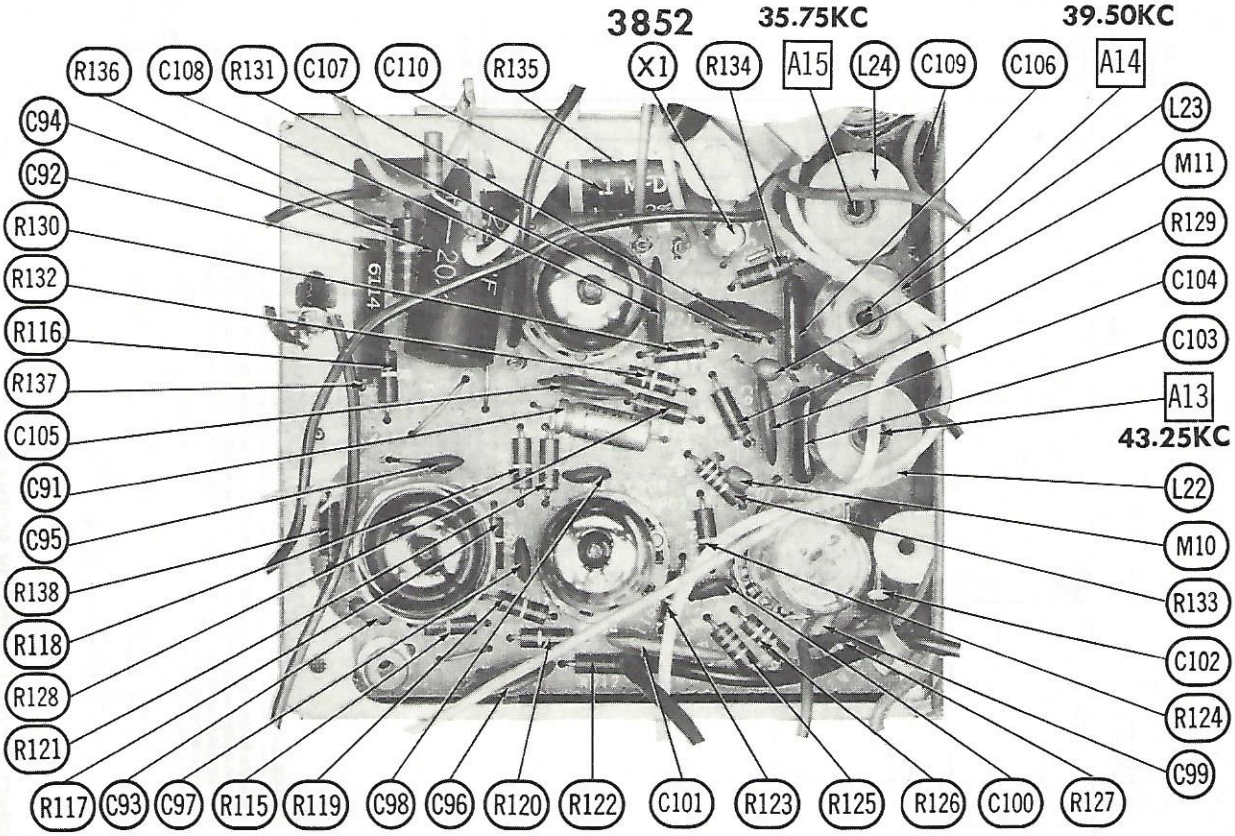

REMOTE CONTROL RECEIVER PRINTED BOARD

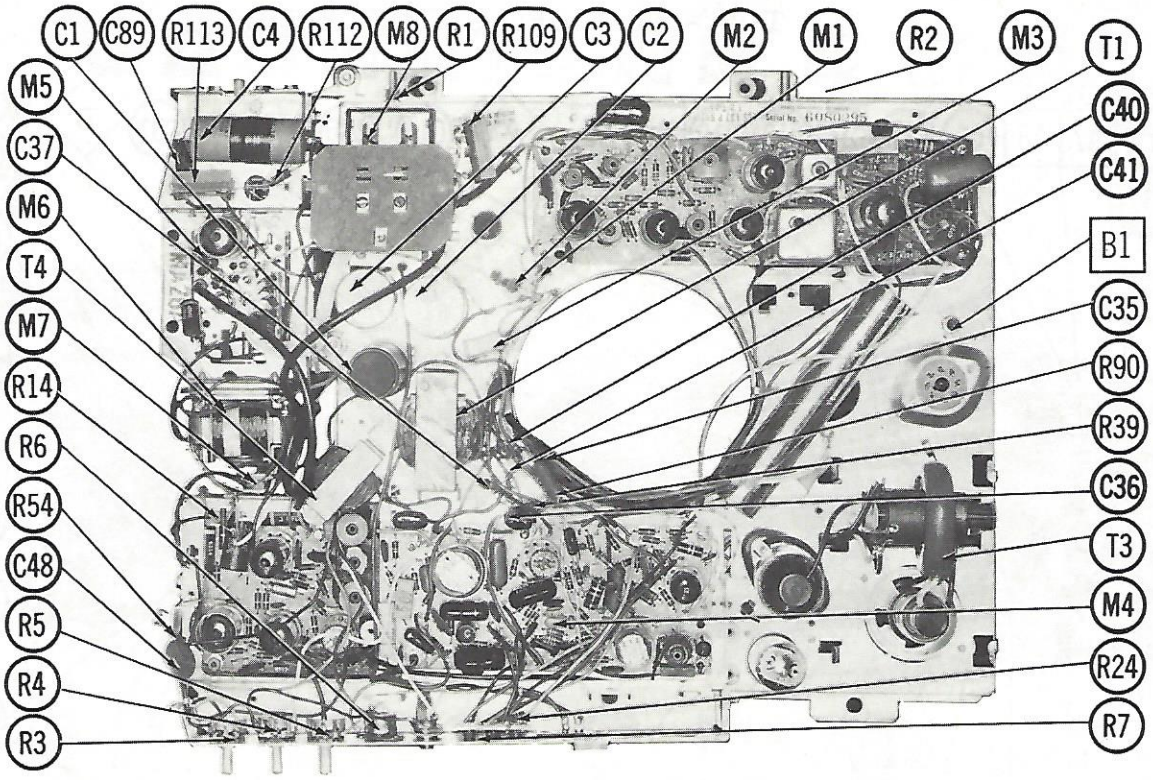

CHASSIS - REAR VIEW

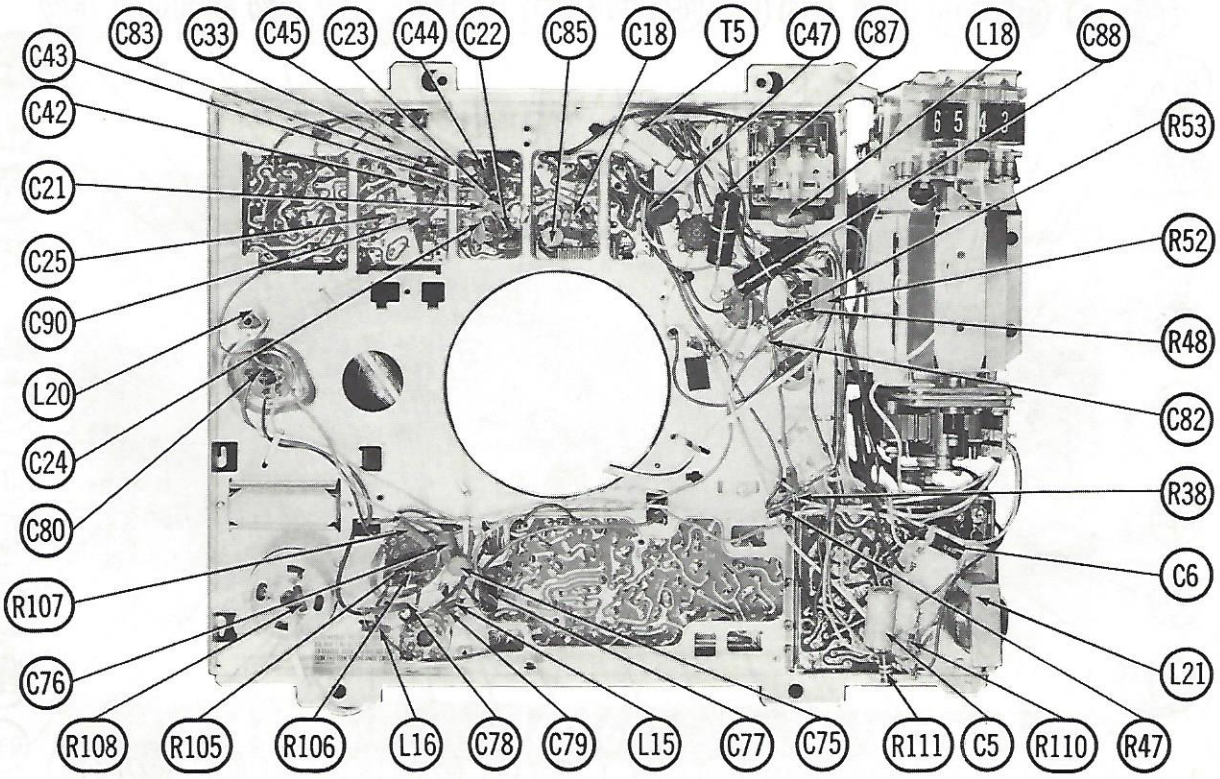

CHASSIS - FRONT VIEW

TP1 105V 1ST VIDEO IF PLATE TP2 0V 3RD VIDEO IF GRID
TP3 -.6V VIDEO OUTPUT GRID

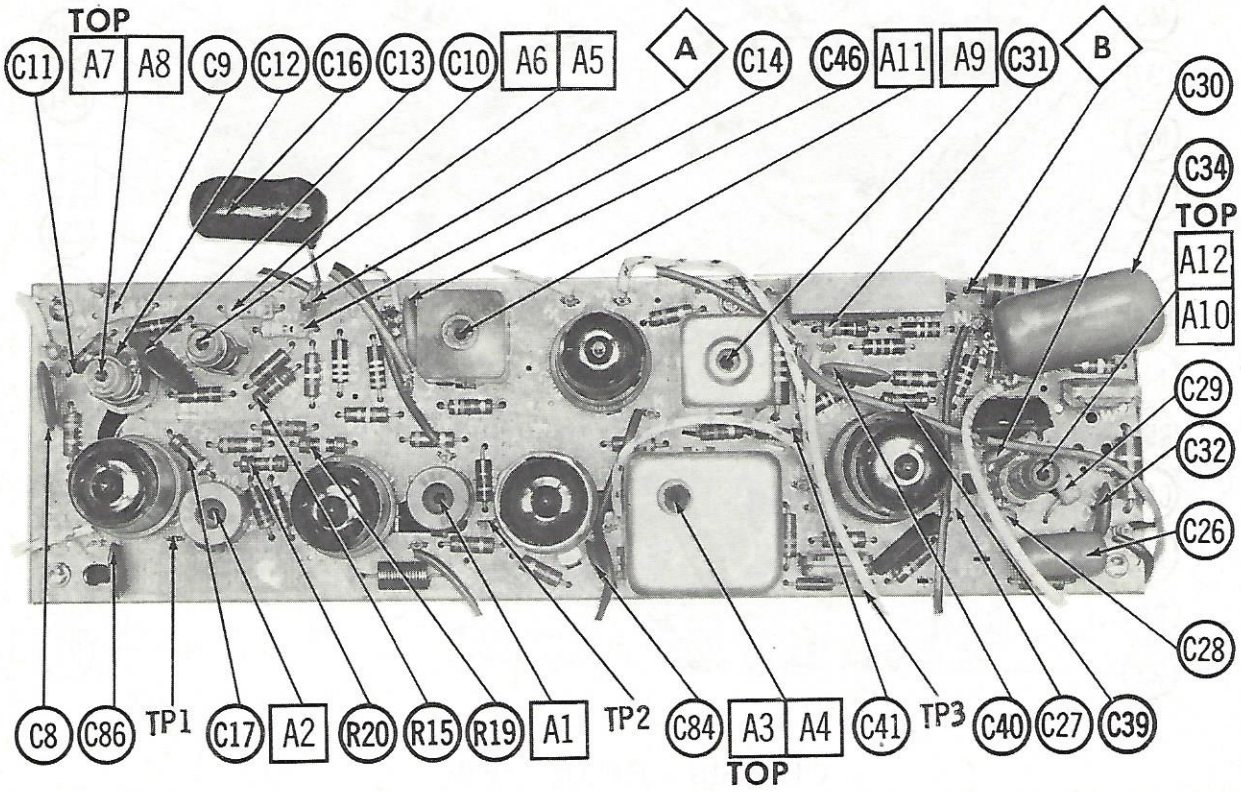

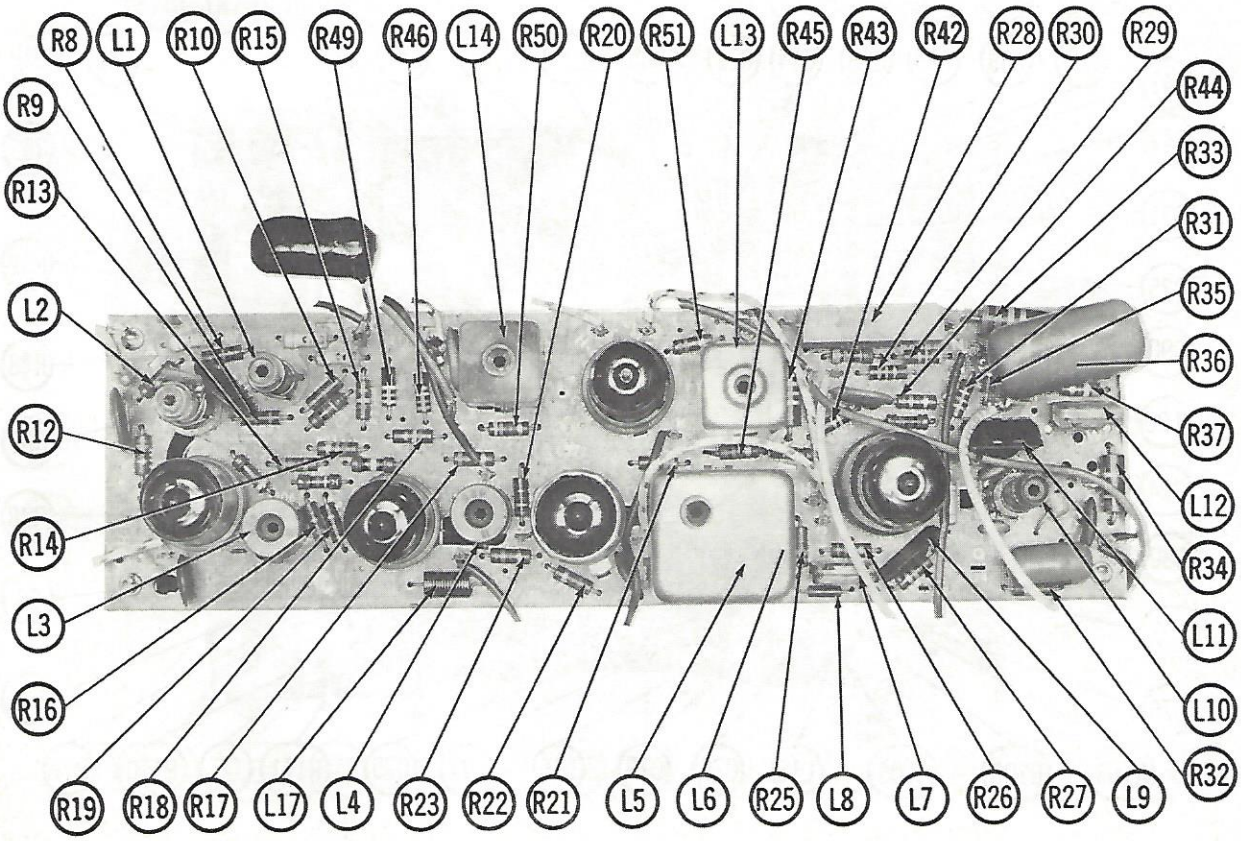

VIDEO, SOUND PRINTED BOARD

TV ALIGNMENT INSTRUCTIONS (cont)

SOUND IF ALIGNMENT

Connect the negative lead of a 10 volt bias supply to point Ⓐ. Positive to chassis.
Set Contrast Control fully clockwise.

	SIGNAL GENERATOR COUPLING	SIGNAL GENERATOR FREQUENCY	CHANNEL	CONNECT VTVM	ADJUST	REMARKS
12.	High side thru .001mfd to TP-3. Low side to chassis.	4.5MC (Unmod.)	Any non-interfering channel	DC probe thru diode probe (Fig. 6) to pin 7 (grid 3) of Audio Det. Low side to chassis.	A9, A10	Adjust for maximum negative voltage on meter. Attenuate generator output for a reading between 1.0 to 1.5 volts on meter when finally peaked. Peak A9 with maximum core separation. Adjust A10 for maximum deflection.

13. Remove VTVM and diode probe. Connect scope across Volume Control. Turn off signal generator and tune in the strongest TV station in the area and adjust Volume Control for normal volume. Preset coil slug A11 even with top of coil form. While observing scope and listening to sound, adjust A11 clockwise to a peak. Continue turning clockwise to a second louder peak and adjust for maximum on second peak.

4.5MC TRAP ALIGNMENT

Set Contrast Control fully clockwise.

	SIGNAL GENERATOR COUPLING	SIGNAL GENERATOR FREQUENCY	CHANNEL	CONNECT SCOPE	ADJUST	REMARKS
14.	High side thru .01mfd to TP-3. Low side to chassis.	4.5MC (400∿ Mod.)	Any non-interfering channel	Vert. Amp. thru demodulator probe to cathode of picture tube Low side to chassis.	A12	Adjust for MINIMUM 400∿ indication on scope.

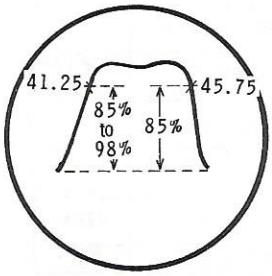

FIG.1

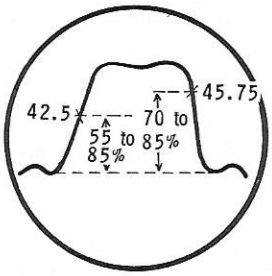

FIG.2

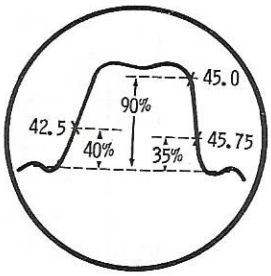

FIG.3

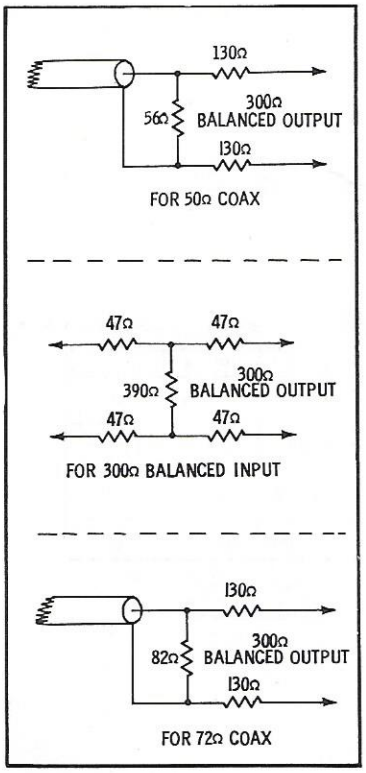

FIG.5

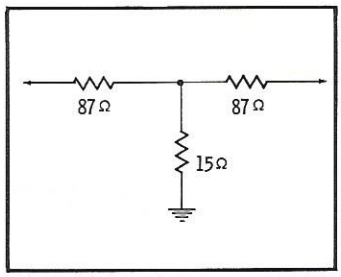

FIG. 4

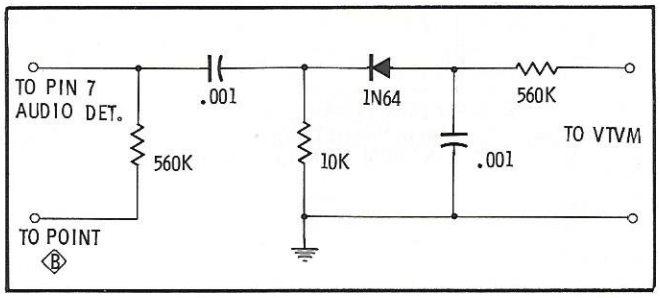

FIG. 6

RESISTANCE MEASUREMENTS

TV

ITEM	TUBE	Pin 1	Pin 2	Pin 3	Pin 4	Pin 5	Pin 6	Pin 7	Pin 8	Pin 9
V1	4BZ6	1.8meg	56Ω	8.5Ω	10Ω	820Ω	▲830Ω	0Ω		
V2	5GM6	15K	▲12Ω	10Ω	11.5Ω	†1900Ω	†1900Ω	100K		
V3	5EW6	.1Ω	150Ω	11.5Ω	13Ω	†5200Ω	†5200Ω	0Ω		
V4	10HF8	270Ω	100K	†47K	15.5Ω	13Ω	15Ω	3600Ω	†24K	†7000Ω
V5	6GY6	†30K	†10K	18.5Ω	17.5Ω	1.8meg	●†7000Ω	†180K		
V6	6GX6	14Ω	560Ω	15.5Ω	16.5Ω	†330K	†15K	470K		
V7	6AQ5A	NC	680Ω	17.5Ω	16.5Ω	†2600Ω	†2200Ω	0Ω		
V8	4AV6	8.5meg	0Ω	4Ω	5.5Ω	190K	190K	†40K		
V9	13EM7	● 700K	†335Ω	● 500Ω	●700K	‡2.7meg	190K	22Ω	18.5Ω	
V10	8FQ7	†50Ω	1.4meg	2200Ω	5.5Ω	8.5Ω	†80K	● 85K	70Ω	0Ω
V11	17GW6	TP	27Ω	TP	†8200Ω	950K	TP	24.5Ω	0Ω	TOP CAP ‡12Ω
V12	17DM4	NC	NC	¶ 8meg	NC	†50Ω	NC	22Ω	24.5Ω	
V13	1G3GT / 1B3GT	PINS 1 THRU 8 HAVE INFINITE RESISTANCE								TOP CAP ‡560Ω
V14	19AYP4	2.5Ω	27K	‡1.8meg	0Ω	NC	NC	● 160K	4Ω	
V201	2CW4	Pin 2 †14K	Pin 4 2.5meg	Pin 8 0Ω	Pin 10 0Ω	Pin 12 .5Ω				
V202	6CG8A	4700Ω	†9800Ω	0Ω	.5Ω	2.5Ω	†6100Ω	†5100Ω	0Ω	220K
ITEM	TUBE	Pin 1	Pin 2	Pin 3	Pin 4	Pin 5	Pin 6	Pin 7	Pin 8	Pin 9

● THIS READING WILL VARY, CONTROL SET FOR NORMAL OPERATION.
† MEASURED FROM OUTPUT OF M1.
‡ MEASURED FROM PIN 3 OF V12.
▲ MEASURED FROM PIN 7 OF V2.
NC NO CONNECTION TP TIE POINT

REMOTE CONTROL RECEIVER

ITEM	TUBE	Pin 1	Pin 2	Pin 3	Pin 4	Pin 5	Pin 6	Pin 7	Pin 8	Pin 9
V15	12AX7	†100K	100K	0Ω	FIL	FIL	†100K	900K	0Ω	FIL
V16	12AX7	†100K	100K	0Ω	FIL	FIL	†100K	900K	0Ω	FIL
V17	6AV6	68K	0Ω	FIL	FIL	470K	150K	†100K		
V18	12BH7	†15K	2.1meg	0Ω	FIL	FIL	†15K	2.1meg	0Ω	FIL

† MEASURED FROM OUTPUT OF M1.
TRANSISTOR CIRCUIT RESISTANCE FOR X1 NOT GIVEN BECAUSE OF THE WIDE VARIATION IN INTERNAL TRANSISTOR RESISTANCE.

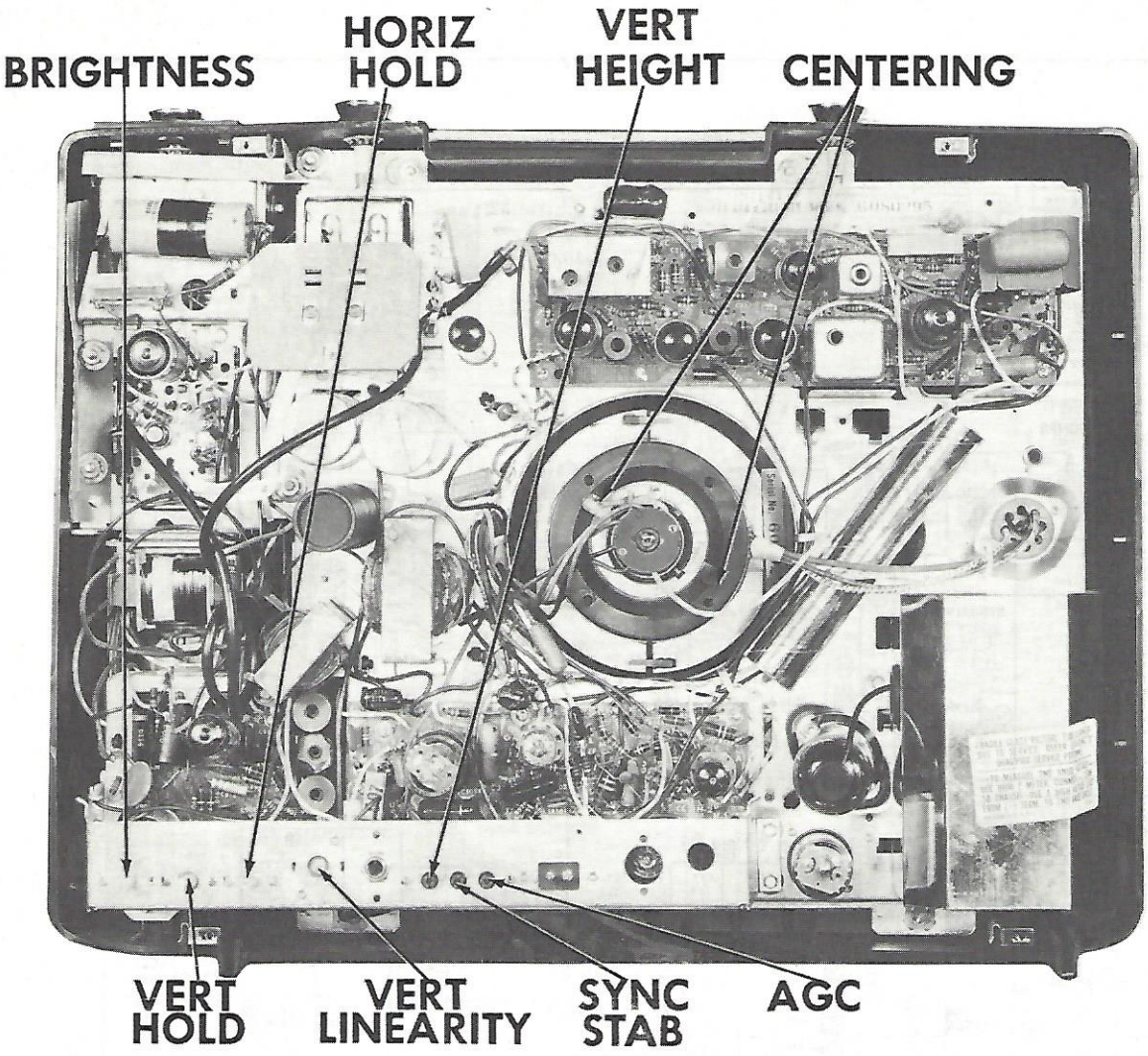

CABINET—REAR VIEW

HORIZONTAL SWEEP CIRCUIT ADJUSTMENTS

Suggested Alignment Tools:
GENERAL CEMENT #8282, 8606, 8606L, 9295, 9440
WALSCO #2526, 2543, 2544, 2545

CHECK OF THE HORIZONTAL OSCILLATOR ADJUSTMENT

Turn the Horizontal Hold fully clockwise. The picture should fall out of sync with approximately eight diagonal bars slanting down to the left. Turn the Hold counterclockwise slowly. The number of bars will gradually reduce and when only one and a half to three bars are obtained, the picture will pull into sync with only a slight additional counterclockwise turn of the Hold. Continue turning the Horizontal Hold counterclockwise until the picture falls out of sync. Rotation beyond fallout position should produce between 2 and 5 bars before interrupted oscillations (motorboat occurs). Interrupted oscillation should be reached before full counterclockwise rotation.

If the receiver passes this check and the picture is normal and stable, the Horizontal Oscillator is properly adjusted. Skip "Adjustment of the Horizontal Oscillator".

ADJUSTMENT OF HORIZONTAL OSCILLATOR

If in the above check the receiver failed to hold sync over twothirds turn of counterclockwise rotation of the Horizontal Hold from pull-in point, it will be necessary to make the following adjustments.

The Width Slug should be properly adjusted before attempting to adjust the Stabilizing Coil.

Set the Horizontal Stabilizing Coil Slug (B2) fully clockwise.

Adjustment of the Horizontal Hold in the counterclockwise direction will show a multiple number of bars before "motorboat" occurs. Adjust B2 until 3 bars are present before "motorboat" occurs, when the Horizontal Hold is rotated counterclockwise from the fallout point.

WIDTH ADJUSTMENT

Turn the set on and tune in a TV station, preferably with a test pattern. Adjust the Width Slug (B1) to fill the picture mask with a line voltage of 105 volts. With normal line voltage of 117 volts, adjust B1 for an overscan of approximately $\frac{1}{2}$ inch on each side of the screen. This adjustment should be made with the Brightness Control set at normal level.

DISASSEMBLY INSTRUCTIONS

CHASSIS REMOVAL MODEL 192A072RS

1. Remove 3 push-on type knobs on top of cabinet.
2. Remove rear cover (6 screws).
3. Remove 4 chassis mounting nuts and 2 chassis mounting bolts.
4. Disconnect yoke plug, picture tube socket, remote control receiver lead, speaker leads and high voltage lead.
5. Remove chassis.

PICTURE TUBE REMOVAL

It is necessary to remove the chassis for picture tube removal.