# SERVICE DATA

## 17" TELEVISION RECEIVERS

Model DV880

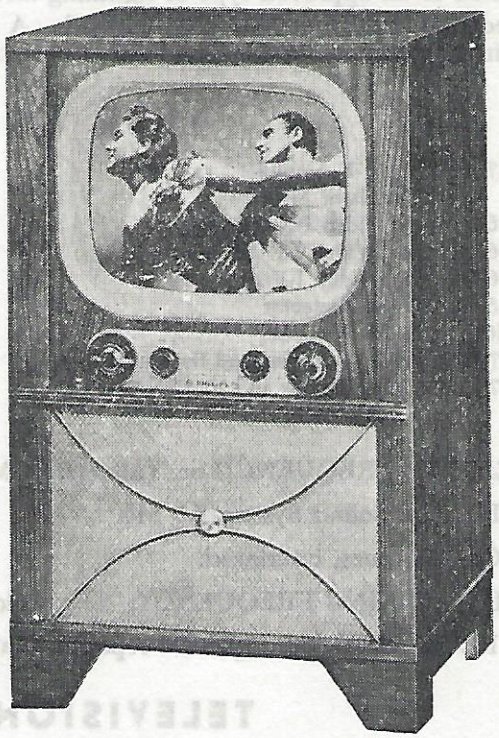

Model DV784

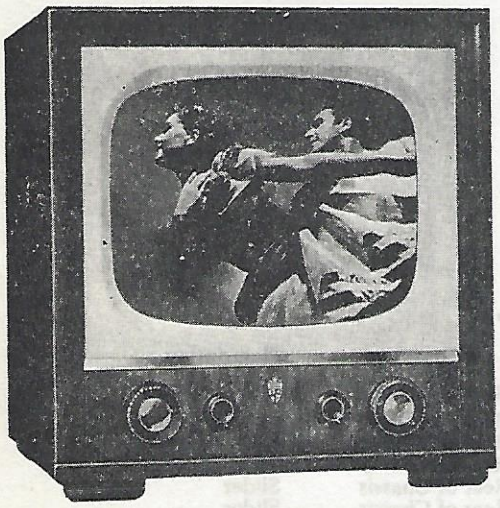

Model VR731

# GENERAL INFORMATION

Models DV880 and VR731 are table model 17 inch television receivers incorporating 19 tubes (including the picture tube). It is designed for operation on 115 volts, 25 or 60 cycle power.

Model DV784 is a console model television receiver using the same chassis as the DV880 receiver.

## TELEVISION ANTENNA CONNECTIONS

An antenna is built into the cabinet that is reasonably satisfactory for strong local signals in the absence of severe reflections. An external antenna using a 300 ohm transmission line may be connected to the antenna terminals.

To service this receiver satisfactorily a good external antenna installation is needed. Make certain the transmission line is as short as possible, has 300 ohms impedance and is kept clear of all surrounding objects, including the antenna mast itself, by at least 6 inches. Unless the signal strength in the area of operation is at least 1000 microvolts, it is advisable to use a type of transmission line having very low attenuation.

The antenna itself should be designed to offer a good match to the 300 ohm transmission line, either directly or by transformer coupling.

**Disconnect the built-in antenna when using the external antenna.**

For lightning protection, the antenna mast should be connected to a good ground, and the transmission line connected to an approved type of lightning arrestor, one terminal of which is grounded.

All electrical joints must be carefully made. A coating of glyptal on each joint exposed to the weather will assist in maintaining trouble-free performance over a long period of time.

## TUBE COMPLEMENT

| | | |
|---|---|---|
| V1 | 6BK7 | 1st R-F Amplifier |
| V2 | 6J6 | Oscillator Mixer |
| V101 | 6CB6 | 1st Video I-F Amplifier |
| V102 | 6CB6 | 2nd Video I-F Amplifier |
| V103 | 6CB6 | 3rd Video I-F Amplifier |
| V104 | 6AL5 | Video Detector |
| V105 | 6AH6 | Video Amplifier |
| V106 | 6SN7GT | Sync. Amplifier and Separator |
| V107 | 6SN7GT | Sync. Clipper and Vertical Oscillator |
| V108 | 6S4 | Vertical Amplifier |
| V109 | 6AU6 | Sound I-F Amplifier |
| V110 | 6AL5 | F-M Sound Detector |
| V111 | 6AT6 | 1st Audio Amplifier |
| V112 | 6AQ5 | Audio Output |
| V115 | 6SN7GT | Horizontal Oscillator |
| V116 | 6AU5GT | Horizontal Amplifier |
| V117 | 6AX4GT | Booster Damper Diode |
| V118 | 1B3GT | H.V. Rectifier |
| V119 | 17HP4 | 17" Picture Tube |

INTERMEDIATE FREQUENCIES: Video 26.25 Mc; Sound 21.75 Mc.

INTERCARRIER: Sound System 4.5 Mc.

SCANNING: 525 Lines, interlaced.

VERTICAL SCANNING FREQUENCY: 60 c (field frequency).

FRAME FREQUENCY: 30 c (picture repetition rate).

## TELEVISION CONTROLS

| Function | Location | Description |
|---|---|---|
| Contrast | Front Panel, Outer Shaft | Dual Knob |
| Off-Volume | Front Panel, Inner Shaft | Dual Knob |
| Tone | Front Panel, Outer Shaft | Dual Knob |
| Brilliance | Front Panel, Inner Shaft | Dual Knob |
| Horizontal Hold | Front Panel, Outer Shaft | Dual Knob |
| Vertical Hold | Front Panel, Inner Shaft | Dual Knob |
| Fine Tuning | Front Panel, Outer Shaft | Dual Knob |
| Channel Selector | Front Panel, Inner Shaft | Dual Knob |
| Local, Suburban, Fringe Switch | Rear of Chassis | Knob |
| Vertical Linearity | Rear of Chassis | Slotted Stud |
| Height | Rear of Chassis | Slotted Stud |
| Horizontal Range | Rear of Chassis | Slotted Core |
| Horizontal Drive | Rear of Chassis | Slotted Stud |
| Horizontal Linearity | Rear of Chassis | Slider |
| Horizontal Width | Rear of Chassis | Slider |
| Focus | Rear of Chassis | Slotted Stud |
| Reflection Yoke Adjustment | On Yoke Assembly | Thumb Screw |
| Centering Rings | On Neck of Tube | Adjustable Rings |
| Ion Trap Magnet | On Neck of Tube | Magnet and Clamp |

## HIGH VOLTAGE WARNING

Operation of the receiver chassis outside of the cabinet involves a shock hazard. An interlock in the line cord disconnects the power when the cover of the high voltage unit is removed. The high voltage supply, while of a low current capacity, operates at a 15,000 volt potential. Exercise all normal HIGH VOLTAGE precautions while working on this equipment.

## PICTURE TUBE HANDLING WARNING

The picture tube envelope encloses a high vacuum and with the large surface area of glass involved, the stresses created are considerable. Any accidental blow or rough handling may cause the tube to implode with extreme violence. The picture tube should be handled only by qualified persons protected by heavy gloves and shatterproof goggles.

## SERVICE ADJUSTMENTS

The service adjustments normally will require an occasional minor adjustment if any circuit work or tube replacement is required. A test pattern, generated either locally in the shop or obtained from a television station, is recommended for best results. The operating and auxiliary controls located on the front panel should be set for as good a pattern as possible before making the following adjustments.

If the picture is not properly centered remove the back cover and adjust the rings on th centering device, which is located on the neck of the tube, until the picture is recentered. If proper centering cannot be restored in this manner a slight readjustment of the deflection yoke mounting may be necessary. To obtain a clear sharply defined picture adjust the focus control.

Adjust the height and width controls so that the picture fills out the dimensions of the screen. A slight readjustment of the centering device may then be necessary.

The horizontal drive is adjusted by advancing the adjustment to a point where a vertical white line appears in the pattern and then backing it off just beyond the point where the white line disappears.

Adjust the horizontal linearity and vertical linearity adjustments for a symmetrical pattern. A slight readjustment of the height and width controls may then be necessary.

NOTE—The sequence of "non-operating" control adjustments outlined is suggested as a convenient method of approach and not an arbitrary procedure. Variations of the procedure are permitted to obtain the final result.

## TO REMOVE THE CHASSIS FROM THE CABINET

1. Remove the knobs on the front by pulling in the forward direction.
2. Remove the screws holding the back cover and set aside the cover.
3. Remove the speaker plug at the chassis.
4. Remove the leads from the built-in antenna at the terminals on the chassis.
5. Removal of the chassis may now be completed by removing the five chassis mounting bolts.

## REMOVING THE PICTURE TUBE

1. Remove the chassis from the cabinet by following the above procedure.
2. Disconnect the anode contact (PL-104) from the side of the picture tube and insure the discharge of the high voltage filter condenser by grounding this lead to the chassis.
3. Disconnect the tube socket from the base of the tube.
4. Slip the ion trap magnet from the neck of the tube.
5. Slip the centering device from the neck of the tube.
6. Remove the radiation shield (braid) from the cone of the tube.
7. Remove the mounting strap at the front rim of the tube.
8. Loosen the four rear support adjusting screws. Raise the front of the tube just far enough to clear the two stop pads on the front of the picture tube mounting brackets and slip the tube forward until the neck is clear of the deflection yoke assembly.

CAUTION: If the tube fails to slip out smoothly investigate and remove the cause of the trouble. DO NOT USE FORCE.

## INSTALLING AND ADJUSTING THE PICTURE TUBE

1. Wrap the rubber strip around the front of the tube.
2. Position the tube so that the anode contact is located at the left side of the tube as viewed from the screen.
3. Slip the neck of the tube through the rubber collar and deflection yoke assembly, sealing the rubber strip on the two front mounting brackets. Make certain that the bottom face of the tube rests against the rubber stop pads and not against the metal brackets.
4. Place the mounting strap around the rubber strip and tighten firmly.
5. Move the rear support so that the rubber collar rests firmly against and supports the cone of the tube. Tighten the rear support adjustment screws.
6. Slip the centering device over the neck of the tube. Make certain adjusting rings are next to the deflection yoke.
7. Slip the ion trap magnet over the neck of the tube. The red dot should be uppermost with the magnet on the left side looking at the rear of the tube.
8. Replace the radiation shield (braid) assembly.
9. Connect the picture tube socket and anode connector.
10. Turn the receiver on and allow a few minutes for warm up.
11. Advance the brilliance control and set the ion trap magnet for maximum raster brilliance, backing off the brilliance control as the maximum point is approached. The ion trap magnet must be rotated about the axis of the tube as well as shifted along the neck in order to obtain the proper setting. With the brilliance control set slightly above normal brilliance and the contrast control full counterclockwise, adjust the focus control until the raster is sharply defined. Readjust the brilliance control for normal brilliance and touch up the ion trap magnet setting.
12. Connect the antenna and tune in a test pattern.
13. Readjust the contrast control until the five different shades of gray are clearly distinguished on the test pattern.
14. Check the position and appearance of the test pattern. If it is off center or shadowed at the corners (electron beam striking the neck of the tube), adjust the rings on the centering device; adjust the focus control until a clear, sharply defined raster is obtained.
15. If the lines of the raster are not horizontal or square with the escutcheon, loosen the deflection yoke adjustment screw and rotate the deflection yoke until the proper condition is obtained. Tighten this adjustment.
16. Follow the procedure under Service Adjustments and make any minor adjustments of the focus control or deflection yoke necessary to obtain the desired result. The final adjustment of the focus control should leave the test pattern approximately centered. Check the position and appearance of the test pattern again and if it is off center or shadowed at the corners (electron beam striking the neck of the tube) adjust the centering control. Reset the focus control if necessary.

## ADJUSTMENT OF DEFLECTION YOKE TRIMMER C180

The yoke balancing trimmer C180 is connected in parallel with the horizontal deflection balancing capacitor C139 and for safety precautions is located inside the H.V. unit. Adjusting this trimmer eliminates wiggle of the horizontal sweep lines which may appear at the left side of the picture of some receivers. The wiggle may be defined as a sine wave dirtortion of the trace line, the amplitude of the wave varying from zero up to ¼ inch. The effect is stationary and can be easily detected on the test pattern. Refer to diagram on page 8.

This condition is the effect of unbalanced distributed capacity of the deflection yokes. If the two deflection coils of the yoke are not exactly identical, the unbalanced distributed capacity has to be balanced by the addition of a variable trimmer, C180. As the range of C180 is limited, the balance is influenced by the tolerance variations of the yoke capacitor C139.

## ADJUSTMENT OF THE HIGH VOLTAGE ON THE PICTURE TUBE ANODE

The second anode potential should be slightly less than 15,000 volts on a receiver that is functioning properly. Since the high voltage is obtained from the horizontal output transformer, the service adjustments must be made, or known to be in proper adjustment, before a high voltage measurement will have any meaning.

Improper operation of the horizontal sweep circuit or circuit faults in the high voltage filter will generally account for an abnormal anode potential. If the anode potential is low, check the HORIZONTAL DRIVE adjustment outlined under Service Adjustments.

# CAUTION HIGH VOLTAGE

**DO NOT USE HAND-HELD FLEXIBLE TEST LEADS WHEN MAKING THE FOLLOWING MEASUREMENT. KEEP THE HANDS CLEAR OF THE CIRCUIT DURING MEASUREMENT. AN 11 TO 15 KV. POTENTIAL EXISTS IN THIS CIRCUIT. EXERCISE ALL NORMAL HIGH VOLTAGE PRECAUTIONS.**

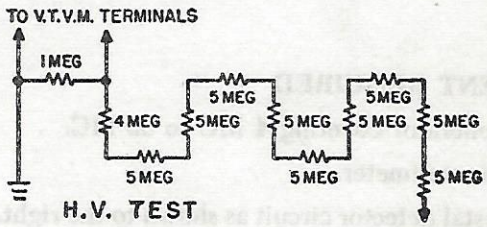


To measure the second anode potential, set the CONTRAST and BRIGHTNESS controls at minimum. With the controls in this position, the resistance of the test circuit will simulate the load presented to the high voltage power supply of the picture tube. Connect a test circuit as shown. Make the resistor string self-supporting and allow adequate clearance between the resistors and chassis parts to prevent high voltage breakdown. A meter scale of 0 to 500 volts should be used. Observe the reading on the meter scale and multiply this reading by 50 to obtain the voltage across the circuit. As an example, if the V.T.V.M. reads 260 volts, the potential is 260 x 50 or 13,000 volts.

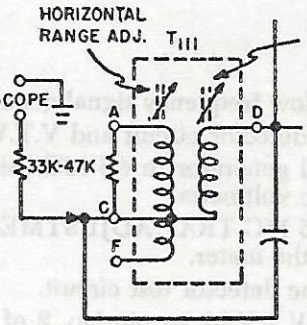


OSCILLOSCOPE CONNECTION FOR HORIZONTAL OSCILLATOR ALIGNMENT

## HORIZONTAL OSCILLATOR ALIGNMENT

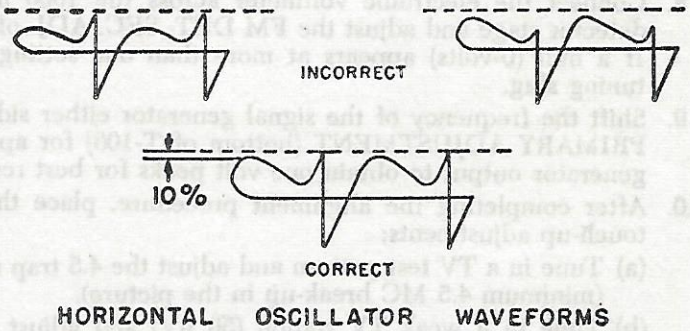


HORIZONTAL OSCILLATOR WAVEFORMS

If the Horizontal Hold control on the front panel fails to restore synchronization the Horizontal Range adjustment should be reset.

1. Tune in a weak signal. (If a weak signal is not available attenuate the available signal to approximately 50 uV at the input.)
2. Turn the Horizontal Hold control to the extreme clockwise position.
3. Adjust the Horizontal Range adjustment until a large vertical bar appears at the extreme left side of the tube. Then turn in the Horizontal Range adjustment until the Vertical bar just barely disappears to the left of the tube.
4. Check the action of the Horizontal Hold control on all active channels. Repeat the above steps if necessary to maintain stable synchronization.

**Note:** If the above procedure fails to restore stable synchronization, a waveform adjustment may be made with the aid of an oscilloscope as follows:

5. Connect the oscilloscope as shown in oscilloscope connection diagram. Adjust the Tertiary Waveform adjustment T-111 (underside) until the sine wave is 10% less in amplitude than the peak of the sawtooth (waveform-diagrams), while maintaining the picture in synchronization with the Horizontal range adjustment.

**Note:** This adjustment is very important for correct operation of the circuit. If the broad peak of the wave on the oscilloscope is much lower than the sharp peak, the noise immunity becomes poorer, the stabilizing effort of the tuned circuit is reduced and drift of the oscillator becomes more serious. On the other hand, if the broad peak is higher than the sharp peak, the oscillator is overstabilized, the pull-in range becomes inadequate and the broad peak can cause double triggering of the oscillator when the hold control approaches the clockwise position.

6. Remove the oscilloscope and repeat step Nos. 1, 2, and 3, if necessary.
7. Check the action of the Horizontal Hold control and repeat above steps as required to provide positive synchronization on all channels.

# FM SOUND CHANNEL ALIGNMENT

EQUIPMENT REQUIRED

Signal generator covering 4 MC to 30 MC.

Electronic voltmeter.

IN34 crystal detector circuit as shown to the right.

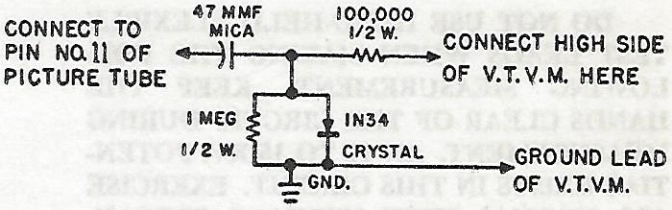


SOUND ALIGNMENT
TEST CIRCUIT

## PROCEDURE

1. Connect the low frequency signal generator output, through a .005 capacitor, across the IF test terminals.
2. Connect the detector circuit and V.T.V.M. as shown in the sound alignment circuit.
3. Set the signal generator to 4.5 MC using just enough output to give approximately one volt reading at the electronic voltmeter.
4. Adjust the 4.5 MC TRAP ADJUSTMENT located on the under side of the chassis for minimum voltage as shown on the meter.
5. Disconnect the detector test circuit.
6. Connect the V.T.V.M. to pin No. 2 of the 6AL5 FM DETECTOR tube (V110).
7. Adjust the LIMITER GRID adjustment (L106) and the primary of T-108 (bottom adjustment) for maximum indication on the voltmeter.
8. Connect the electronic voltmeter across the 1000 mmf condenser (C130) at the output of the FM detector stage and adjust the FM DET. SEC. ADJ. of the FM detector transformer (T-108) for the null. If a null (0-volts) appears at more than one setting use the position nearest to the top limit of the tuning slug.
9. Shift the frequency of the signal generator either side of 4.5 MC and touch up the FM DETECTOR PRIMARY ADJUSTMENT (bottom of T-108) for approximately equal peaks. Use just enough signal generator output to obtain one volt peaks for best results.
10. After completing the alignment procedure, place the receiver in operation and make the following touch-up adjustments:
    (a) Tune in a TV test pattern and adjust the 4.5 trap adjustment for maximum vertical wedge definition (minimum 4.5 MC break-up in the picture).
    (b) Tune in a weak TV station (50 uV) and adjust the limiter grid adjustment (L-106) and the FM DETECTOR SECONDARY ADJUSTMENT (T-108) for maximum sound and best noise rejection.

**Note:** These adjustments should be a very small amount, otherwise complete realignment may be necessary.

## IF AMPLIFIER ALIGNMENT USING A 20-30 MC SIGNAL GENERATOR AND A V.T.V.M.

1. Place a tight-fitting shield over the osc./mixer tube (V-2) and connect the ungrounded RF lead from the signal generator to the shield. This shield should not be grounded.
2. Connect the V.T.V.M. to test term. "A" (See alignment location diagram).
3. Use just enough signal generator output to maintain a 2-volt level at the V.T.V.M.
4. Set the signal generator to 21.75 MC and adjust the 21.75 MC sound trap (bottom slug of T-103) for a minimum voltage at the V.T.V.M.
5. Set the signal generator to 24.5 MC, hold the channel selector between channels and adjust L-113 for maximum V.T.V.M. reading. Return the channel selector to its normal position, shunt the 4700 ohm grid resistor of V-101 with a 1000 ohm resistor and adjust L-9 for maximum V.T.V.M. reading.
6. All other IF adjustments are made to give maximum indications on the V.T.V.M. at the frequencies designated in the alignment location diagram and on the schematic diagram.

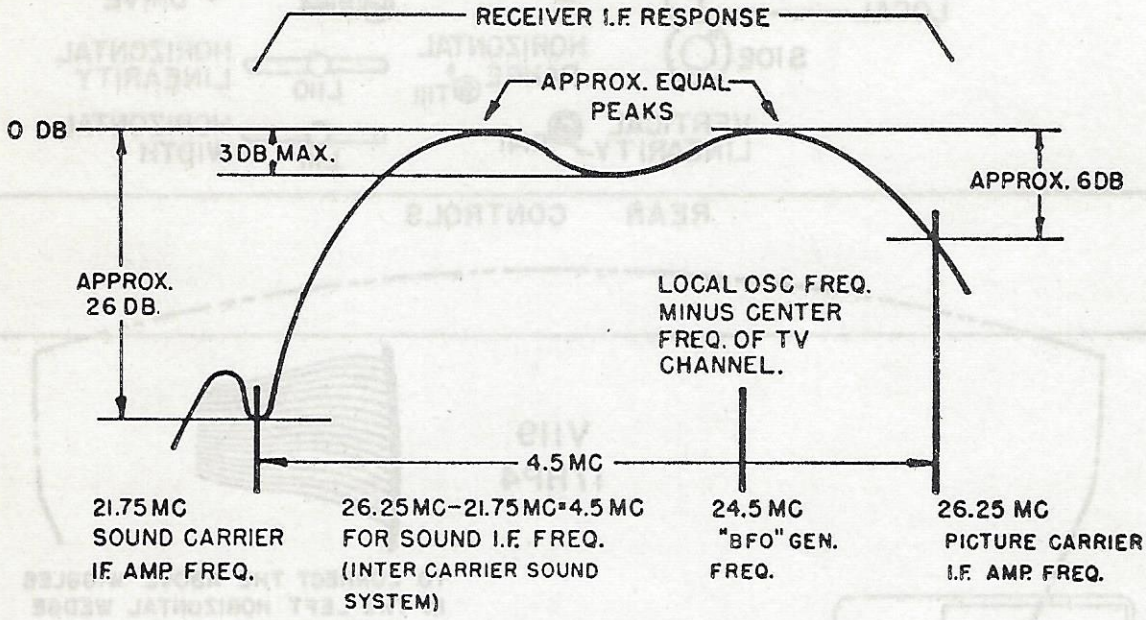


IF AMPLIFIER RESPONSE.

## IF AMPLIFIER ALIGNMENT CHART

| Signal Generator Frequency (No Modulation) | Adjustment (Refer to alignment location diagram) | Stage Adjusted |
|---|---|---|
| 24.5 MC | L113 and L9 24.5 MC IF Adj. | 1st IF Amplifier |
| 25.6 MC | T102 25.6 MC IF Adj. | 2nd IF Amplifier |
| 22.9 MC | T103 22.9 MC IF Adj. Top | 3rd IF Amplifier |
| 24.5 MC | T104 24.5 MC IF Adj. | Video Detector |
| 21.75 MC | T103 21.75 MC Sound Bottom Trap Adj. | Sound Trap Adj. (Adj. for Min. Voltage) |

**NOTE:** After adjusting the 21.75 MC Sound Trap recheck the setting of the 3rd IF Transformer (Top of T-103).

7. Check the i-f amplifier frequency response by tuning the signal generator from 21 MC through 26.25 MC and observing the change in d-c voltage at the electronic voltmeter. If the signal generator output is set for an electronic voltmeter reading of 1.5 volts at the peak i-f amplifier response, the d-c voltage should not drop below one volt between the two peaks normally obtained with this i-f amplifier. If the response is unsatisfactory, repeat the procedure or try slight modifications on the recommended settings to obtain the desired response. Avoid resonating the coils with the iron core at the bottom end of the coil form (Adjustment screw near limit of its travel). If a sweep type signal generator and oscilloscope are available the problem of making the final adjustments will be much easier. Check the two carrier i-f responses, 21.75 MC and 26.25 MC. The 21.75 MC response will be approximately 26 db below the peak response (approx. .075 volts) and the 26.25 MC response will fall approximately 6 db below the peak (approx. 0.75 volts).

The average i-f amplifier sensitivity, when feeding the signal generator output through the receiver as described in step 2, will run approx. 500 to 1000 microvolts for the one volt d-c peak measured at resistor R-116. (Receiver's oscillator operating on any vacant channel.)

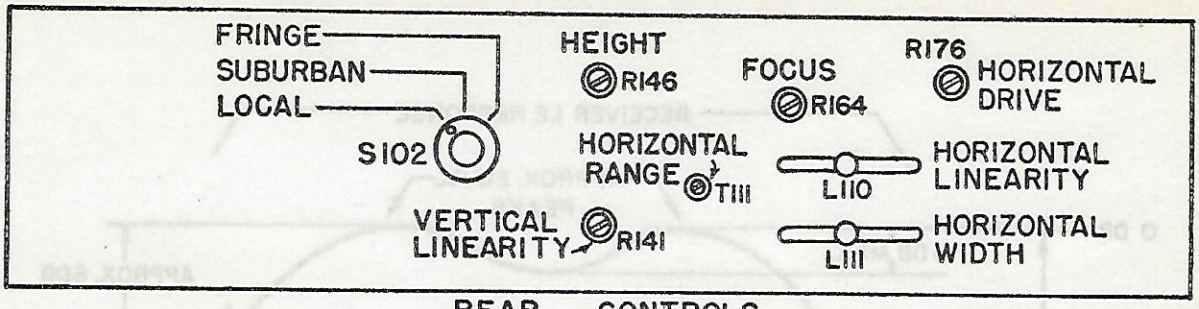


REAR CONTROLS

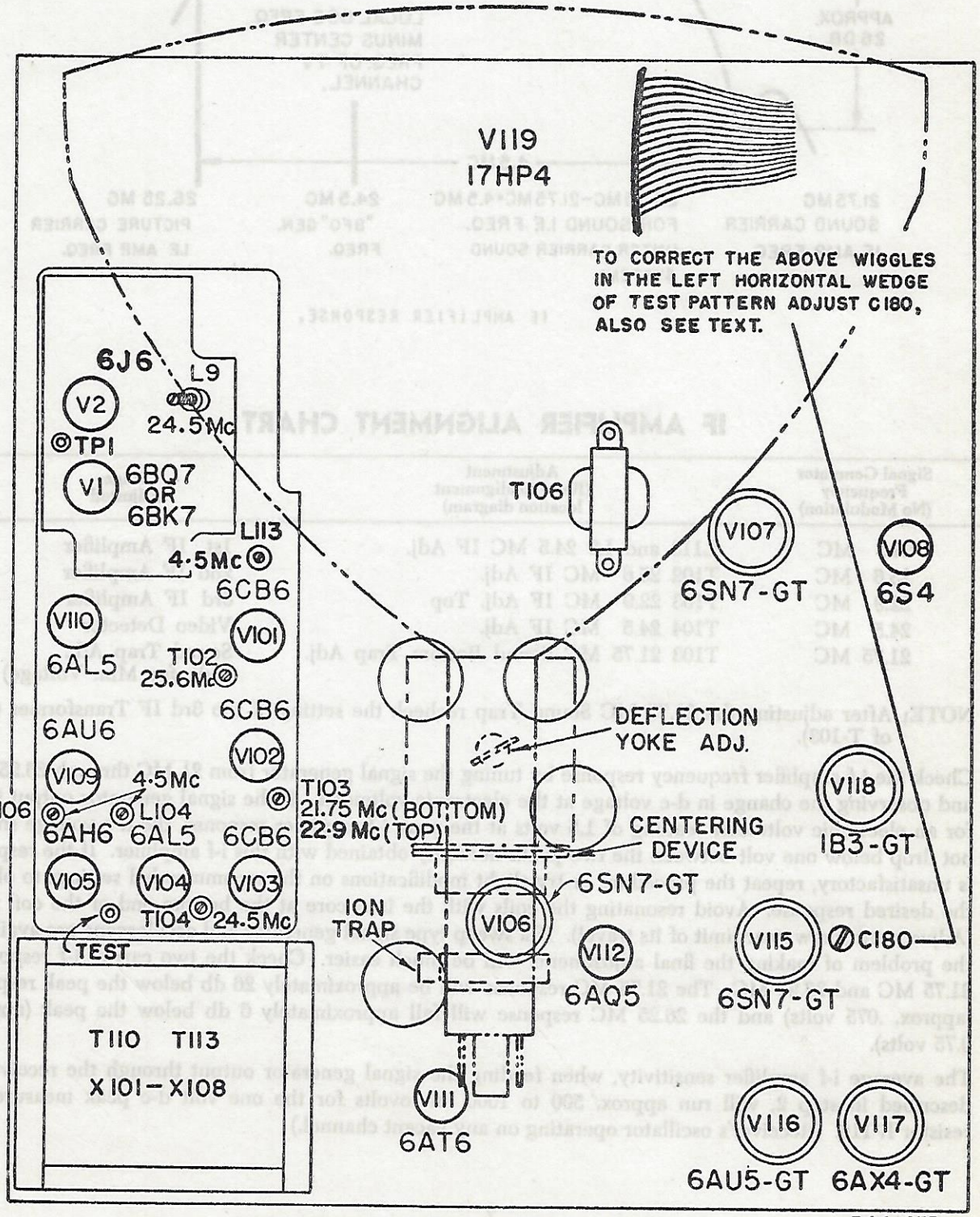


344-235

ALIGNMENT POINTS AND TUBE LOCATION

# REPLACEMENT PARTS

FOR DEPENDABLE REPAIRS USE ONLY GENUINE REPLACEMENT PARTS

When ordering always state model number of receiver and description and part number of part

## CAPACITORS

| No. | Value | Rating | Description | Part No. |
|---|---|---|---|---|
| C1 | 2.2 uuf | 500V | Ceramic | Part of RF Tuner 130-138 |
| C2 | 3-9 uuf | | Trimmer | |
| C3 | 800 uuf | 500V | Disc Special | |
| C4 | 120 uuf | 500V | Ceramic | |
| C5 | .5-3 uuf | | Trimmer | |
| C6 | 1000 uuf | 500V | Ceramic | |
| C7 | 10 uuf | 500V | Ceramic | |
| C8 | 100 uuf | 500V | Ceramic | |
| C9 | 20 uuf | 500V | Ceramic | |
| C10 | | | Fine Tuning | |
| C11 | .5-3 uuf | | Trimmer | |
| C12 | .5-3 uuf | | Trimmer | |
| C13 | 1000 uuf | 500V | Ceramic | |
| C14 | 10 uuf | 500V | Ceramic | |
| C15 | 300 uuf | 500V | Ceramic | |
| C16 | 5000 uuf | 500V | Disc Ceramic | |
| C17-C20 | 800 uuf | | Feed Through Capacitors | |
| C101 | 5000 uuf | 500V | Ceramic Disc | 514-011 |
| C102 | 5000 uuf | 500V | Ceramic Disc | 514-011 |
| C103 | 5000 uuf | 500V | Ceramic Disc | 514-011 |
| C104 | 5000 uuf | 500V | Ceramic Disc | 514-011 |
| C105 | 68 uuf | 500V | Ceramic—Part of T103 | 514-314 |
| C106 | 5000 uuf | 500V | Ceramic Disc | 514-011 |
| C107 | 5000 uuf | 500V | Ceramic Disc | 514-011 |
| C108 | 10 uuf° | 500V | Ceramic | 514-304 |
| C109 | .1 uf | 100V | Tubular | 515-175 |
| C110 | .5 uf | 50V | Tubular | 515-018 |
| C111 | 10 uf | 450V | Electrolytic | 516-039 |
| C112 | 2.2 uuf | 500V | Ceramic | 517-973 |
| C113 | 47 uuf | 500V | Ceramic—Part of L104 | 514-312 |
| C114 | 220 uuf° | 500V | Mica | 512-429 |
| C115 | .0047 uf | 600V | Tubular | 515-559 |
| C116 | .047 uuf | 200V | Tubular | 515-471 |
| C117 | 1000 uuf | 500V | Ceramic | 514-378 |
| C118A | 10 uf | 450V | Dual Electrolytic | 516-545 |
| C118B | 10 uf | 450V | | |
| C119 | 120 uuf° | 500V | Mica | 512-426 |
| C120 | .47 uf | 200V | Tubular | 515-483 |
| C121 | 5000 uuf | 500V | Ceramic Disc | 514-011 |
| C122 | 1000 uuf | 500V | Ceramic | 514-378 |
| C123 | 6800 uuf° | 300V | Mica | 512-447 |
| C124 | .01 uf | 600V | Tubular | 515-563 |
| C125 | .047 uf | 600V | Tubular | 515-571 |
| C126A | 75 uf | 50V | Triple Electrolytic | 516-543 |
| C126B | 60 uf | 450V | | |
| C126C | 40 uf | 450V | | |
| C127 | .1 uf | 600V | Tubular | 515-575 |
| C128 | 47 uuf | 500V | Ceramic—Part of L106 | 514-312 |
| C129A | 4000 uuf | 500V | Dual Ceramic | 514-020 |
| C129B | 4000 uuf | 500V | | |
| C130 | 1000 uuf | 500V | Ceramic | 514-378 |
| C131 | .01 uf | 600V | Tubular | 515-563 |
| C132 | 5 uf | 50V | Electrolytic | 516-055 |
| C133 | 330 uuf° | 500V | Ceramic | 514-322 |
| C134 | .01 uf | 500V | Disc Ceramic | 514-016 |
| C135A | 20 uf | 25V | 4 Section Electrolytic | 516-544 |
| C135B | 40 uf | 450V | | |
| C135C | 40 uf | 250V | | |
| C135D | 40 uf | 250V | | |
| C136 | .0047 uf | 600V | Tubular | 515-559 |
| C137 | .1 uf | 200V | Tubular | 515-475 |
| C138 | .01 uf | 600V | Tubular | 515-563 |
| C139 | 56 uuf | 500V | Mica—On Deflection Yoke | 514-313 |
| C140 | 2200 uuf | 500V | Ceramic | 514-382 |
| C141 | .01 uf | 500V | Dual Disc Ceramic | 514-021 |
| C142 | .01 uf | 500V | | |
| C143 | .047 uf | 600V | Tubular | 515-571 |
| C144 | .47 uf | 200V | Tubular | 515-483 |
| C145 | .022 uf | 600V | Tubular | 515-567 |
| C146 | .047 uf | 600V | Tubular | 515-571 |
| C147 | 330 uuf° | 500V | Mica | 512-431 |
| C148 | .01 uf | 400V | Tubular—Moulded | 515-513 |
| C149 | 33 uuf° | 500V | Ceramic | 514-110 |
| C150 | 82 uuf° | 500V | Mica | 512-424 |
| C151 | 82 uuf° | 500V | Mica | 512-424 |
| C152 | 820 uuf° | 500V | Mica | 512-436 |
| C153 | 4700 uuf | 500V | Mica | 512-077 |
| C154 | 5 uf | 50V | Electrolytic | 516-055 |
| C155 | .047 uf | 600V | Tubular | 517-571 |
| C156 | 180 uuf° | 500V | Ceramic | 514-119 |
| C157 | .047 uf | 600V | Tubular | 515-571 |
| C158 | .047 uf | 600V | Tubular | 515-571 |
| C159 | 5000 uuf | 500V | Disc Ceramic | 514-011 |
| C160 | 8 uf | 475V | Electrolytic | 516-052 |
| C161 | .1 uf | 600V | Tubular | 515-575 |
| C162 | 500 uuf | 20,000V | High Voltage Type | 519-020 |
| C163 | 5000 uuf | 500V | Ceramic | 514-011 |
| C164 | 5000 uuf | 500V | Ceramic | 514-011 |
| C165A | 50 uf | 350V | Dual Electrolytic | 516-542 |
| C165B | 50 uf | 350V | | |
| C166 | 100 uf | 450V | Electrolytic | 516-523 |
| C167 | 5 uuf | 500V | Ceramic | 517-952 |
| C168 | .0033 uf | 600V | Tubular | 515-557 |
| C169 | 10 uuf° | 500V | Ceramic | 514-304 |
| C170 | .01 uf | 600V | Tubular | 515-563 |
| C171 | 270 uuf° | 500V | Ceramic | 514-121 |
| C172 | .01 uf | 200V | Tubular | 515-463 |
| C173 | .0056 uuf | 600V | Tubular | 515-560 |
| C174 | .1 uf | 100V | Tubular | 515-175 |
| C175 | 5000 uuf | 500V | Disc Ceramic | 514-011 |
| C176 | .047 uf | 200V | Tubular | 515-471 |
| C177 | 5000 uuf | 500V | Disc Ceramic | 514-011 |
| C178 | 5000 uuf | 500V | Disc Ceramic | 514-011 |
| C179 | 1800 uuf° | 1000V | Mica | 512-078 |
| C180 | 7.5-50 uuf | | Padder | 511-056 |
| C181 | 10,000 uuf | 500V | Disc Ceramic | 514-016 |

## RESISTORS

| No. | Value | Rating | Description | Part No. |
|---|---|---|---|---|
| R1 | 22,000 ohms° | ½ w. | Part of RF Tuner | 130-138 |
| R2 | 47,000 ohms° | ½ w. | | |
| R3 | 220,000 ohms° | ½ w. | | |
| R4 | 220,000 ohms° | ½ w. | | |
| R5 | 1000 ohms° | ½ w. | | |
| R6 | 220,000 ohms° | ½ w. | | |
| R7 | 10,000 ohms° | ½ w. | | |
| R8 | 4700 ohms° | ½ w. | | |
| R9 | 10,000 ohms° | ½ w. | | |
| R10 | 10 ohms° | | | |
| R11 | 10,000 ohms° | | | |
| R101 | 4700 ohms° | ½ w. | | 501-633 |
| R102 | 100 ohms | ½ w. | | 501-713 |
| R103 | 150 ohms | ½ w. | | 501-715 |
| R104 | 47 ohms° | ½ w. | | 501-609 |
| R105 | 12,000 ohms° | ½ w. | | 501-638 |
| R106 | 150 ohms | ½ w. | | 501-715 |
| R107 | 47 ohms° | ½ w. | | 501-609 |
| R108 | 100 ohms | ½ w. | | 501-713 |
| R109 | 12,000 ohms° | ½ w. | | 501-637 |
| R110 | 100 ohms | ½ w. | | 501-713 |
| R111 | 100 ohms | ½ w. | | 501-713 |
| R112 | 150 ohms° | ½ w. | | 501-615 |
| R113 | 6800 ohms | ½ w. | Part of L101 | 070-219 |
| R114 | 2200 ohms | ½ w. | Part of L102 | 070-218 |
| R115 | 1 Megohm | ½ w. | | 501-761 |
| R116 | 3300 ohms° | ½ w. | | 501-631 |
| R117 | 1 Megohm | ½ w. | | 501-761 |
| R118 | 100 ohms° | ½ w. | | 501-613 |
| R119 | 2500 ohms | | Contrast Control | Part of 506-030 |
| R120 | 15,000 ohms° | ½ w. | Part of L103 | 070-220 |
| R121 | 2200 ohms | ½ w. | Part of L105 | 070-217 |
| R122 | 10,000 ohms° | ½ w. | | 501-637 |
| R123 | 470,000 ohms | ½ w. | | 501-757 |
| R124 | 2.2 Megohms | ½ w. | | 501-765 |
| R125 | 220,000 ohms° | ½ w. | | 501-653 |
| R126 | 12,000 ohms° | ½ w. | | 501-638 |
| R127 | 5600 ohms° | 2 w. | | 503-334 |
| R128 | 560,000 ohms° | ½ w. | | 501-658 |
| R129 | 2200 ohms° | ½ w. | | 501-629 |
| R130 | 22,000 ohms° | ½ w. | | 501-641 |
| R131 | 2200 ohms° | ½ w. | | 501-629 |
| R132 | 47,000 ohms° | ½ w. | | 501-645 |
| R133 | 15,000 ohms° | 2 w. | | 503-339 |
| R134 | 4700 ohms° | ½ w. | | 501-633 |
| R135 | 1500 ohms° | 1 w. | | 502-627 |
| R136 | 50,000 ohms | | Brightness Control | 506-031 |
| R137 | 10,000 ohms° | ½ w. | | 501-637 |
| R138 | 33,000 ohms° | ½ w. | | 501-643 |
| R139 | 820,000 ohms° | ½ w. | | 501-660 |
| R140 | 1 Megohm | | Vertical Hold Control | Part of 506-025 |
| R141 | 5000 ohms | | Vertical Linearity Control | 505-055 |
| R142 | 8200 ohms° | ½ w. | | 501-636 |
| R143 | 1 Megohm | 1 w. | | 502-761 |
| R144 | 1000 ohms° | 1 w. | | 502-625 |
| R145 | 1 Megohm | ½ w. | | 501-761 |
| R146 | 2.5 Megohms | | Height Control | 505-054 |
| R147 | 150 ohms° | ½ w. | | 501-615 |
| R148 | 22,000 ohms° | ½ w. | | 501-641 |
| R149 | 270 ohms° | ½ w. | | 501-618 |
| R150 | 33,000 ohms° | ½ w. | | 501-643 |
| R151 | 10,000 ohms° | ½ w. | | 501-807 |
| R152 | 10,000 ohms° | ½ w. | | 501-807 |
| R153 | 10 Megohms | ½ w. | | 501-773 |
| R154 | 1 Megohm | | Volume Control | Part of 506-030 |
| R155 | 270 ohms° | 1 w. | | 502-618 |

# REPLACEMENT PARTS — Continued

## RESISTORS

| | | | | |
|---|---|---|---|---|
| R156 | 100 ohms | ½ w. | | 501-713 |
| R157 | 100,00 ohms | ½ w. | | 501-749 |
| R158 | 100 ohms° | 5 w. | W.W. | 504-050 |
| R159 | 700,000 ohms | | Tone Control | Part of 506-031 |
| R160 | 560 ohms° | ½ w. | On Deflection Yoke | 501-622 |
| R161 | 1000 ohms° | ½ w. | On Deflection Yoke | 501-625 |
| R162 | 560 ohms° | ½ w. | On Deflection Yoke | 501-622 |
| R163 | 4700 ohms° | ½ w. | | 501-633 |
| R164 | 1 Megohm | | Focus Control | 505-062 |
| R165 | 3900 ohms° | ½ w. | | 501-632 |
| R166 | 120,000 ohms° | 1 w. | | 502-650 |
| R167 | 330,000 ohms° | ½ w. | | 501-655 |
| R168 | 820,000 ohms° | ½ w. | | 501-660 |
| R169 | 82,000 ohms° | 1 w. | | 502-648 |
| R170 | 330,000 ohms ±5% | 1 w. | | 502-019 |
| R171 | 50,000 ohms | | Horizontal Hold Control | Part of 506-025 |
| R172 | 68,000 ohms° | ½ w. | | 501-647 |
| R173 | 150,000 ohms° | ½ w. | | 501-651 |
| R174 | 10,000 ohms° | ½ w. | | 501-637 |
| R175 | 8200 ohms° | ½ w. | | 501-636 |
| R176 | 50,000 ohms | | Horizontal Drive Control | 505-057 |
| R177 | 330,000 ohms° | ½ w. | | 501-655 |
| R178 | 47,000 ohms° | 1 w. | | 502-645 |
| R179 | 470,000 ohms | ½ w. | | 501-757 |
| R180 | 47 ohms° | ½ w. | | 501-609 |
| R181 | 220 ohms ±5% | 3 w. | W.W. | 504-049 |
| R182 | 25,000 ohms° | ½ w. | | 501-646 |
| R183 | 2200 ohms° | 1 w. | | 502-629 |
| R184 | 3.3 ohms° | ½ w. | | 501-824 |
| R185 | 1 Megohm | 1 w. | | 502-761 |
| R186 | 150,000 ohms | ½ w. | | 501-751 |
| R187 | 680 ohms | ½ w. | | 501-723 |
| R188 | 39,000 ohms° | ½ w. | | 501-644 |
| R189 | 330,000 ohms | 1 w. | | 502-755 |
| R190 | 100,000 ohms | ½ w. | | 501-749 |
| R191 | 330,000 ohms | ½ w. | | 501-755 |
| R192 | 470,000 ohms | ½ w. | | 501-757 |
| R193 | 1200 ohms° | ½ w. | | 501-626 |
| R194 | 2200 ohms° | ½ w. | | 501-629 |
| R195 | 820,000 ohms° | ½ w. | | 501-660 |
| R196 | 820,000 ohms° | ½ w. | | 501-660 |
| R197 | 100,000 ohms | ½ w. | | 501-749 |
| R198 | 39,000 ohms° | ½ w. | | 501-644 |
| R199 | 68,000 ohms° | ½ w. | | 501-647 |
| R200 | 5.6 ohms° | ½ w. | | 501-827 |
| R201 | 150,000 ohms | ½ w. | | 501-751 |
| R202 | 3900 ohms° | ½ w. | | 501-632 |

° — Tolerance ±10%

## CAPACITOR-RESISTOR NETWORK

| | | | |
|---|---|---|---|
| CR101 | .002 uf | 450V | Vertical Integrating Network ..... 519-503 |
| | 2 X .005 uf | 450V | |
| | 22,000 ohms | 5 w. | |
| | 2 X 8200 ohms | 5 w. | |

## TRANSFORMERS AND COILS

| No. | Description | Part No. |
|---|---|---|
| L1, L2 | Antenna Coils | Part of R-F Tuner ..... 130-138 |
| L3, L4, L5 | Converter Coils | |
| L6 | Plate, Cathode Choke | |
| L7, L8 | Filament Chokes | |
| L9 | 24.5 Mc I-F Coil | |
| L10 | R-F Choke | |
| L101 | Video Peaking Coil | 070-219 |
| L102 | Video Peaking Coil | 070-218 |
| L103 | Video Peaking Coil | 070-220 |
| L104 | 4.5 Mc Trap Video Plate Adj. | 060-151 |
| L105 | Video Peaking Coil | 070-217 |
| L106 | 4.5 Mc Trap, Limiter Grid Adj. | 060-151 |
| L108 | Deflection Yoke | 060-167 |
| L110 | Horizontal Linearity Coil | 060-168 |
| L111 | Width Control Coil | 060-169 |
| L112 | Filament Choke | 060-157 |
| L113 | I-F Mixer Coil 24.5 Mc | 060-155 |
| L114 | Filter Choke | 050-192 |
| L115 | Filter Choke | 050-107 |
| L116 | Choke, Tweet Filter 15.5 uh | 060-170 |
| T102 | 1st I-F Transformer | 060-148 |
| T103 | 2nd I-F Transformer | 060-149 |
| T104 | 3rd I-F Transformer | 060-148 |
| T106 | Vertical Oscillator Transformer | 050-174 |
| T107 | Vertical Output Transformer | 050-176 |
| T108 | Ratio Detector Transformer | 060-146 |
| T109 | Audio Output Transformer | 050-196 |
| T110 | Power Transformer High Voltage | 050-183 |
| T111 | Horizontal Oscillator Transformer | 060-147 |
| T112 | Horizontal Output Transformer | 050-195 |
| T113 | Filament-Heater Transformer | 050-184 |

# VOLTAGE CHART

| TUBE DESIGNATION | PIN NUMBER 1 | 2 | 3 | 4 | 5 | 6 | 7 | 8 | 9 |
|---|---|---|---|---|---|---|---|---|---|
| V101 6CB6 | —.54 ° | .6 ° | H | H | 125 | 125 | — | — | — |
| V102 6CB6 | —.63 ° | .62 ° | H | H | 125 | 125 | — | — | — |
| V103 6CB6 | NR | 1.5 ° | H | H | 130 | 130 | — | — | — |
| V104 6AL5 | NR | —.56 ° | H | H | NR | — | —1.5 ° | — | — |
| V105 6AH6 | 5.2 ° | 9.5 ° | H | H | 200 | 255 | 9.5 ° | — | — |
| V106 6SN7 | — | 36 | 4 | — | 75 | — | H | H | — |
| V107 6SN7 | — | 115 | — | 36 | 100 | 36 | H | H | — |
| V108 6S4 | — | 33 | H | H | H | NR | — | — | 525 ° ° |
| V109 6AU6 | NR | — | H | H | 55 | 55 | .5 | — | — |
| V110 6AL5 | — | — | H | H | NR | — | NR | — | — |
| V111 6AT6 | —.7 ° | — | H | H | — | — | 65 | — | — |
| V112 6AQ5 | — | 12 | H | H | 230 | 250 | — | — | — |
| V115 6SN7 | —11 ° | 170 | 2 ° | —48 ° | 190 | — | H | H | — |
| V116 6AU5 | —12 ° | H | 22 | — | NR | — | H | 210 | — |
| V117 6AX4 | — | — | NR | — | 310 | — | H | H | — |
| V118 1B3 | TAKE NO MEASUREMENTS | | | | | | | | |
| V119 17HP4 | PIN 2 = 105 v ° ° PIN 6 Varies with setting of focus control. | | | PIN 10 = 525 v ° ° | | | PIN 11 = 120 v ° ° | | |

NR—Not Readable.

° ° —Brightness Control set for normal operation.

°—Measured with V.T.V.M.

Operating Voltages—All heaters 6.3 v.
B+ Low 130 v, B+ High 310 v.

All voltages are measured to chassis with 20,000 ohms per volt meter and are positive unless otherwise specified. Line voltage 117 v A.C.

Contrast and volume controls at minimum setting. Local distance switch S102 in local position. Zero input signal.

## MISCELLANEOUS ELECTRICAL PARTS

| Part No. | Description |
|---|---|
| 070-216 | Silver Vortex Antenna |
| 121-141 | Antenna Terminal Panel Assembly |
| 570-036 | C.R.T. Socket Assembly |
| 110-398 | C.R.T. Clamping Strap 17" |
| 303-270 | C.R.T. Rubber Cushion Strap |
| 301-477 | C.R.T. Radiation Shield Braid |
| 130-139 | Centering Device—Electrostatic |
| 121-133 | Deflection Yoke and Mounting Bracket |
| 060-167 | Deflection Yoke |
| 646-020 | Fuse ¼ amp. Slo-blo |
| 120-930 | H.V. Socket Assembly |
| 570-032 | H.V. Socket |
| 571-227 | H.V. Connector and Lead |
| 121-140 | H.V. Shield, Cover and Interlock Assembly |
| 130-140 | Ion Trap Magnet |

| Part No. | Description |
|---|---|
| 100-036 | Line Cord and Plug Interlock |
| 571-226 | Line Cord Receptacle |
| 130-126 | Rectifier 5P1, 150 m.a., 130 volts |
| 041-138 | Speaker 8" P.M. Table Model |
| 041-130 | Speaker 8" P.M. Console Model |
| 121-137 | Speaker and Cable Assembly, Table Model |
| 121-150 | Speaker and Cable Assembly, Console Model |
| 301-339 | Spring Clip Coil Guide |
| 310-052 | Spring for Radiation Shield |
| | Switch On-Off Part of R154 |
| 080-141 | Switch — Local — Suburban — Fringe |
| 130-138 | Standard Coil Tuner, Cascode |
| 570-001 | Tube Socket Octal |
| 570-031 | Tube Socket Octal Low Loss |
| 570-030 | Tube Socket 9 Pin Miniature, Low Loss |
| 570-009 | Tube Socket 7 Pin Miniature |

## CABINET PARTS FOR MODELS DV880 AND DV784

| Part No. | Description |
|---|---|
| 030-311 | Walnut Cabinet Table Model DV880 |
| 030-312 | Mahogany Cabinet Table Model DV880 |
| 030-313 | Blonde Cabinet Table Model DV880 |
| 030-357 | Walnut Cabinet Console Model DV784 |
| 030-358 | Mahogany Cabinet Console Model DV784 |
| 030-359 | Blonde Cabinet Console Model DV784 |
| 330-003 | Crest, Philips |
| 110-406 | Grille Strip and Medallion Assembly DV784 |
| 627-044 | Grille Cloth, 13" x 22", Dark, DV784 |
| 627-038 | Grille Cloth, 13" x 22", Light, DV784 |
| 121-139 | Cabinet Back Cover Assembly DV880 |
| 121-149 | Cabinet Back Cover Assembly DV784 |
| 350-135 | Knob Identification Moulding |

| Part No. | Description |
|---|---|
| 572-159 | Knob, Plain, Inner |
| 572-160 | Knob, Plain, Outer |
| 572-155 | Knob, Contrast |
| 572-156 | Knob, Off-On Volume |
| 572-157 | Knob, Channel Indicator |
| 572-158 | Knob, Fine Tuning |
| 332-654 | Knob Escutcheon DV784 |
| 572-203 | Knob, Local-Distance Switch |
| 332-655 | C.R.T. Escutcheon DV784 |
| 332-656 | C.R.T. Escutcheon Mask DV784 |
| 332-671 | C.R.T. Escutcheon Mask DV880 |
| 332-657 | C.R.T. Window DV784 |
| 332-672 | C.R.T. Window DV880 |

## CABINET PARTS FOR MODEL VR731

| | |
|---|---|
| 030-308 | Walnut Cabinet VR731 |
| 030-309 | Mahogany Cabinet VR731 |
| 030-310 | Blonde Cabinet VR731 |
| 330-061 | Crest, Rogers Majestic |
| 121-138 | Cabinet Back Cover Assembly |
| 350-135 | Knob Identification Moulding |
| 572-159 | Knob, Plain, Inner |
| 572-160 | Knob, Plain, Outer |
| 572-163 | Knob, Contrast |
| 572-162 | Knob, Off-On Volume |
| 572-164 | Knob, Channel Indicator |
| 572-165 | Knob, Fine Tuning |
| 572-203 | Knob, Local — Suburban — Fringe |
| 332-671 | C.R.T. Escutcheon Mask |
| 332-672 | C.R.T. Window |
| 310-253 | Shaft Adapter ¼" to ⅜" |
| 524-510 | Set Screw for Adapter |

|  |  |
|---|---|
| V | V1 V2 V109 V101 V110 V102 V111 V103 V112 |
| L | 1 2 6 7 3 4 5 114 8 116 9 10 11 106 113 102 103 112 |
| T | 110 108 102 103 104 |
| C | 174 3 4 5 17 6 18 7 8 9 14 16 15 18 101 102 103 104 163 106 107 164 16 |
| C | 19 1 2 181 20 10 11 12 13 118A 135B 115 114 116 |
| C | 141 142 174 166 165 126 135 112 128 129A 130 131 132 173 172 133 168 170 171 118A 136 |
| R | 1 2 3 4 5 101 6 8 10 7 11 9 101 102 103 104 105 108 107 109 110 106 111 112 196 |
| R | 135 158 122 124 123 12 |
| R | 189 186 148 147 149 150 188 151 152 154 159 153 191 192 15 |

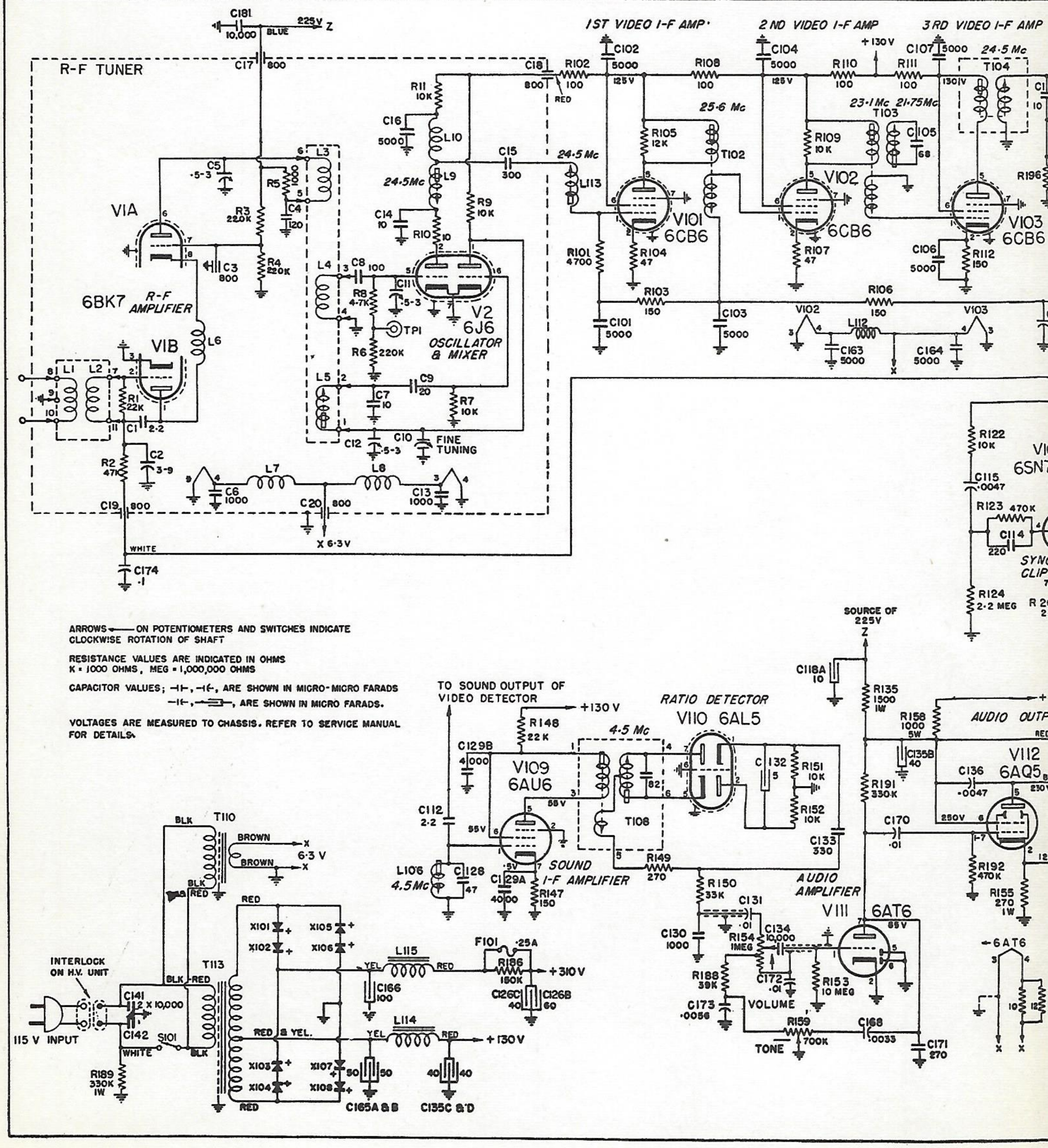

ARROWS ← ON POTENTIOMETERS AND SWITCHES INDICATE CLOCKWISE ROTATION OF SHAFT

RESISTANCE VALUES ARE INDICATED IN OHMS
K = 1000 OHMS, MEG = 1,000,000 OHMS

CAPACITOR VALUES; ⊣⊢, ⊣(, ARE SHOWN IN MICRO-MICRO FARADS
⊣(, ⊐, ARE SHOWN IN MICRO FARADS.

VOLTAGES ARE MEASURED TO CHASSIS. REFER TO SERVICE MANUAL FOR DETAILS.

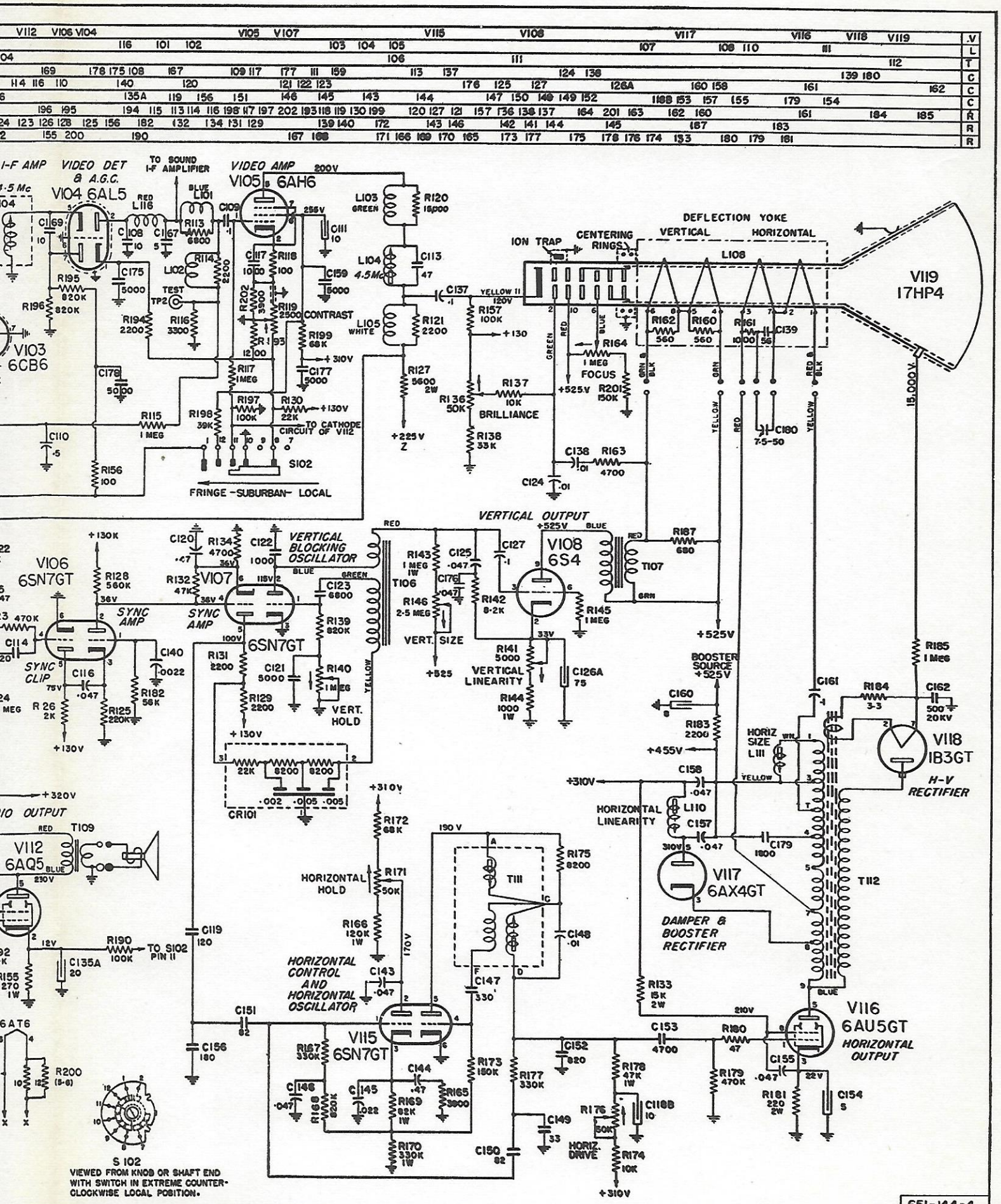
I-F AMP
VIDEO DET & A.G.C.
VIDEO AMP
TO SOUND I-F AMPLIFIER
V104 6AL5
V105 6AH6
V103 6CB6
V119 17HP4
DEFLECTION YOKE
VERTICAL
HORIZONTAL
ION TRAP
CENTERING RINGS
CONTRAST
FOCUS
BRILLIANCE
TO CATHODE CIRCUIT OF V112
S102
FRINGE-SUBURBAN-LOCAL
VERTICAL OUTPUT
V108 6S4
VERTICAL BLOCKING OSCILLATOR
V107 6SN7GT
V106 6SN7GT
SYNC AMP
SYNC CLIP
VERT. SIZE
VERT. HOLD
VERTICAL LINEARITY
CR101
V112 6AQ5
OUTPUT
TO S102 PIN 11
BOOSTER SOURCE +525V
HORIZ SIZE L111
HORIZONTAL LINEARITY
V118 1B3GT
H-V RECTIFIER
V117 6AX4GT
DAMPER & BOOSTER RECTIFIER
HORIZONTAL HOLD
HORIZONTAL CONTROL AND HORIZONTAL OSCILLATOR
V115 6SN7GT
V116 6AU5GT
HORIZONTAL OUTPUT
HORIZ. DRIVE
S 102
VIEWED FROM KNOB OR SHAFT END WITH SWITCH IN EXTREME COUNTER-CLOCKWISE LOCAL POSITION.
651-144-4

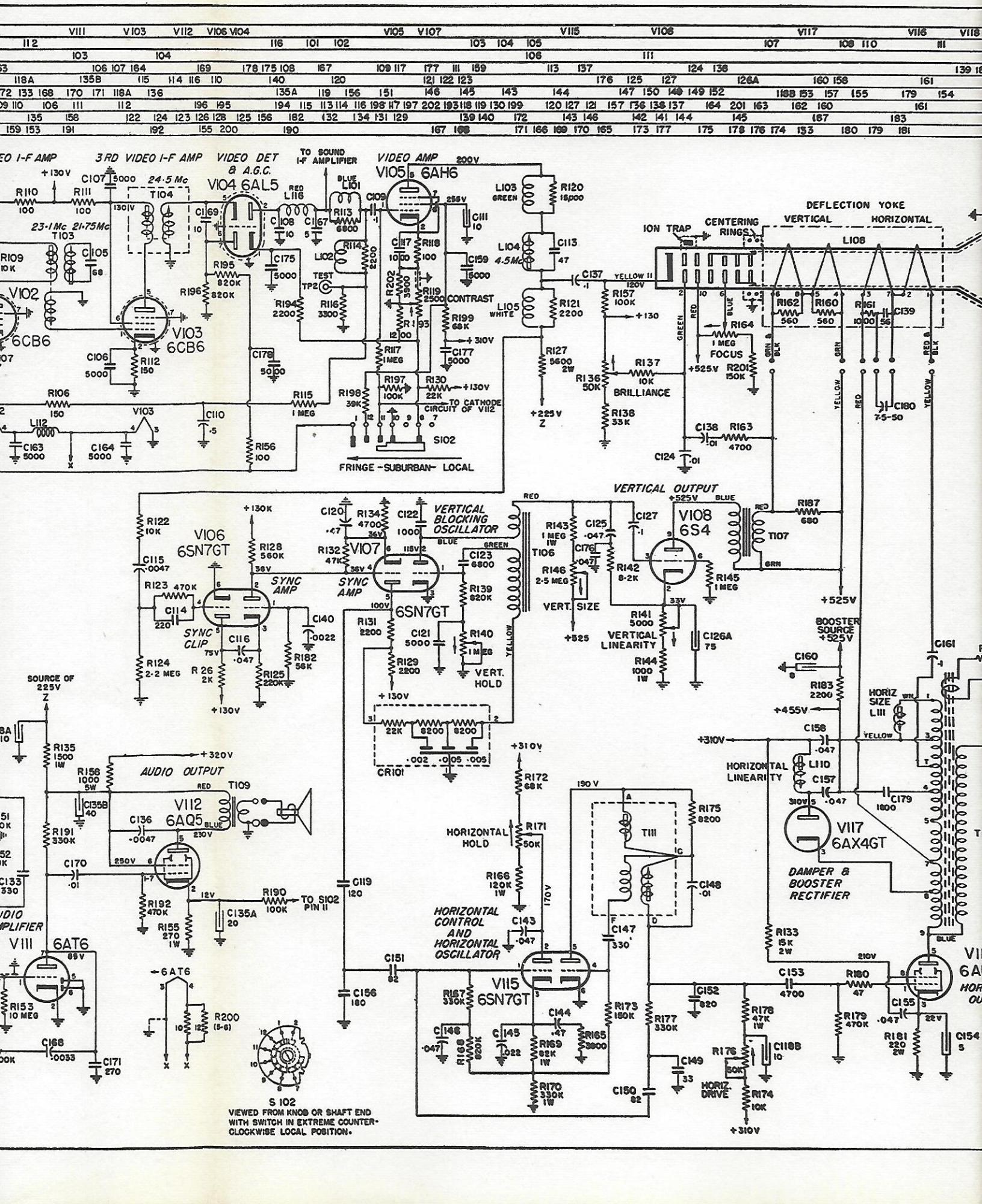
3RD VIDEO I-F AMP
VIDEO DET & A.G.C.
TO SOUND I-F AMPLIFIER
VIDEO AMP
V104 6AL5
V105 6AH6
V102 6CB6
V103 6CB6
T104
T103
L101
L102
L103
L104
L105
L108
L116
DEFLECTION YOKE
VERTICAL
HORIZONTAL
ION TRAP
CENTERING RINGS
CONTRAST
FOCUS
BRILLIANCE
S102
FRINGE - SUBURBAN - LOCAL
TO CATHODE CIRCUIT OF V112
VERTICAL BLOCKING OSCILLATOR
VERTICAL OUTPUT
V108 6S4
T107
T106
V106 6SN7GT
V107 6SN7GT
SYNC AMP
SYNC CLIP
VERT. SIZE
VERTICAL LINEARITY
VERT. HOLD
CR101
BOOSTER SOURCE +525V
HORIZ SIZE L111
HORIZONTAL LINEARITY
V117 6AX4GT
DAMPER & BOOSTER RECTIFIER
SOURCE OF 225V
AUDIO OUTPUT
T109
V112 6AQ5
V111 6AT6
HORIZONTAL HOLD
HORIZONTAL CONTROL AND HORIZONTAL OSCILLATOR
V115 6SN7GT
T111
HORIZ. DRIVE
S 102
VIEWED FROM KNOB OR SHAFT END WITH SWITCH IN EXTREME COUNTER-CLOCKWISE LOCAL POSITION.