SERVICE DATA

TELEVISION RECEIVERS (17" Screen)

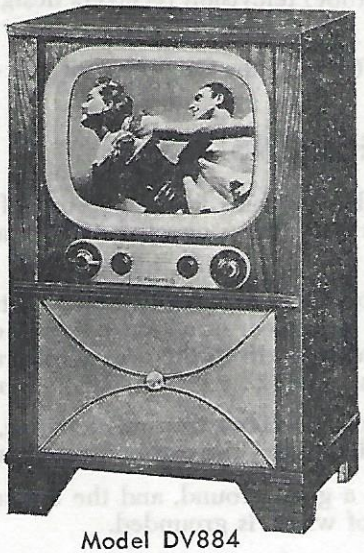

Model DV884

Model DV886

Model VR761

Model VR771

SERVICE DATA

TELEVISION RECEIVERS

Models DV884, DV886, VR761 and VR771

GENERAL INFORMATION

Models DV884 and VR761 are 21 tube (including the 17″ picture tube) television receivers designed for operation on 115 volts, 25 or 60 cycle power.

Models DV886 and VR771 are identical to the DV884 and VR761 with the exception of the cabinet which is equipped with doors.

TELEVISION ANTENNA CONNECTIONS

An antenna is built into the cabinet that is satisfactory for strong local signals in the absence of severe reflections. An external antenna using a 300 ohm transmission line may be connected to the antenna terminals.

To service this receiver satisfactorily a good external antenna installation is needed. Make certain the transmission line is as short as possible, has 300 ohms impedance and is kept clear of all surrounding objects, including the antenna mast itself, by at least 6 inches. Unless the signal strength in the area of operation is at least 1000 microvolts, it is advisable to use a type of transmission line having very low attenuation.

The antenna itself should be designed to offer a good match to the 300 ohm transmission line, either directly or by transformer coupling. **Disconnect the built-in antenna when using the external antenna.**

For lightning protection, the antenna mast should be connected to a good ground, and the transmission line connected to an approved type of lightning arrestor, one terminal of which is grounded.

All electrical joints must be carefully made. A coating of glyptal on each joint exposed to the weather will assist in maintaining trouble-free performance over a long period of time.

TUBE COMPLEMENT

V1	6BC5	1st RF Amplifier
V2	6J6	Oscillator Mixer
V101	6CB6	1st Video I-F Amplifier
V102	6CB6	2nd Video I-F Amplifier
V103	6CB6	3rd Video I-F Amplifier
V104	6AL5	Video Detector
V105	6CB6	Video Amplifier
V106	6SN7GT	Sync. Amp. and Separator
V107	6SN7GT	Sync. Clipper and Vertical Osc.
V108	6S4	Vertical Amplifier
V109	6AU6	Audio I-F Amplifier
V110	6AL5	FM Detector
V111	6AT6	1st Audio Amplifier
V112	6AQ5	Audio Output
V113	6AX5GT	LV Rectifier
V114	5U4G	LV Rectifier
V115	6SN7GT	Horizontal Oscillator
V116	6AU5	Horizontal Amplifier
V117	6W4GT	Damper
V118	1B3GT	HV Rectifier
V119	17BP4A	17″ Black Picture Tube

INTERMEDIATE FREQUENCIES: Video 26.25 Mc; Sound 21.75.

INTERCARRIER. Sound System 4.5 Mc.

SCANNING: 525 lines, interlaced.

VERTICAL SCANNING FREQUENCY: (Field Frequency): 60c.

FRAME FREQUENCY: 30c. (picture repetition rate).

TELEVISION CONTROLS

Function	Location	Description	Function	Location	Description
Contrast	Front Panel, Outer Shaft	Dual Knob	High Low Voltage	Rear of Chassis	Switch
Off-Volume	Front Panel, Inner Shaft		Height	Rear of Chassis	Slotted Stud
Tone	Front Panel, Outer Shaft	Dual Knob	Horizontal Range	Rear of Chassis	Slotted Core
Brightness	Front Panel, Inner Shaft		Horizontal Drive	Rear of Chassis	Slotted Stud
Horizontal Hold	Front Panel, Inner Shaft	Dual Knob	Horizontal Lock	Rear of Chassis	Slotted Core
Vertical Hold	Front Panel, Outer Shaft		Horizontal Linearity	Rear of Chassis	Slider
Fine Tuning	Front Panel, Outer Shaft	Dual Knob	Horizontal Width	Rear of Chassis	Slider
Channel Selector	Front Panel, Inner Shaft		Focus Control	On Yoke Assembly	Slotted Shaft
Vertical Linearity	Rear of Chassis	Slotted Stud	Centering Control	On Yoke Assembly	Shaft with Flat

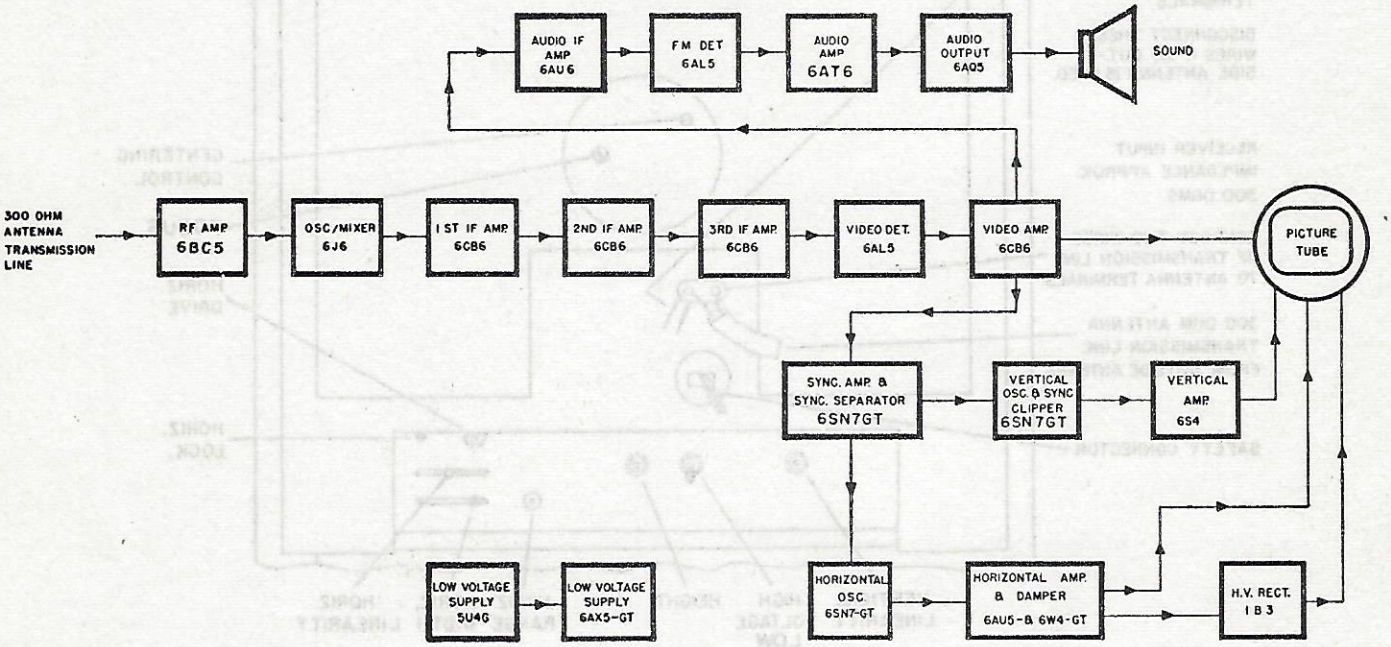

FUNCTIONAL BLOCK DIAGRAM

FREQUENCY CHART

Channel Selector Position No.	Frequency Range Mc.	Picture Carrier Frequency Mc.	Sound Carrier Frequency Mc.	Receiver R.F. Oscillator Freq. Mc.
2	54-60	55.25	59.75	81.5
3	60-66	61.25	65.75	87.5
4	66-72	67.25	71.75	93.5
5	76-82	77.25	81.75	103.5
6	82-88	83.25	87.75	109.5
7	174-180	175.25	179.75	201.5
8	180-186	181.25	185.75	207.5
9	186-192	187.25	191.75	213.5
10	192-198	193.25	197.75	219.5
11	198-204	199.25	203.75	225.5
12	204-210	205.25	209.75	231.5
13	210-216	211.25	215.75	237.5

HIGH VOLTAGE WARNING

Operation of the receiver chassis outside of the cabinet involves a shock hazard. An interlock in the line cord disconnects the power when the back cover is removed. The high voltage supply, while of low current capacity, operates at a 12,500 volt potential. Exercise all normal HIGH VOLTAGE precautions while working on this equipment.

SERVICE ADJUSTMENTS

The service adjustments normally will require an occasional minor adjustment if any circuit work or tube replacement is required. A test pattern, generated either locally in the shop or obtained from a television station is recommended for best results. The operating and auxiliary controls, located on the front panel, should be set for as good a pattern as possible before making the following adjustments.

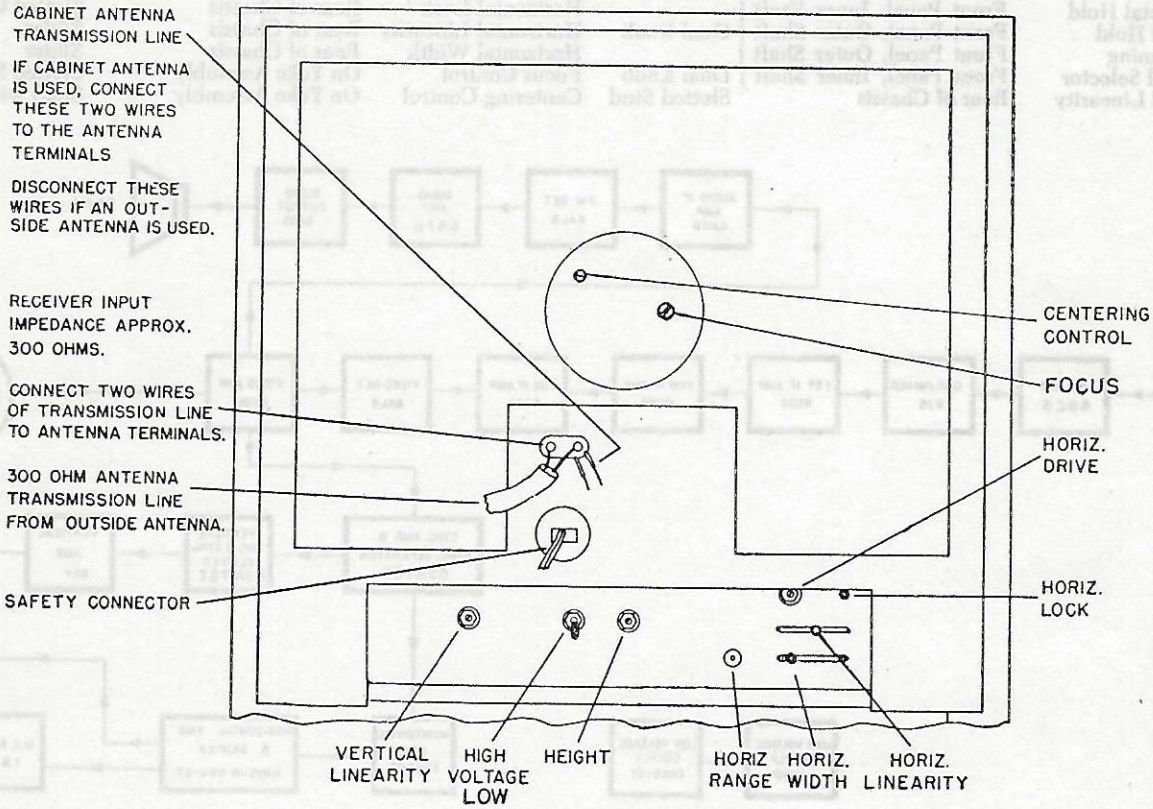

REAR VIEW

If the picture is not properly centered remove the back cover and move the centering control lever, which is located on the yoke assembly, a short distance in any direction required to recenter the picture. **Do not use undue force in making this adjustment as excessive strain may be exerted on the neck of the picture tube.** If proper centering cannot be restored in this manner a slight readjustment of the deflection yoke mounting may be necessary. To obtain a clear sharply defined picture adjust the slotted shaft of the FOCUS assembly.

Adjust the HEIGHT and WIDTH controls so that the picture fills out the dimensions of the screen. A slight readjustment of the CENTERING control may then be necessary.

The HORIZONTAL DRIVE is adjusted by advancing the adjustment to a point where a vertical white line appears in the pattern and then backing it off just beyond the point where the white line disappears.

Adjust the HORIZONTAL LINEARITY and VERTICAL LINEARITY adjustments for a symmetrical pattern. A slight readjustment of the HEIGHT and WIDTH controls may then be necessary.

Note — The sequence of "non-operating" control adjustments outlined is suggested as a convenient method of approach and not an arbitrary procedure. Variations of the procedure are permitted to obtain the final result.

WARNING

PICTURE TUBE HANDLING PRECAUTIONS — The picture tube envelope encloses a high vacuum and with the large surface area of glass involved, the stresses created are considerable. Any accidental blow or rough handling may cause the tube to implode with extreme violence. The picture tube should be handled only by qualified persons protected by heavy gloves and shatterproof goggles.

TO REMOVE THE CHASSIS FROM THE CABINET

1. Remove the knobs on the front panel by pulling in the forward direction. Insert a No. 8 Allen wrench through the hole in the contrast knob to loosen the screw holding the knob.
2. Unscrew the fastening bolt located directly above the AC cord insert.
3. Remove the screws holding the cabinet back. The back cover may then be set aside.
4. Remove the speaker and power unit plug at the chassis.
5. Remove the leads from the built-in antenna at the terminals on the chassis.
6. Removal of the chassis may now be completed by removing the five chassis mounting bolts.

REMOVING THE PICTURE TUBE

1. Remove the chassis from the cabinet by following the above procedure.
2. Disconnect the ANODE CONTACT (PL-104) from the side of the tube and insure the discharge of the high voltage filter condenser by grounding this lead to the chassis.
3. Disconnect the tube socket from the base of the tube.
4. Slip the ION TRAP from the neck of the tube.
5. Remove the MOUNTING STRAP at the front rim of the tube.
6. Loosen the four REAR SUPPORT ADJUSTMENT SCREWS. Raise the front of the tube just far enough to clear the two stop pads on the front of the picture tube mounting brackets and slip the tube forward until the neck is clear of the DEFLECTION YOKE and FOCUS MAGNET ASSEMBLY.
   Caution: If the tube fails to slip out smoothly, investigate and remove the cause of trouble. **DO NOT USE FORCE.**

INSTALLING AND ADJUSTING THE PICTURE TUBE

1. Wrap the RUBBER STRIP around the front of the tube. A rubber band may be used to hold the RUBBER STRIP in place.
2. Position the tube so that ANODE CONTACT is located at the left side of the tube as viewed from the screen.
3. Slip the neck of the tube through the RUBBER COLLAR, DEFLECTION YOKE, and FOCUS COIL; seating the RUBBER STRIP on the two front mounting brackets. Make sure that the bottom face of the tube rests against the rubber stop pads and not against the metal brackets.
4. Place the MOUNTING STRAP around the RUBBER STRIP and tighten firmly.
5. Move the REAR SUPPORT so that the RUBBER COLLAR rests firmly against and supports the cone of the tube. Tighten the REAR SUPPORT ADJUSTMENT SCREWS.
6. Slip the ION TRAP over the neck of the tube. The blue side of trap should be uppermost with the magnet on the right (rear view).
7. Connect the PICTURE TUBE SOCKET and the ANODE CONNECTOR.
8. Turn the receiver on and allow a few minutes for warm up.
9. Advance the BRIGHTNESS control and set the ION TRAP for maximum raster brilliance, backing off the BRIGHTNESS control as the maximum point is approached. The ION TRAP must be rotated about the axis of the tube as well as shifted along the neck in order to obtain the proper setting. With the BRIGHTNESS control set for slightly above normal brilliance and the CONTRAST control full counter-clockwise, adjust the FOCUS control until the raster is sharply defined. Readjust the BRIGHTNESS control for normal brightness and touch up the ION TRAP setting.
10. Connect the antenna and tune in a test pattern.
11. Readjust the CONTRAST control until the five different shades of gray are clearly distinguished in the test pattern.
12. Check the position and appearance of the test pattern. If it is off center or shadowed at the corners (electron beam striking the neck of the tube) adjust the centering shaft. Focussing is accomplished by adjusting the slotted shaft on the FOCUS assembly until a clear, sharply defined raster is obtained.
    CAUTION: It will not be necessary to adjust the CENTERING control excessively. Excessive force on the shaft may snap the neck of the tube.
13. If the lines of the raster are not horizontal or square with the escutcheon, loosen the DEFLECTION YOKE ADJ. screw and rotate the DEFLECTION YOKE until the proper condition is obtained. Tighten this adjustment.
14. Follow the procedure under the NON-OPERATING CONTROL ADJUSTMENTS and make any minor adjustment of the FOCUS assembly or DEFLECTION YOKE necessary to obtain the desired results. The final adjustment of the FOCUS COIL should leave the test pattern approximately centered. Check the position and appearance of the test pattern again and if it is off center or shadowed at the corners (electron beam striking the neck of the tube) adjust the centering control. Reset the FOCUS control if necessary.

ADJUSTMENT OF THE HIGH VOLTAGE ON THE PICTURE TUBE ANODE

The second anode potential should be slightly less than 14,000 volts on a receiver that is functioning properly. Since the high voltage is obtained from the horizontal output transformer, the service adjustments must be made, or known to be in proper adjustment, before a high voltage measurement will have any meaning.

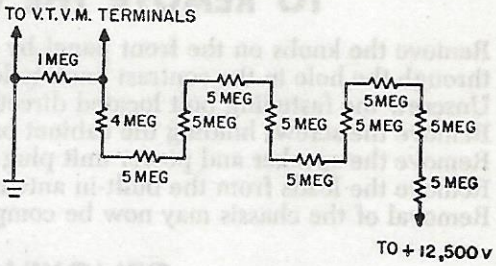

Improper operation of the horizontal sweep circuit or circuit faults in the high voltage filter will generally account for an abnormal anode potential. If the anode potential is low, check the HORIZONTAL DRIVE adjustment outlined above.

CAUTION HIGH VOLTAGE

DO NOT USE HAND-HELD FLEXIBLE TEST LEADS WHEN MAKING THE FOLLOWING MEASUREMENT. KEEP THE HANDS CLEAR OF THE CIRCUIT DURING MEASUREMENT. A 11 TO 14 KV. POTENTIAL EXISTS IN THIS CIRCUIT. EXERCISE ALL NORMAL HIGH VOLTAGE PRECAUTIONS.

To measure the second anode potential, set the CONTRAST and BRIGHTNESS controls at minimum. With the controls in this position, the resistance of the test circuit will simulate the load presented to the high voltage power supply of the picture tube. Connect a test circuit as shown. Make the resistor string self-supporting and allow adequate clearance between the resistors and chassis parts to prevent high voltage breakdown. A meter scale of 0 to 300 volts or larger should be used. Observe the reading on the meter scale and multiply this reading by 50 to obtain the voltage across the circuit. As an example, if the V.T.V.M. reads 260 volts, the potential is 260 x 50 or 13,000 volts.

After it has been determined that the receiver is otherwise in good working order and properly adjusted, the High Low Voltage switch on the rear of the chassis should be set to the position providing a 2nd anode voltage of 12.5-13.5 KV. This switch has been provided mainly to compensate for variation in line voltage.

HORIZONTAL OSCILLATOR ALIGNMENT

If the Horizontal Hold control on the front panel fails to restore synchronization the Horizontal Range and Horizontal Lock adjustments should be reset.

1. Turn the Hold control to the full clockwise position. Adjust the Horizontal Range adjustment until a vertical bar appears in the pattern.
2. Turn the Hold control to the full counterclockwise position. Momentarily switch off the station. Three or four horizontal bars should then appear on the screen. If too many or too few bars appear, the number may be decreased by turning the Horizontal Lock adjustment in the clockwise direction, or increased by turning the Horizontal Lock adjustment in the counterclockwise direction.
3. Repeat step No. 1.
4. Check the action of the front controls on all active channels. Repeat the above steps if necessary to maintain stable synchronization.

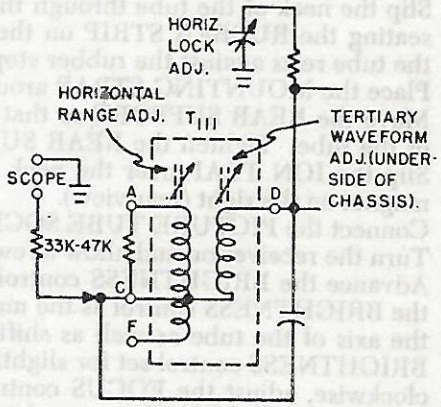

OSCILLOSCOPE CONNECTION FOR HORIZONTAL OSCILLATOR ALIGNMENT

If the above procedure fails to restore stable synchronization, a waveform adjustment may be made with the aid of an oscilloscope.

5. Connect the oscilloscope as shown in oscilloscope connection diagram. Adjust the Tertiary Waveform adjustment until the sine wave is equal in amplitude to the peak of the sawtooth (waveform-diagrams), while maintaining the picture in synchronization with the Horizontal range adjustment.

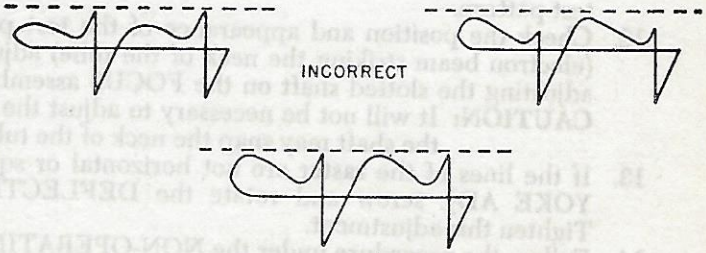

HORIZONTAL OSCILLATOR WAVEFORMS

This adjustment is very important for correct operation of the circuit. If the broad peak of the wave on the oscilloscope is lower than the sharp peak, the noise immunity becomes poorer, the stabilizing effort of the tuned circuit is reduced and drift of the oscillator becomes more serious.

HORIZONTAL OSCILLATOR WAVEFORMS

On the other hand, if the broad peak is higher than the sharp peak, the oscillator is overstabilized, the pull-in range becomes inadequate and the broad peak can cause double triggering of the oscillator when the hold control approaches the clockwise position.

6. Remove the oscilloscope and repeat step No. 1 and No. 2 if necessary.
7. Check the action of the front panel controls and repeat above steps as required to provide positive synchronization on all channels.

FM SOUND CHANNEL ALIGNMENT

EQUIPMENT REQUIRED

Signal generator covering 4 MC to 30 MC.

Electronic voltmeter.

IN34 crystal detector circuit as shown to the left.

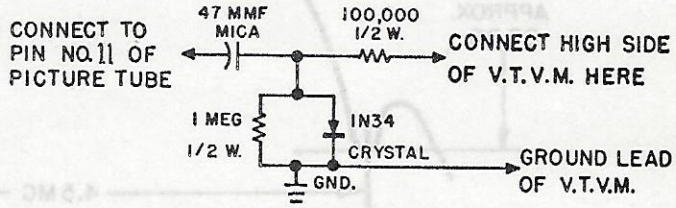

SOUND ALIGNMENT TEST CIRCUIT

PROCEDURE

1. Connect the low frequency signal generator output, through a .005 capacitor, across the IF test terminals.
2. Connect the detector circuit and VTVM as shown in the sound alignment circuit.
3. Set the signal generator to 4.5 MC using just enough output to give approximately one volt reading at the electronic voltmeter.
4. Adjust the 4.5 MC TRAP ADJUSTMENT located on the under side of the chassis for minimum voltage as shown on the meter.
5. Disconnect the detector test circuit.
6. Connect the VTVM to pin No. 2 of the 6AL5 FM DETECTOR tube (V110).
7. Adjust the LIMITER GRID adjustment (L106) and the primary of T-108 (bottom adjustment) for maximum indication on the voltmeter.
8. Connect the electronic voltmeter across the 1000 mmf condenser (C130) at the output of the FM dectector stage and adjust the FM DET. SEC. ADJ. of the FM detector transformer (T-108) for the null. If a null (0-volts) appears at more than one setting use the position nearest to the top limit of the tuning slug.
9. Shift the frequency of the signal generator either side of 4.5 MC and touch up the FM DETECTOR PRIMARY ADJUSTMENT (bottom of T-108) for approximately equal peaks. Use just enough signal generator output to obtain one volt peaks for best results.
10. After completing the alignment procedure and placing the receiver in operation again, carefully tune in a TV test pattern and adjust the 4.5 MC TRAP ADJ. for maximum vertical wedge definition.

IF AMPLIFIER ALIGNMENT USING A 20-30 MC SIGNAL GENERATOR AND A V.T.V.M.

1. Place a tight fitting shield over the osc./mixer tube (V-2) and connect the ungrounded RF lead from the signal generator to the shield. This shield should not be grounded.
2. Connect the V.T.V.M. to test term. "A" (See alignment location diagram).
3. Use just enough signal generator output to maintain a 2 volt level at the V.T.V.M.
4. Set the signal generator to 21.75 MC and adjust the 21.75 MC sound trap (bottom slug of T-103) for a minimum voltage at the V.T.V.M.
5. Set the signal generator to 24.75 MC, hold the channel selector between channels and adjust L-113 for maximum V.T.V.M. reading. Return the channel selector to its normal position, shunt the 4700 ohm grid resistor of V-101 with a 1000 ohm resistor and adjust L-9 for maximum V.T.V.M. reading.
6. All other IF adjustments are made to give maximum indications on the V.T.V.M. at the frequencies designated in the alignment location diagram and on the schematic diagram.

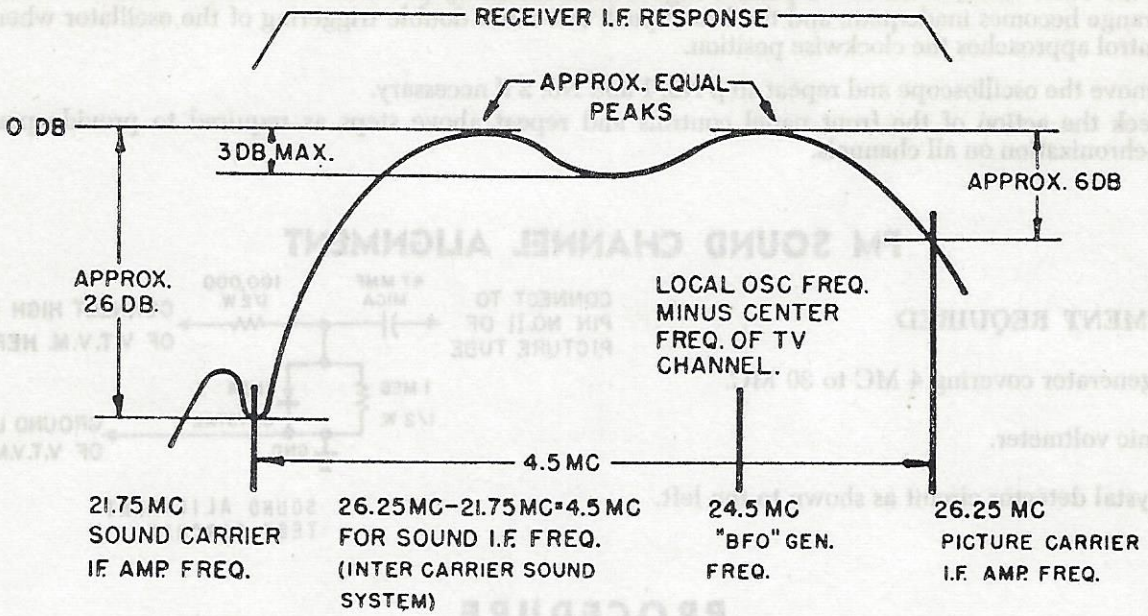

IF AMPLIFIER RESPONSE.

IF AMPLIFIER ALIGNMENT CHART

Signal Generator Frequency (No Modulation)	Adjustment (Refer to alignment location diagram)	Stage Adjusted
24.75 MC	L113 and L9 24.75 MC IF Adj.	1st IF amplifier
25.6 MC	T102 25.6 MC IF Adj.	2nd IF amplifier
23.1 MC	T103 23.1 MC IF Adj. Top	3rd IF amplifier
24.5 MC	T104 24.5 MC IF Adj.	Video Detector
21.75 MC	T103 21.75 MC Sound Bottom Trap Adj.	Sound Trap Adj. (Adj. for Min. Voltage)

NOTE: After adjusting the 21.75 MC Sound Trap recheck the setting of the 3rd IF Transformer (Top of T-103).

7. Check the i-f amplifier frequency response by tuning the signal generator from 21 MC through 26.25 MC and observing the change in d-c voltage at the electronic voltmeter. If the signal generator output is set for an electronic voltmeter reading of 1.5 volts at the peak i-f amplifier response, the d-c voltage should not drop below one volt between the two peaks normally obtained with this i-f amplifier. If the response is unsatisfactory, repeat the procedure or try slight modifications of the recommended settings to obtain the desired response. Avoid resonating the coils with the iron core at the bottom end of the coil form (Adjustment screw near limit of its travel). If a sweep type signal generator and oscilloscope are available the problem of making the final adjustments will be much easier. Check the two carrier i-f responses, 21.75 MC and 26.25 MC. The 21.75 MC response will be approximately 26 db below the peak response (approx. 0.15 volt) and the 26.25 MC response will fall approximately 6db below the peak (approx. 0.75 volt).

The average i-f amplifier sensitivity, when feeding the signal generator output through the receiver as described in step 2, will run approx. 800 to 1500 microvolts for the one volt d-c peak measured at resistor R-116. (Receiver's oscillator operating on any vacant channel.)

VOLTAGE CHART

TUBE DESIGNATION	PIN NUMBER 1	2	3	4	5	6	7	8	9
V101 6CB6	—.8	.7	H	H	135	135	—		
V102 6CB6	—.3	.7	H	H	135	135	—		
V103 6CB6	NR	.8	H	H	140	140	—		
V104 6AL5	—	.3	H	H	NR	—	—		
V105 6CB6	—	2 to * 29	H	H	165	145	2 to * 29		
V106 6SN7	—	36	4	—	37	—	H	H	
V107 6SN7	—29	115	—	36	110	36	H	H	
V108 6S4	—	15 ** to 30	—	H	H	NR	—		430
V109 6AU6	NR	—	H	H	62	62	.5v		
V110 6AL5	—	—	H	H	NR	—	NR		
V111 6AT6	—1	—	H	H	—	—	70		
V112 6AQ5	—	12	H	H	225	240	—		
V113 6AX5		H					H	170	
V114 5U4G		(H)375						(H)375	
V115 6SN7	—17	175	—2	—55	150	—	H	H	
V116 6AU5	—10	H	22	—	490	—	H	230	
V117 6W4	—	—	480 ***		300	—	(H)465	(H)465	
V118 1B3	TAKE NO MEASUREMENTS								
V119 17BP4	K—Pin 11=140 v (Contrast and brightness set for normal operation.) G—Pin 2=430 v								

NR—Non readable.
*—Depends upon setting of contrast control.
**—Depends upon setting of vertical linearity control.
***—Low position of High-Low switch.

Power Plug Readings: Main heater 6.1 v, V117 heater 6.3 v
B+ Low 145 v, B+ High 320 v.

Readings taken with a V.T.V.M. are D.C. and positive unless otherwise specified. Zero signal input. Line voltage 117V A.C.

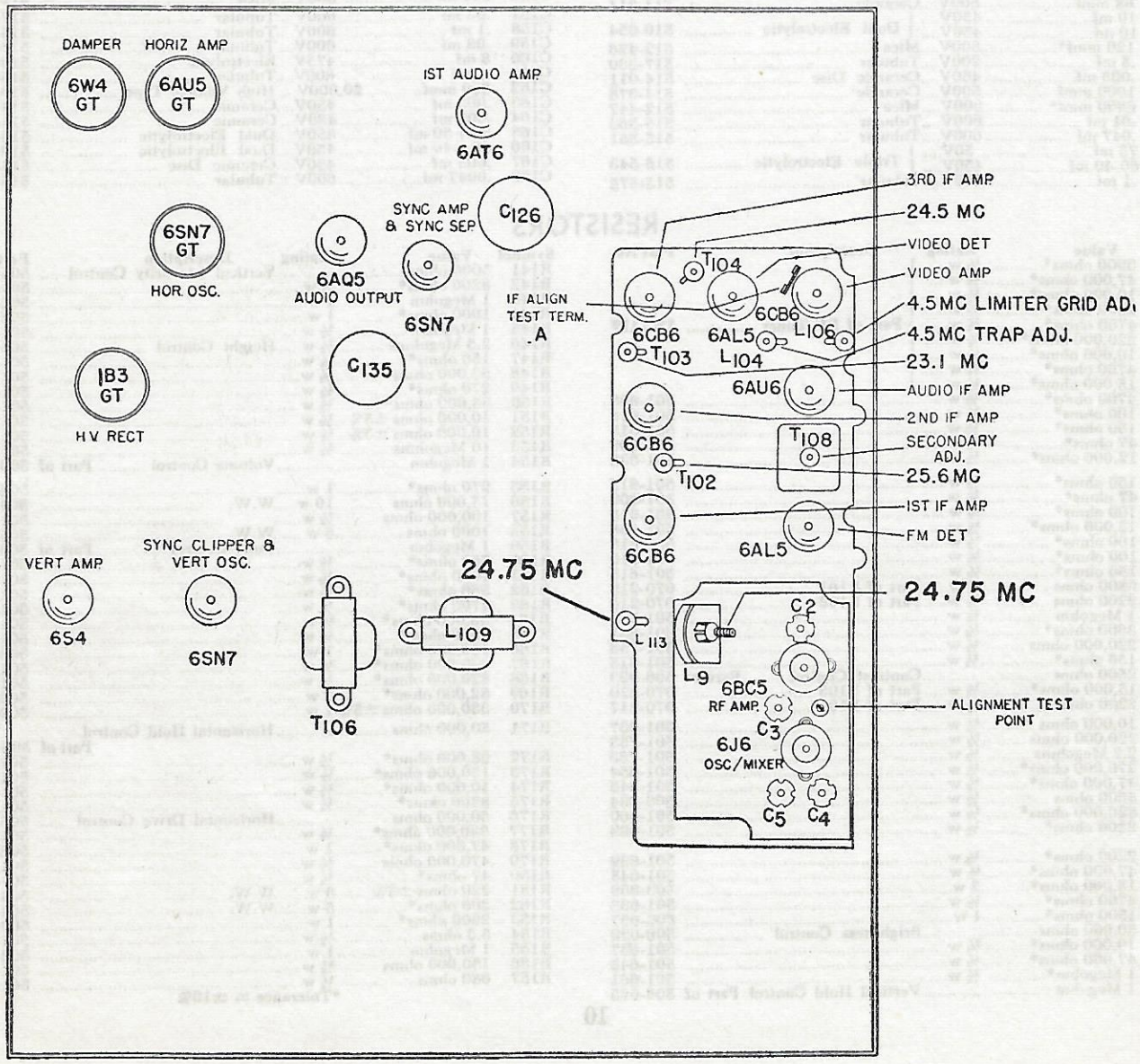

TUBE LOCATION AND ALIGNMENT POINTS DIAGRAM

REPLACEMENT PARTS

For dependable repairs use only genuine replacement parts. When ordering always give description and part number and model number of receiver.

CAPACITORS

Symbol	Value	Rating	Description	Part No.
C1	5 mmf	500V	Ceramic	
C2	.5-3 mmf		Trimmer	
C3	.001 mf	400V	Tubular	
C4	120 mmf	500V	Ceramic	
C5	.5-3 mmf		Trimmer	
C6	.001 mf	400V	Tubular	
C7	10 mmf	500V	Ceramic	
C8	100 mmf	500V	Ceramic	Part of RF Tuner
C9	20 mmf	500V	Ceramic	130-117
C10			Sharp Tuning	
C11	.5-3 mmf		Trimmer	
C12	.5-3 mmf		Trimmer	
C13	.001 mf	400V	Tubular	
C14	10 mmf	500V	Ceramic	
C15	300 mmf	500V	Ceramic	
C16	.005 mmf	450V	Disc Ceramic	
C101	.005 mf	450V	Ceramic Disc	514-011
C102	.005 mf	450V	Ceramic Disc	514-011
C103	.005 mf	450V	Ceramic Disc	514-011
C104	.005 mf	450V	Ceramic Disc	514-011
C105	68 mmf	500V	Ceramic	514-314
C106	.005 mf	450V	Ceramic Disc	514-011
C107	.005 mf	450V	Ceramic Disc	514-011
C108	10 mmf°	500V	Ceramic	514-304
C109	.5 mf	50V	Tubular	515-013
C110	.5 mf	50V	Tubular	515-013
C111	100 mf	10V	Electrolytic	516-053
C112	2.2 mmf	500V	Ceramic	517-973
C113	47 mmf	500V	Ceramic	514-312
C114	220 mmf°	500V	Mica	512-429
C115	.05 mf	600V	Tubular	517-620
C116	2200 mmf	500V	Ceramic	514-382
C117	68 mmf	500V	Ceramic	514-314
C118A	10 mf	450V	Dual Electrolytic	516-054
C118B	10 mf	450V		
C119	120 mmf°	500V	Mica	512-426
C120	.5 mf	200V	Tubular	517-230
C121	.005 mf	450V	Ceramic Disc	514-011
C122	1000 mmf	500V	Ceramic	514-378
C123	6800 mmf°	300V	Mica	512-447
C124	.01 mf	600V	Tubular	515-563
C125	.047 mf	600V	Tubular	515-851
C126A	75 mf	50V	Triple Electrolytic	516-543
C126B	60-40 mf	450V		
C127	.1 mf	600V	Tubular	515-575
C128	47 mmf	500V	Ceramic	514-312
C129A	.004 mf		Ceramic Dual	514-020
C129B	.004 mf	450V		
C130	1000 mmf	500V	Ceramic	514-378
C131	.01 mf	600V	Tubular	515-563
C132	5 mf	50V	Electrolytic	516-055
C133	330 mmf°	500V	Ceramic	514-322
C134	.01 mf	600V	Tubular	515-563
C135A	20 mf	25V	4 Sect. Electrolytic	516-544
C135B	40 mf	450V		
C135C	40-40 mf	250V		
C136	.0047 mf	600V	Tubular	515-559
C137	.1 mf	200V	Tubular	515-475
C138	.01 mf	600V	Tubular	515-563
C139	56 mmf	500V	Mica	514-313
C140	.05 mf	600V	Tubular	517-620
C141	.01 mf	600V	Tubular	515-847
C142	.01 mf	600V	Tubular	515-847
C143	.05 mf	600V	Tubular	517-620
C144	.5 mf	200V	Tubular	517-230
C145	.02 mf	600V	Tubular	517-616
C146	.05 mf	600V	Tubular	517-620
C147	330 mmf	500V	Mica	512-431
C148	.01 mf	400V	Tubular	515-827
C149	10-100 mmf		Trimmer Horizontal Lock Control	511-050
C150	82 mmf	500V	Mica	512-424
C151	82 mmf	500V	Mica	512-424
C152	820 mmf	500V	Mica	512-436
C153	4700 mmf	500V	Mica	512-077
C154	5 mf	50V	Electrolytic	516-055
C155	.05 mf	600V	Tubular	517-620
C156	330 mmf	500V	Mica	512-431
C157	.03 mf	600V	Tubular	517-618
C158	.1 mf	600V	Tubular	515-575
C159	.03 mf	600V	Tubular	517-618
C160	8 mf	475V	Electrolytic	516-052
C161	.1 mf	600V	Tubular	515-575
C162	500 mmf	20,000V	High Voltage Type	519-020
C163	.005 mf	450V	Ceramic	514-011
C164	.005 mf	450V	Ceramic	514-011
C165	50+50 mf	350V	Dual Electrolytic	516-542
C166	40+40 mf	450V	Dual Electrolytic	516-512
C167	.005 mf	450V	Ceramic Disc	514-011
C168	.0047 mf	600V	Tubular	515-559

RESISTORS

Symbol	Value	Rating	Description	Part No.
R1	3900 ohms°	½ w	Part of RF Tuner	130-117
R2	47,000 ohms°	½ w		
R3	10,000 ohms°	½ w		
R4	2200 ohms°	½ w		
R5	4700 ohms°	½ w		
R6	220,000 ohms°	½ w		
R7	10,000 ohms°	½ w		
R8	4700 ohms°	½ w		
R9	15,000 ohms°	½ w		
R101	4700 ohms°	½ w		501-633
R102	100 ohms°	½ w		501-613
R103	150 ohms°	½ w		501-615
R104	47 ohms°	½ w		501-609
R105	12,000 ohms°	½ w		501-638
R106	150 ohms°	½ w		501-615
R107	47 ohms°	½ w		501-609
R108	100 ohms°	½ w		501-613
R109	12,000 ohms°	½ w		501-638
R110	100 ohms°	½ w		501-613
R111	100 ohms°	½ w		501-613
R112	150 ohms°	½ w		501-615
R113	6800 ohms	½ w	Part of L101	070-219
R114	2200 ohms	½ w	Part of L102	070-218
R115	1 Megohm	½ w		501-761
R116	3300 ohms°	½ w		501-631
R117	220,000 ohms	½ w		501-753
R118	150 ohms°	½ w		501-615
R119	2500 ohms		Contrast Control Part of	506-023
R120	15,000 ohms°	½ w	Part of L103	070-220
R121	2200 ohms	½ w	Part of L105	070-217
R122	10,000 ohms	½ w		501-637
R123	220,000 ohms	½ w		501-753
R124	2.2 Megohms	½ w		501-765
R125	270,000 ohms°	½ w		501-654
R126	47,000 ohms°	½ w		501-645
R127	5600 ohms	½ w		503-334
R128	820,000 ohms°	½ w		501-660
R129	2200 ohms°	½ w		501-629
R131	2200 ohms°	½ w		501-629
R132	47,000 ohms°	½ w		501-645
R133	15,000 ohms°	2 w		503-339
R134	4700 ohms°	½ w		501-633
R135	1500 ohms°	1 w		502-627
R136	50,000 ohms		Brightness Control	506-029
R137	10,000 ohms°	½ w		501-637
R138	47,000 ohms°	½ w		501-645
R139	1 Megohm°	½ w		501-661
R140	1 Megohm		Vertical Hold Control Part of	506-025
R141	5000 ohms		Vertical Linearity Control	505-055
R142	8200 ohms°	½ w		501-636
R143	1 Megohm	1 w		502-761
R144	1000 ohms°	1 w		502-625
R145	1 Megohm	½ w		501-761
R146	2.5 Megohms	½ w	Height Control	505-054
R147	150 ohms°	½ w		501-615
R148	22,000 ohms°	½ w		501-641
R149	270 ohms°	½ w		501-618
R150	33,000 ohms°	½ w		501-643
R151	10,000 ohms ±5%	½ w		501-807
R152	10,000 ohms ±5%	½ w		501-807
R153	10 Megohms	½ w		501-773
R154	1 Megohm		Volume Control Part of	506-023
R155	270 ohms°	1 w		502-618
R156	15,000 ohms	10 w	W.W.	504-051
R157	100,000 ohms	½ w		501-749
R158	1000 ohms	5 w	W.W.	504-050
R159	1 Megohm		Tone Control Part of	506-029
R160	560 ohms°	½ w		501-622
R161	1000 ohms°	½ w		501-625
R162	560 ohms°	½ w		501-622
R163	4700 ohms°	½ w		501-633
R164	56,000 ohms°	½ w		501-646
R165	3900 ohms°	½ w		501-632
R166	120,000 ohms°	1 w		502-650
R167	330,000 ohms°	½ w		501-655
R168	820,000 ohms°	½ w		501-660
R169	82,000 ohms°	1 w		502-648
R170	330,000 ohms ±5%	1 w		502-019
R171	50,000 ohms		Horizontal Hold Control Part of	506-025
R172	68,000 ohms°	½ w		501-647
R173	150,000 ohms°	½ w		501-651
R174	10,000 ohms°	½ w		501-637
R175	8200 ohms°	½ w		501-636
R176	50,000 ohms		Horizontal Drive Control	505-057
R177	330,000 ohms°	½ w		501-655
R178	47,000 ohms°	1 w		502-645
R179	470,000 ohms	½ w		501-757
R180	47 ohms°	½ w		501-609
R181	220 ohms ±5%	3 w	W.W.	504-049
R182	200 ohms°	5 w	W.W.	504-052
R183	2200 ohms°	1 w		502-629
R184	3.3 ohms	½ w		501-824
R185	1 Megohm	1 w		502-761
R186	150,000 ohms	½ w		501-751
R187	680 ohms	½ w		501-723

°Tolerance = ±10%

CAPACITOR-RESISTOR NETWORKS

CR101	.002 mf ..... 450V....	Vertical Integrating Network	519-503
	2 X .005 mf..... 450V....		
	22,000 ohms ..... .5 w.....		
	2 X 8200 ohms ..... .5 w.....		
CR102	.01 mf..... 450V....	Audio Coupling Network	519-504
	2 X 250 mmf..... 450V....		
	2 X 500,000 ohms.....5 w.....		

TRANSFORMERS AND COILS

Symbol	Description	Part No.
L1, L2	Antenna Coils	Part of R-F Tuner 130-117
L3	Filament Choke	
L4, L5, L6	Converter Coils	
L7	Filament Choke	
L8	R-F Choke Coil	
L9	24.75 Mc I-F Coil	
L101	Video Peaking Coil	070-219
L102	Video Peaking Coil	070-218
L103	Video Peaking Coil	070-220
L104	4.5 Mc Trap, Limiter Grid Adj.	060-151
L105	Video Peaking Coil	070-217
L106	4.5 Mc Trap, Limiter Grid Adj.	060-151
L108	Deflection Yoke	060-156
L110	Horizontal Linearity Coil	060-152
L111	Width-Control Coil	060-153
L112	Filament Choke	060-157
L113	I-F Mixer Coil 24.75 Mc	060-155
L114	Filter Choke	050-107
L115	Filter Choke	050-107
L116	Filter Choke	050-104
T102	1st I-F Transformer	060-148
T103	2nd I-F Transformer	060-149
T104	3rd I-F Transformer	060-150
T106	Vertical Oscillator Transformer	050-174
T107	Vertical Output Transformer	050-176
T108	Ratio Detector Transformer	060-146
T109	Audio Output Transformer	050-177
T110	Power Transformer	050-178
T111	Horizontal Oscillator Transformer	060-147
T112	Horizontal Output Transformer	050-175

MISCELLANEOUS ELECTRICAL PARTS

Part No.	Description
070-216	Silver Vortex Antenna .....
571-072	Antenna Terminal Panel .....
570-033	C.R.T. Socket Assembly .....
110-398	C.R.T. Clamping Strap 17" .....
303-270	C.R.T. Rubber Cushion Strap .....
120-933	Deflection Yoke and Focus Magnet Assembly .....
060-156	Deflection Yoke .....
130-124	Focus Magnet Assembly .....
646-020	Fuse, .25 a., 250 v, Slowblo .....
120-930	Hi Voltage Socket Assembly .....
570-032	Hi Voltage Socket .....
130-118	Ion Trap .....
100-036	Line Cord and Plug Interlock .....
571-226	Line Cord Receptacle .....
120-931	Power Interlock and Antenna Bracket Assembly..
120-932	Power Socket and Mounting Plate Assembly.....
571-177	Plug, 9-prong male .....
570-015	Socket, 9-prong female .....
041-130	Speaker, 8" PM .....
301-339	Spring Clip Coil Guide .....
080-050	Switch SPST Hi Low .....
506-023	Switch, On-Off, part of R154 .....
130-177	Standard Coil Tuner .....
570-001	Tube Socket, Octal .....
570-031	Tube Socket, Octal Low Loss.....
570-030	Tube Socket, 9 pin min. Low Loss.....
570-009	Tube Socket, 7 pin min.....

CABINET PARTS FOR MODELS DV884 AND DV886

Part No.	Description
030-264	Walnut Cabinet, DV884 .....
030-265	Mahogany Cabinet, DV884 .....
030-266	Blonde Cabinet, DV884 .....
110-406	Grille Strip and Medallion Assembly, DV884.....
030-305	Walnut Cabinet, DV886 .....
030-306	Mahogany Cabinet, DV886 .....
030-307	Blonde Cabinet, DV886 .....
110-408	Grille Strip and Medallion Assembly, DV886.....
627-044	Grille Cloth, 13" x 22", Dark .....
627-038	Grille Cloth, 13" x 22", Light .....
120-934	Cabinet Back Cover Assembly .....
350-119	Door Pull .....
572-159	Knob, Plain, Inner .....
572-160	Knob, Plain, Outer .....
572-155	Knob, Contrast .....
572-156	Knob, Off-On Volume .....
572-157	Knob, Channel Indicator .....
572-158	Knob, Fine Tuning .....
332-654	Knob Escutcheon .....
332-655	C.R.T. Escutcheon .....
332-656	C.R.T. Escutcheon Mask .....
332-657	C.R.T. Window .....

CABINET PARTS FOR MODELS VR761 AND VR771

Part No.	Description
030-267	Walnut Cabinet, VR761 .....
030-268	Mahogany Cabinet, VR761 .....
030-269	Blonde Cabinet, VR761 .....
030-302	Walnut Cabinet, VR771 .....
030-303	Mahogany Cabinet, VR771 .....
030-304	Blonde Cabinet, VR771 .....
627-043	Grille Cloth, 13" x 22", Dark .....
627-032	Grille Cloth, 13" x 22", Light .....
120-934	Cabinet Back Cover Assembly .....
350-116	Door Pull .....
572-159	Knob, Plain, Inner .....
572-160	Knob, Plain, Outer .....
572-163	Knob, Contrast .....
572-162	Knob, Off-On Volume .....
572-164	Knob, Channel Indicator .....
572-165	Knob, Fine Tuning .....
332-653	Knob, Escutcheon .....
332-655	C.R.T. Escutcheon .....
332-656	C.R.T. Escutcheon Mask .....
332-657	C.R.T. Window .....

MODELS VR652 and DV785

These console television receivers employ a twenty inch 20CP4 picture tube. With the exception of the cabinet and picture tube and associated parts these receivers are basically the same as the VR771 and DV886 television receivers. Electrically, the VR652 and DV785 are identical to the VR771 and DV886.

For all service information other than that listed on this bulletin, refer to the VR771 and DV886 Service Manual.

REPLACEMENT PARTS FOR VR652

All parts listed in the VR771 Service Manual may be ordered for the VR652 receiver with the exception of the parts listed below which replace corresponding parts in the VR771 Manual.

Part No.	Description
20CP4	20" Picture Tube
030-328	Cabinet VR652, Walnut
030-329	Cabinet VR652, Mahogany
030-330	Cabinet VR652, Blonde
120-981	Cabinet Back Assembly
332-666	C.R.T. Mask Escutcheon 20"
332-667	C.R.T. Window 20"
332-668	C.R.T. Escutcheon 20"
110-418	C.R.T. Strap 20"
570-034	C.R.T. Socket Assembly

Part No.	Description
303-282	C.R.T. Rear Shield 3⅜"
121-099	C.R.T. Foil Shield
120-980	Deflection Yoke and Focus Magnet Assembly
350-130	Door Pull
571-229	H.V. Connector and Leads Assembly
130-127	Ion Trap Magnet
041-138	Speaker 8" P.M. Z = 3.7 ohms
627-043	Speaker Grille Cloth, Dark
627-032	Speaker Grille Cloth, Light

REPLACEMENT PARTS FOR MODEL DV785

All parts listed in the DV886 Service Manual may be ordered for the DV785 receiver with the exception of the parts listed below which replace corresponding parts in the DV886 Manual.

Part No.	Description
20CP4	20" Picture Tube
030-331	Cabinet DV785, Walnut
030-332	Cabinet DV785, Mahogany
030-333	Cabinet DV785, Blonde
120-981	Cabinet Back Assembly
332-666	C.R.T. Mask Escutcheon 20"
332-667	C.R.T. Window 20"
332-668	C.R.T. Escutcheon 20"
110-418	C.R.T. Strap 20"
570-034	C.R.T. Socket Assembly

Part No.	Description
303-282	C.R.T. Rear Shield 3⅜"
121-099	C.R.T. Foil Shield
120-980	Deflection Yoke and Focus Assembly
353-407	Door Pull, Wood, Slate Finish Requirec
571-229	H.V. Connector and Leads Assembly
130-127	Ion Trap Magnet
041-138	Speaker 8" P.M. Z = 3.7 ohms
627-044	Speaker Grille Cloth, Dark
627-038	Speaker Grille Cloth, Light

L,T	L1, L2	L3	L4, L5	L6	L7	L8, L9,	L113	T110,	T102	L112,	T103, L106, L114,	L115, L116,	T108,	T104
C	1 3 4 5			8 9	11, 14	15, 16		102			104, 128, 129A, 129B, 105, 106, 107		108, 130, 131,	
C	2	6		7 10	12, 13			101	103	141, 142, 163	164	165, 166, 135C, 126B,		
R	1		3	5 6 7			101	102, 103, 104, 105,		106, 107, 108, 109, 110, 111,		112, 147, 148, 149, 150, 15		
R	2	4			8 9							186, 165, 166, 167, 168,		

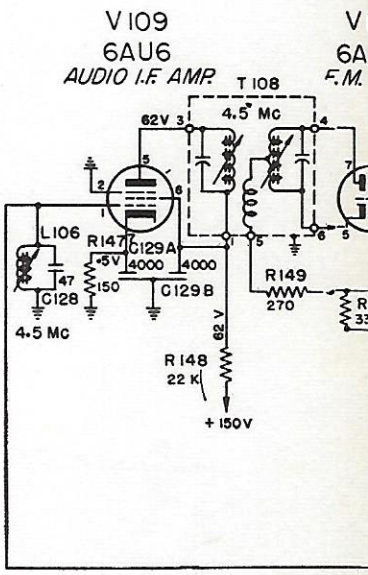

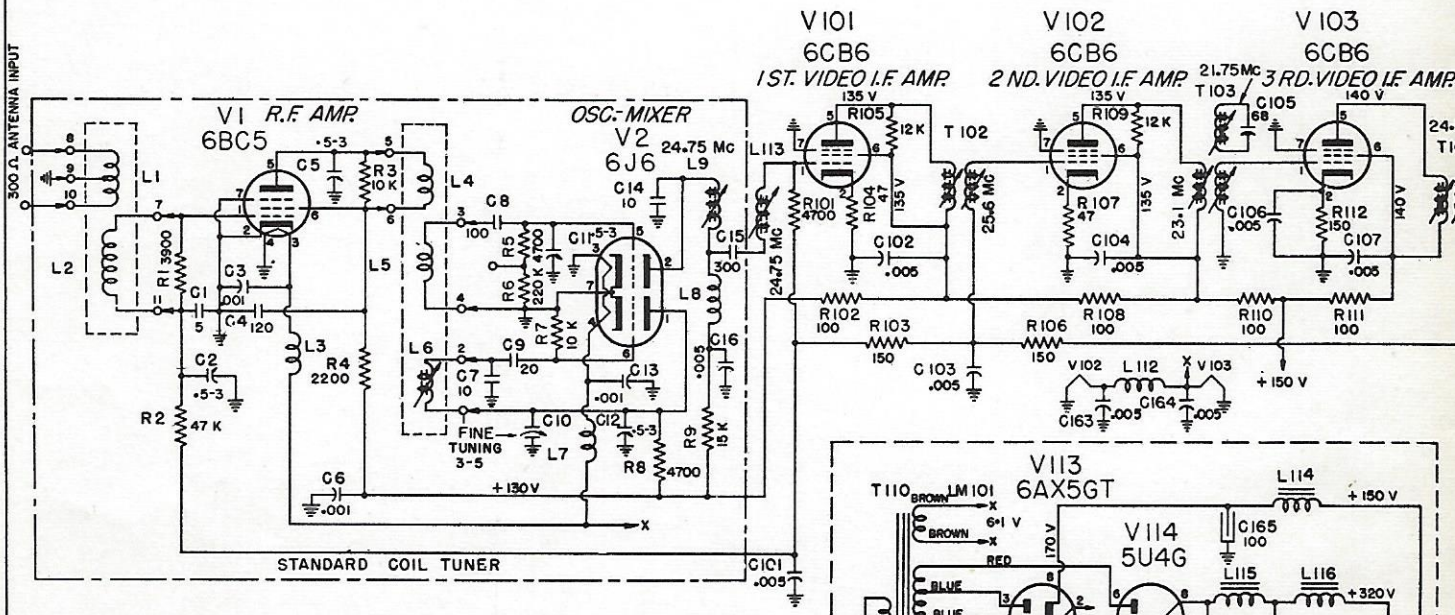

ARROWS ← ON POTENTIOMETERS AND SWITCHES INDICATE CLOCKWISE ROTATION OF SHAFT.

ALL RESISTANCE VALUES ARE INDICATED IN OHMS, K = 1000 OHMS, MEG = 1,000,000 OHMS.

CAPACITOR VALUES, ⊣⊢, ⊣⊢, SHOWN IN MICRO-MICRO FARADS, ⊣⊢, ⊣⊢, SHOWN IN MICRO FARADS.

ALL VOLTAGES ARE MEASURED BETWEEN TUBE SOCKET TERMINALS AND CHASSIS WITH ZERO SIGNAL INPUT.

LINE VOLTAGE - 115 A.C.

ALL VOLTAGES ARE D.C. AND POSITIVE UNLESS OTHERWISE SPECIFIED.

D.C. VOLTAGES ARE MEASURED WITH AN ELECTRONIC VOLTMETER.

SCHEMA

L101, L102 T111 L103, L104, L105, T109 L110 L111 T112 T106, L108 T107	L,T
133, 134, 168 109, 110, 111, 112, 113, 114, 135A, 135B, 136, 118A, 115, 116, 117, 137 119 120, 121, 122, 123, 124, 127, 138, 139, 140, 126 A	C
46, 147, 148, 149, 150, 151, 152, 153, 154, 118B, 155, 156, 157, 158, 159, 167 160, 161 162 125	C
54, 158, 159, 113, 114, 115, 116, 117, 118, 119, 135, 155, 120, 121, 122, 123, 124, 125, 126, 127, 128, 129, 156, 131, 132, 134, 136, 137, 157, 139, 140, 138, 160, 161, 162, 163, 145, 144, 141; 142, 187	R
71, 172, 173, 174, 175, 176, 177, 178 179, 180, 181, 133, 182, 164 183 184 143 146 185	R

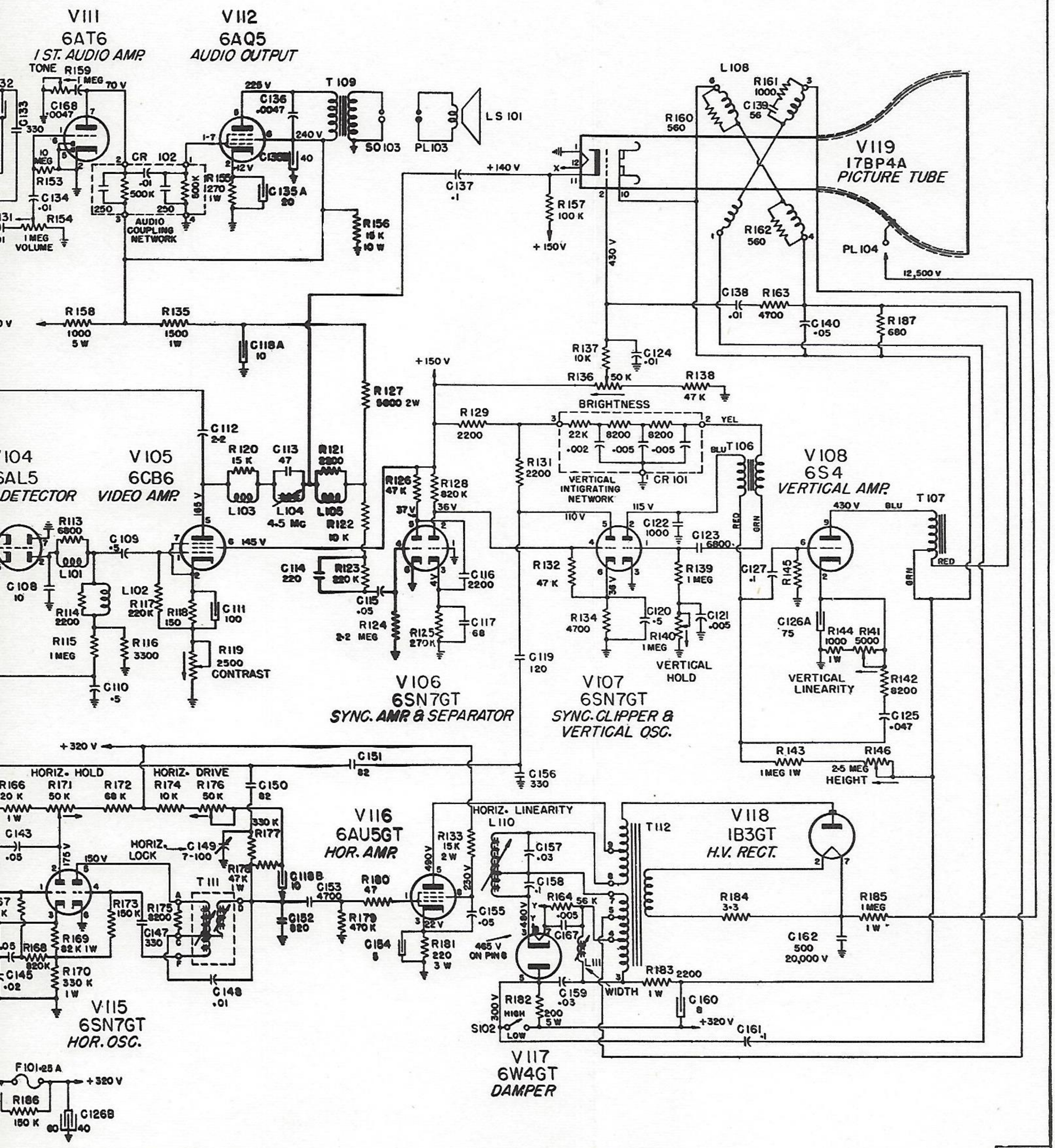

651-137

DRAWING

13 T110, T102 L112, T103, L106, L114, L115, L116, T108, T104 L101, L102 T111 L103, L104, L105, T109 L110 L111

102 104, 128, 129A, 129B, 105, 106, 107 108, 130, 131, 132, 133, 134, 168 109, 110, 111, 112, 113, 114, 135A, 135B, 136, 118A, 115, 116, 117, 137 119 120, 121, 122,

101 103 141, 142, 163 164 165, 166, 135C, 126B, 143, 144, 145 146, 147, 148, 149, 150, 151, 152, 153, 154, 118B, 155, 156, 157, 158, 159, 167

102, 103, 104, 105, 106, 107, 108, 109, 110, 111, 112, 147, 148, 149, 150, 151, 152, 153, 154, 158, 159, 113, 114, 115, 116, 117, 118, 119, 135, 155, 120, 121, 122, 123, 124, 125, 126, 127, 128, 129, 156, 131, 132, 134,

186, 165, 166, 167, 168, 169, 170, 171, 172, 173, 174, 175, 176, 177, 178 179, 180, 181, 133, 182, 164 183

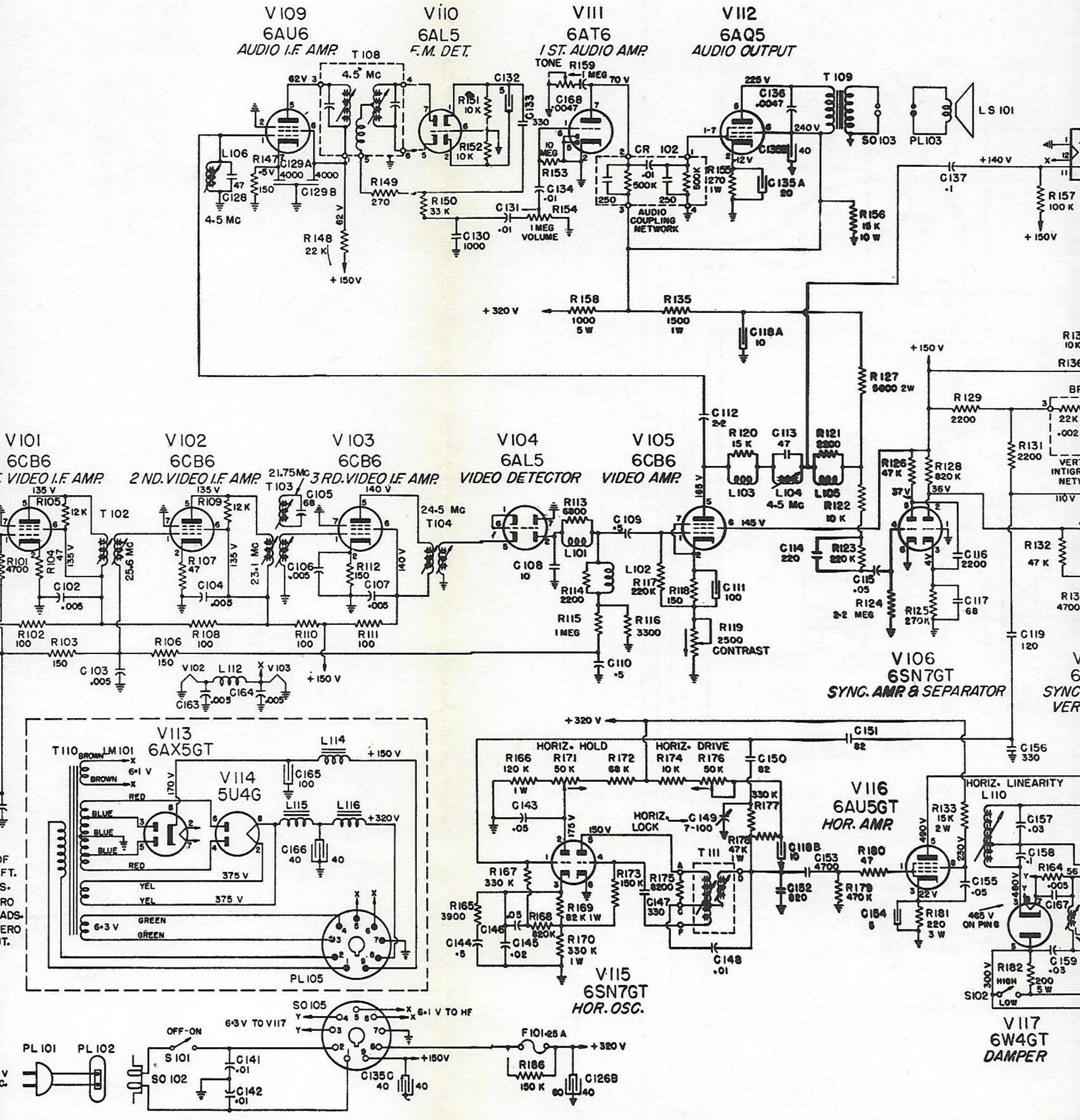

SCHEMATIC DRAWING