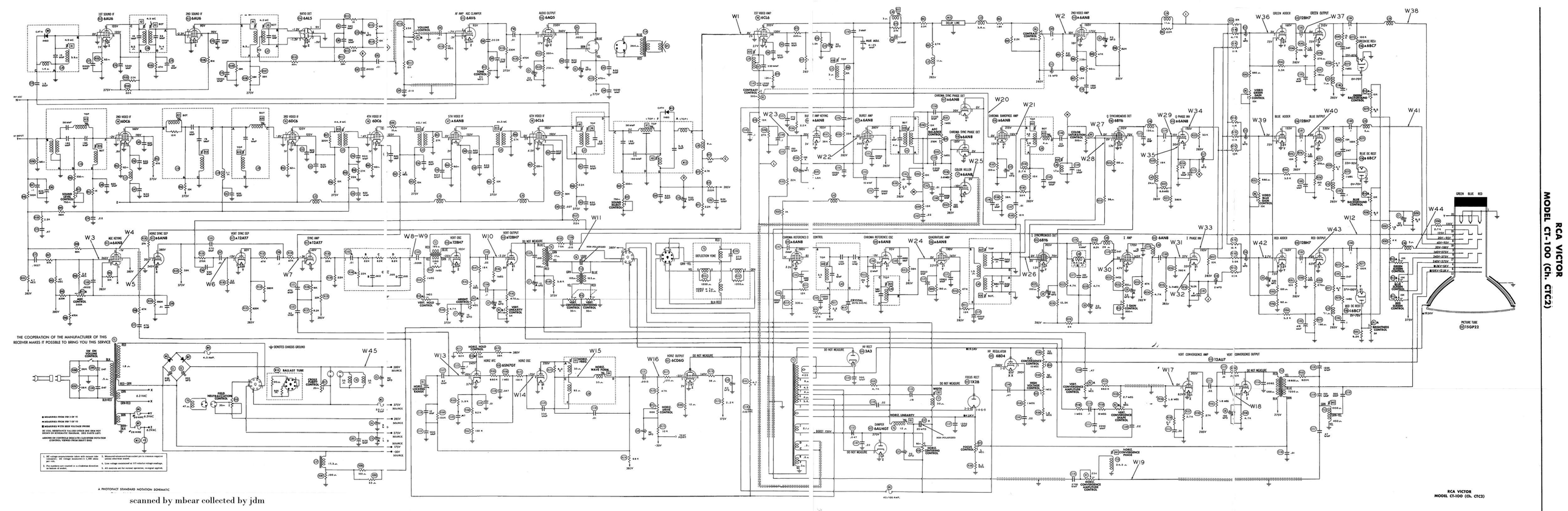


scanned by mbear collected by jdm