DISASSEMBLY INSTRUCTIONS

CHASSIS REMOVAL

1. Remove 5 push on type control knobs from the top.
2. Remove 2 metal screws and the control cover.
3. Remove 8 metal screws and the rear cover.
4. Remove 2 speaker leads, the picture tube socket, ion trap and yoke clamp.
5. Loosen the rear adjustable foot until the chassis can clear it for removal.
6. Remove 4 chassis bolts from the bottom.
7. Partially remove the chassis and yoke; remove the HV lead and remove the chassis.
8. Remove 2 speaker nuts and the speaker.

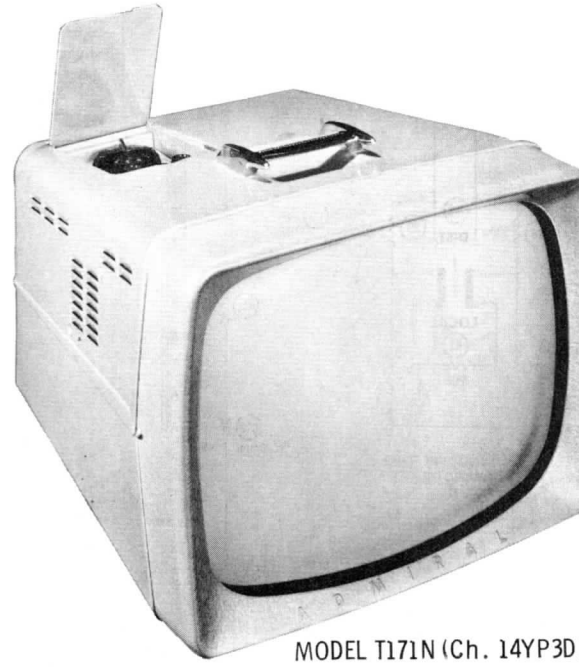

MODEL T171N (Ch. 14YP3D)

CAUTION NOTE

ONE SIDE OF AC LINE CONNECTED TO CHASSIS
Care should be exercised when connecting test equipment or physically contacting the chassis.

MODELS	CHASSIS
T170, T171, T171N, T172AL, T173AL, T171O.....	14YP3D 14YP3DK 14YP3DM

SERVICING IN THE FIELD

TUNER OSCILLATOR ADJUSTMENTS

Remove 5 push on type control knobs from the top. Remove 2 metal screws and the control cover. Set the fine tuning at the center of its range. The adjustments (located in a circle around the shaft) should be made in sequence from the highest to the lowest channel in the area. Adjust for best picture and sound.

PICTURE TUBE SAFETY GLASS CLEANING

Remove 2 metal screws from the bottom and 1 from each side holding the front of the cabinet. Pull the bottom of the front out and swing up to remove.

FOCUS

The focus may be varied by the position of a strap on the base of the picture tube. The strap can be connected between pins 6 and 2 or 6 and 10. Readjust the ion trap for the best focus consistent with maximum brightness.

HORIZONTAL OSCILLATOR FIELD ADJUSTMENT

The horizontal frequency coil is used as the horizontal hold control. Adjust the horizontal hold until the picture synchronizes horizontally. (For location, see tube placement chart.)

FUSES

A 10Ω fusible resistor R82 is used for LV power supply protection. (For location, see tube placement chart.)

CENTERING

Centering is accomplished mechanically by adjusting two magnetic rings around the neck of the picture tube. Rotate the two rings around the neck of the tube until the picture is properly centered.

ADMIRAL
CHASSIS 14YP3D, DK, DM

HOWARD W. SAMS & CO., INC. • Indianapolis 5, Indiana

The listing of any available replacement part herein does not constitute in any case a recommendation, warranty or guaranty by Howard W. Sams & Co., Inc., as to the quality and suitability of such replacement part. The numbers of these parts have been compiled from information furnished to Howard W. Sams & Co., Inc., by the manufacturers of the particular type of replacement part listed. Reproduction or use, without express permission, of editorial or pictorial content, in any manner, is prohibited. No patent liability is assumed with respect to the use of the information contained herein. © 1957 Howard W. Sams & Co., Inc., Indianapolis 5, Indiana. Printed in U.S. of America

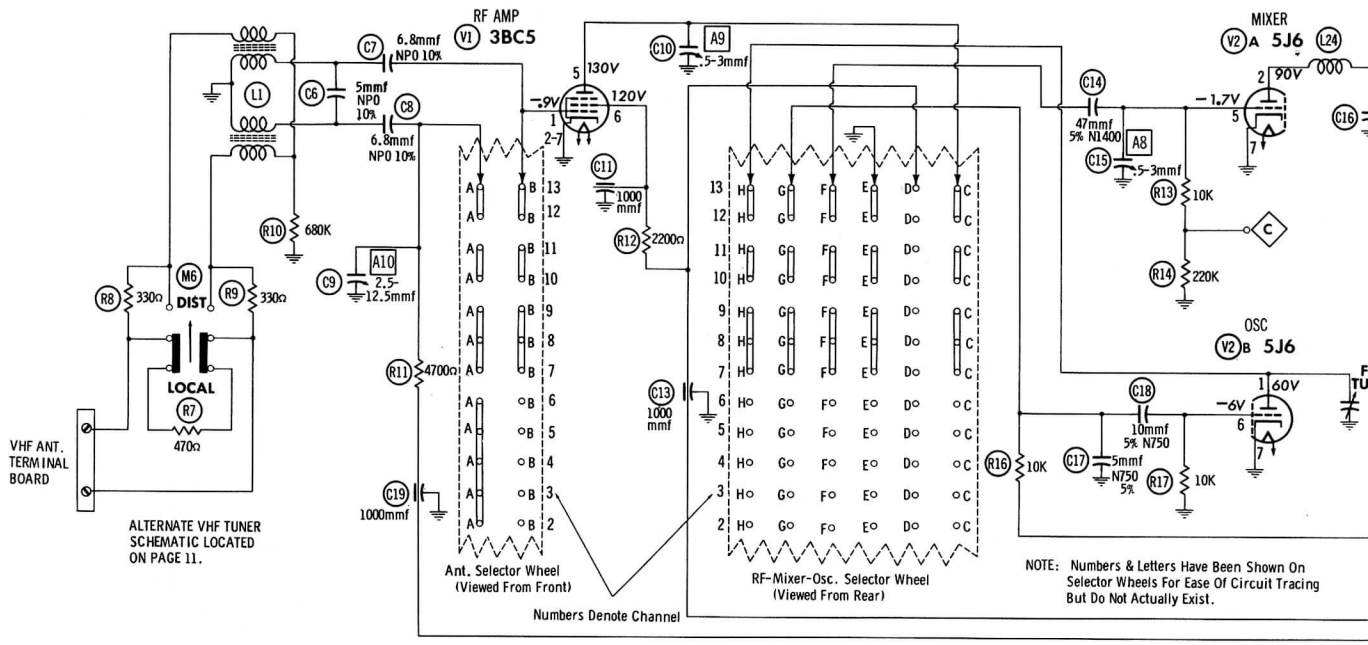

ALTERNATE VHF TUNER SCHEMATIC LOCATED ON PAGE 11.

NOTE: Numbers & Letters Have Been Shown On Selector Wheels For Ease Of Circuit Tracing But Do Not Actually Exist.

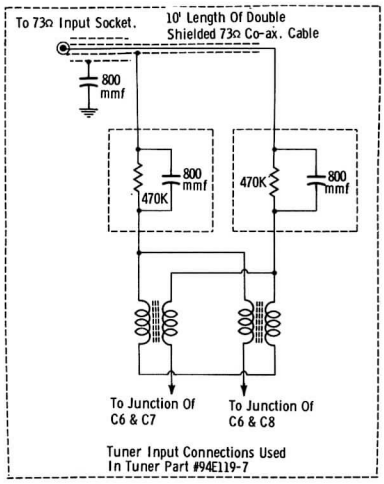

Tuner Input Connections Used In Tuner Part #94E119-7

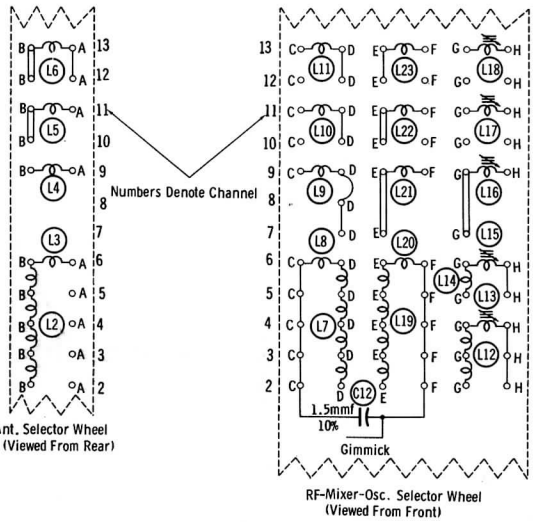

VHF Tuner Part #94E119-1 & #94E119-7

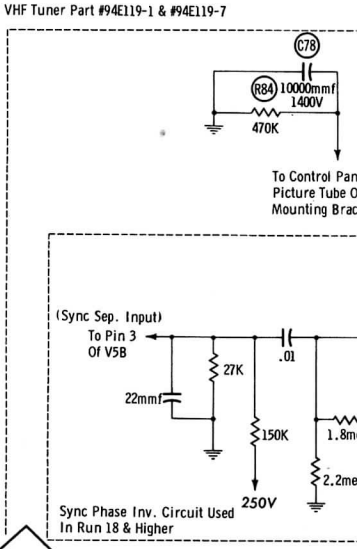

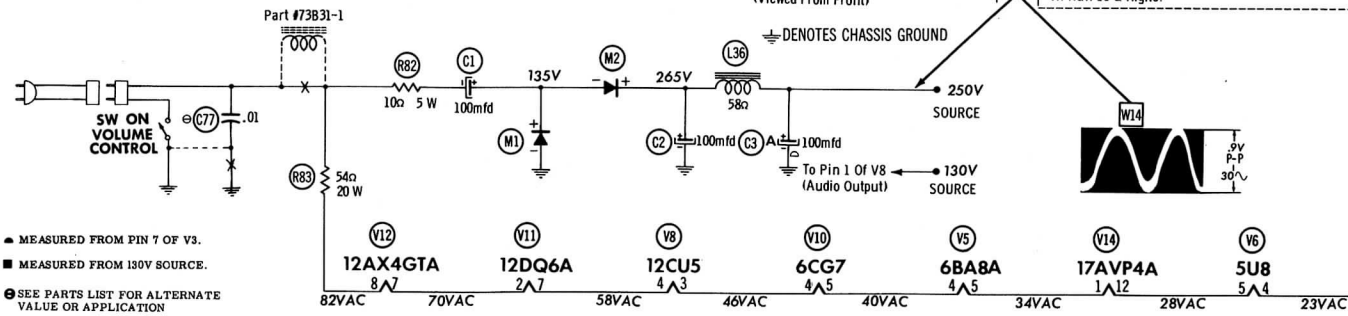

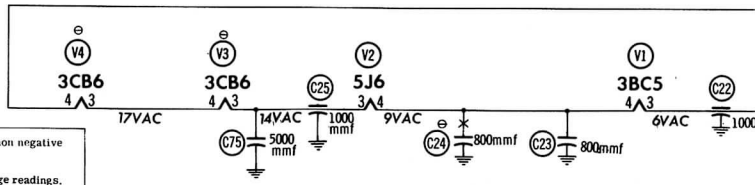

- ◆ MEASURED FROM PIN 7 OF V3.
- ■ MEASURED FROM 130V SOURCE.
- ⊖ SEE PARTS LIST FOR ALTERNATE VALUE OR APPLICATION

DC COIL RESISTANCE VALUES UNDER ONE OHM NOT SHOWN ON SCHEMATIC DIAGRAM.

ARROWS ON CONTROLS INDICATE CLOCKWISE ROTATION (CONTROL VIEWED FROM SHAFT END)

WAVE FORMS TAKEN WITH CONTROLS SET TO PRODUCE 50 VOLTS PEAK-TO-PEAK SIGNAL AT PICTURE TUBE

1. DC voltage measurements taken with vacuum tube voltmeter; AC voltage measured at 1,000 ohms per volt.
2. Pin numbers are counted in a clockwise direction on bottom of socket.
3. Measured values are from socket pin to common negative unless otherwise stated.
4. Line voltage maintained at 117 volts for voltage readings.
5. All controls set for normal operation; no signal applied.

A PHOTOFACT STANDARD NOTATION SCHEMATIC

© Howard W. Sams & Co., Inc. 1957

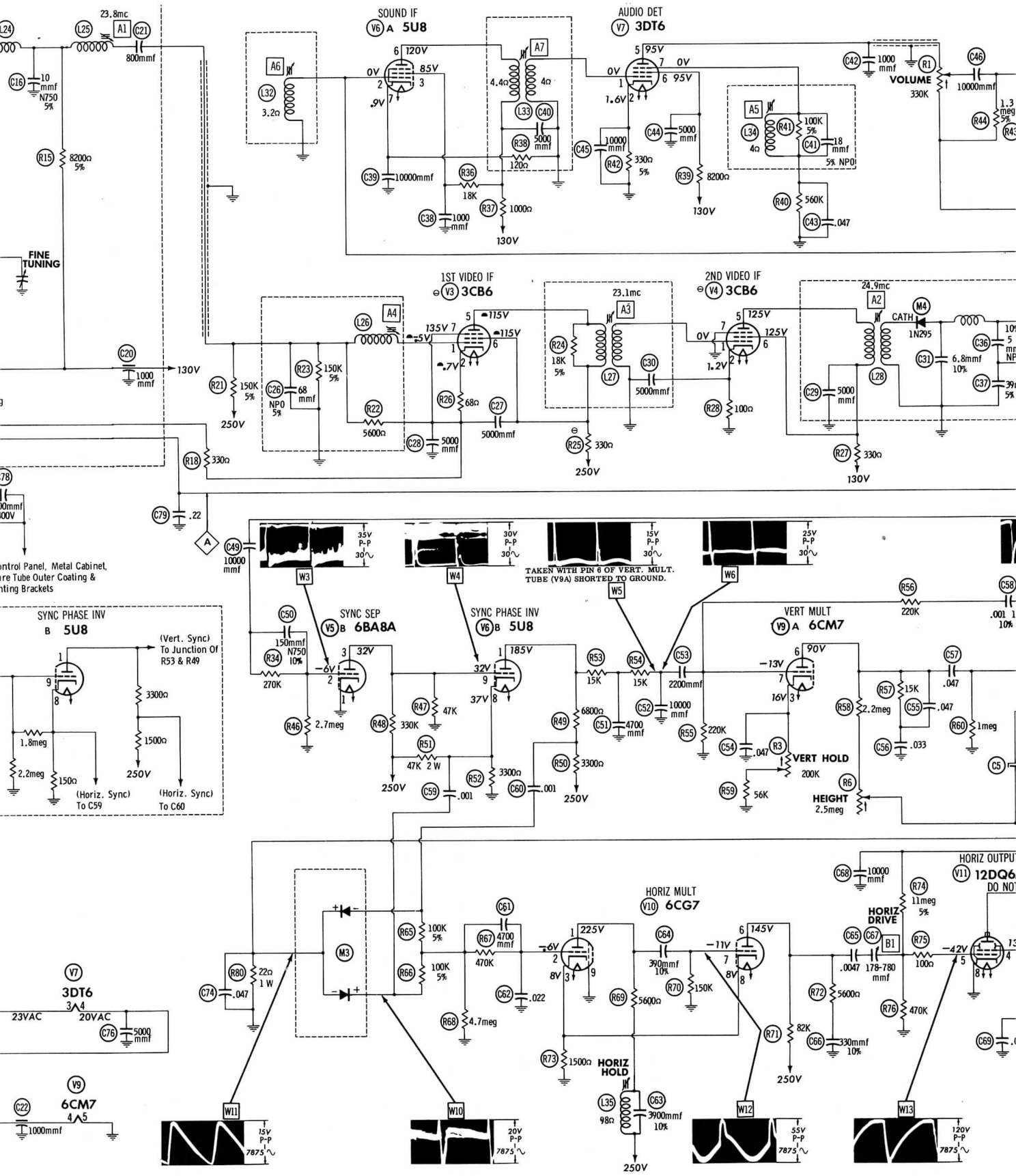
SOUND IF
V6 A 5U8
AUDIO DET
V7 3DT6
VOLUME
330K
FINE TUNING
1ST VIDEO IF
V3 3CB6
2ND VIDEO IF
V4 3CB6
23.8mc
23.1mc
24.9mc
CATH
M4
1N295
130V
250V
TAKEN WITH PIN 6 OF VERT. MULT. TUBE (V9A) SHORTED TO GROUND.
SYNC PHASE INV
B 5U8
(Vert. Sync) To Junction Of R53 & R49
(Horiz. Sync) To C59
(Horiz. Sync) To C60
SYNC SEP
V5 B 6BA8A
SYNC PHASE INV
V6 B 5U8
VERT MULT
V9 A 6CM7
VERT HOLD
200K
HEIGHT
2.5meg
HORIZ MULT
V10 6CG7
HORIZ DRIVE
HORIZ HOLD
HORIZ OUTPUT
V11 12DQ6
DO NOT
V7
3DT6
23VAC
20VAC
V9
6CM7
W3
W4
W5
W6
W10
W11
W12
W13

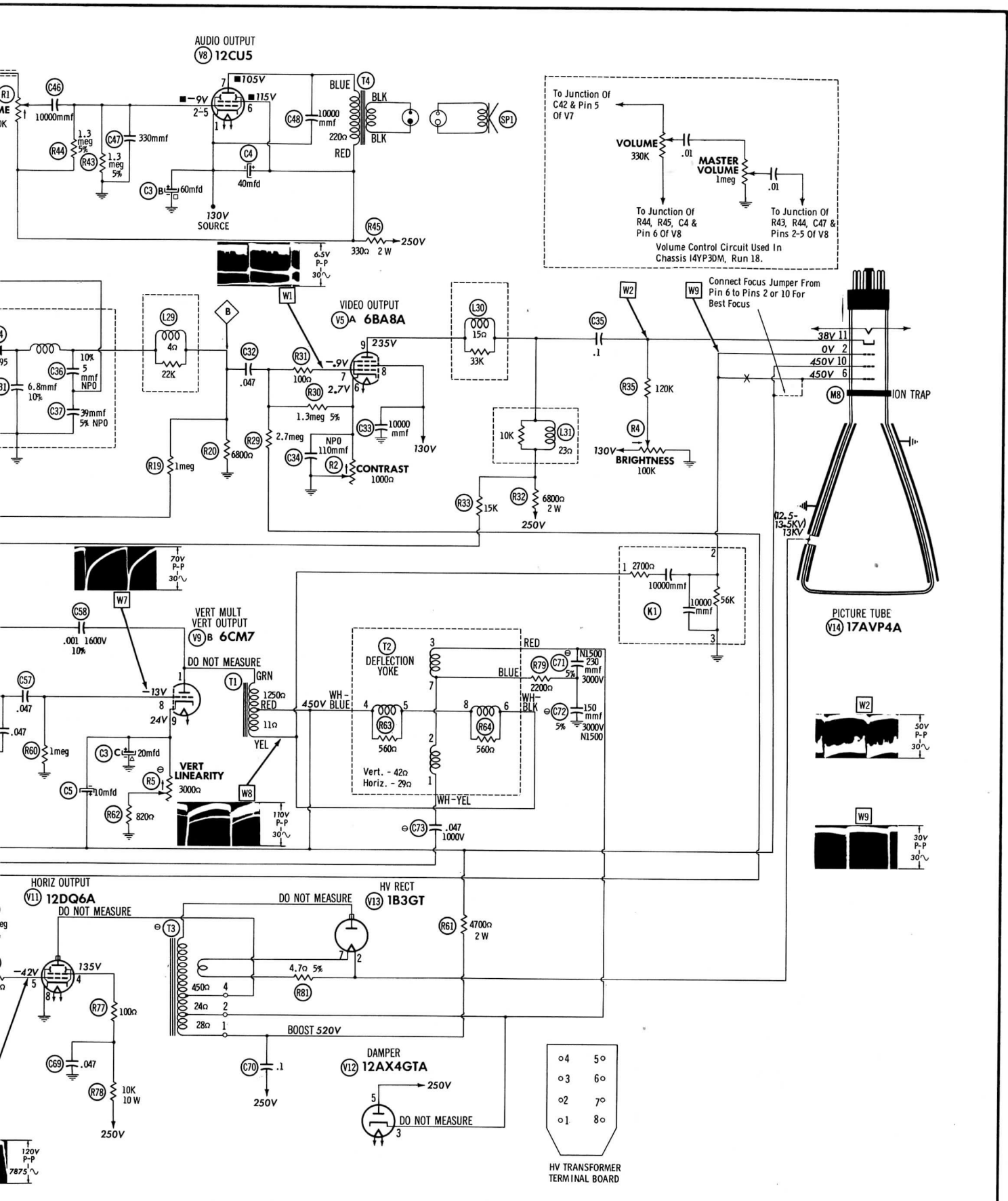

ADMIRAL
CHASSIS 14YP3D, DK, DM

TUBE PLACEMENT CHART

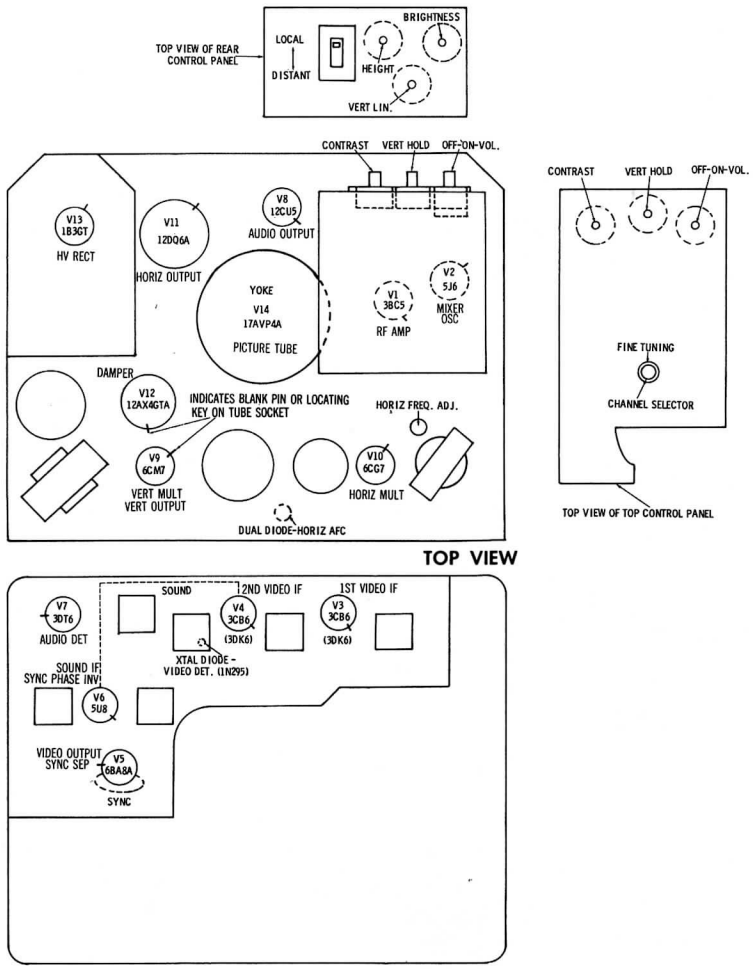

TUBE FAILURE CHECK CHART

The following chart lists tubes whose failures are most likely to produce the indicated symptoms. Refer to tube placement chart for location and type of tube.

POWER SUPPLY FAILURE
No raster, no sound - **Fusible Resistor (R82), Rectifier (M1, M2)**

LOSS OF PICTURE OR SOUND
No pic, no sound, has raster - **V3, V4, Diode (M4), V8**
No pic, no sound, has snow - **V1, V2, V8**
No pic, has sound, has raster - **V5, V14, V8**
Has pic, no sound - **V6, V7, V8**

SYNC FAILURE
No vert. sync - **V5, V6**
No horiz. sync - **V5, V6, Diode (M3)**
No vert. or horiz. sync - **V5, V6**

SWEEP FAILURE
No raster, has sound - **M3, V10, V11, V12, V13, V14**
No vertical deflection - **V9**
Poor vert. linearity or foldover - **V9**
Poor horiz. linearity or foldover - **V10, V11, V12**
Narrow picture - **V10, V11, V12, M1, M2**
Vert. off freq. - **V9**
Horiz. off freq. - **V10**

This receiver employs tubes used in a series filament network, an open filament in any tube in the series will cause the set to be inoperative. (See circuit below.)

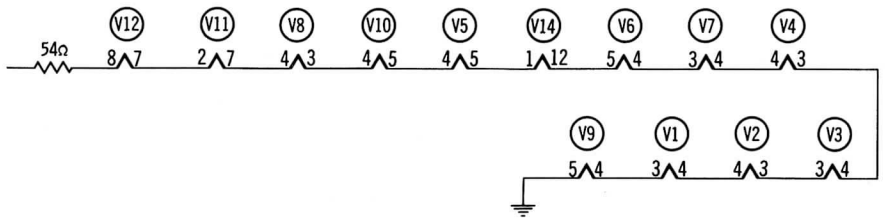

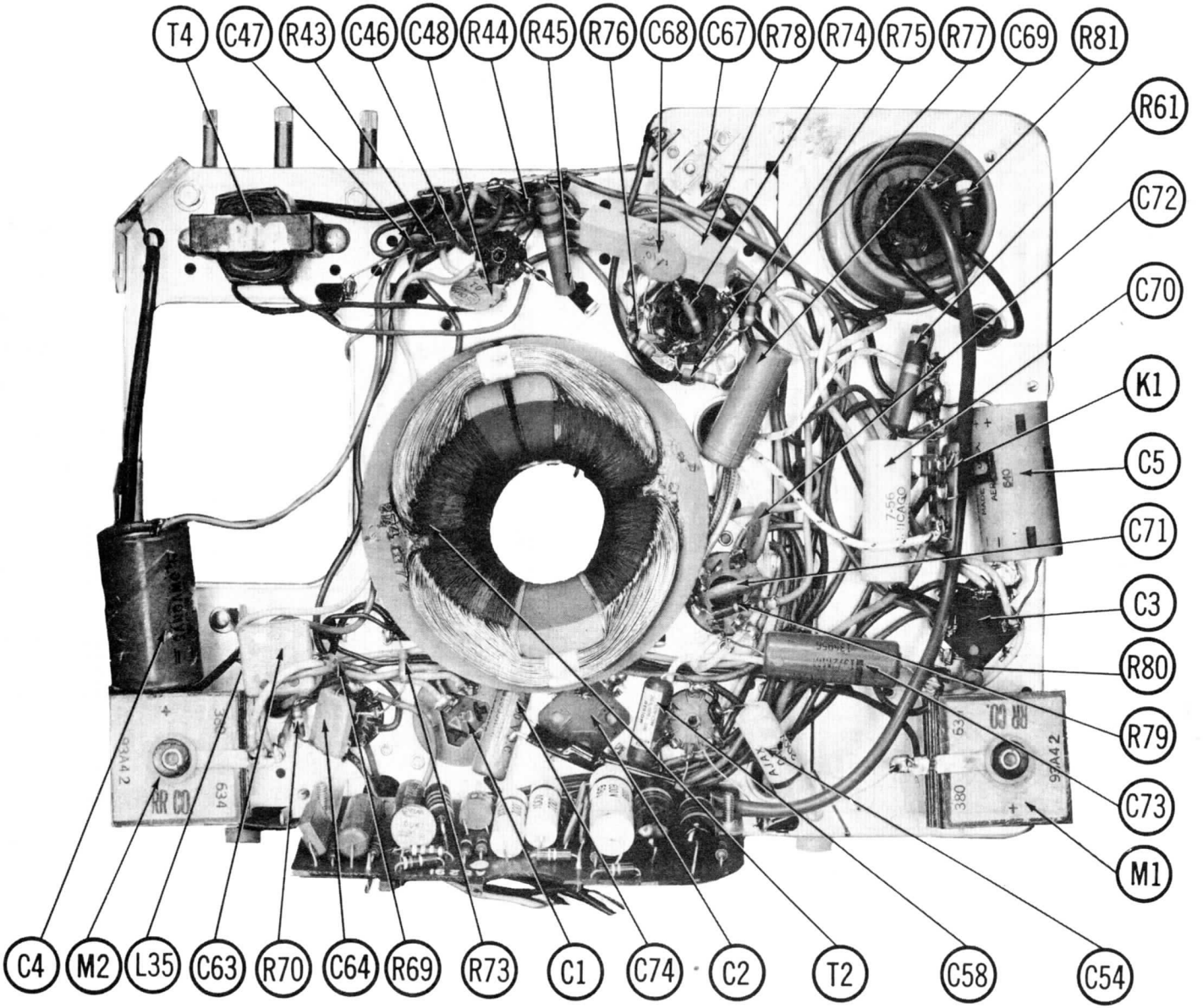

CHASSIS-BOTTOM VIEW

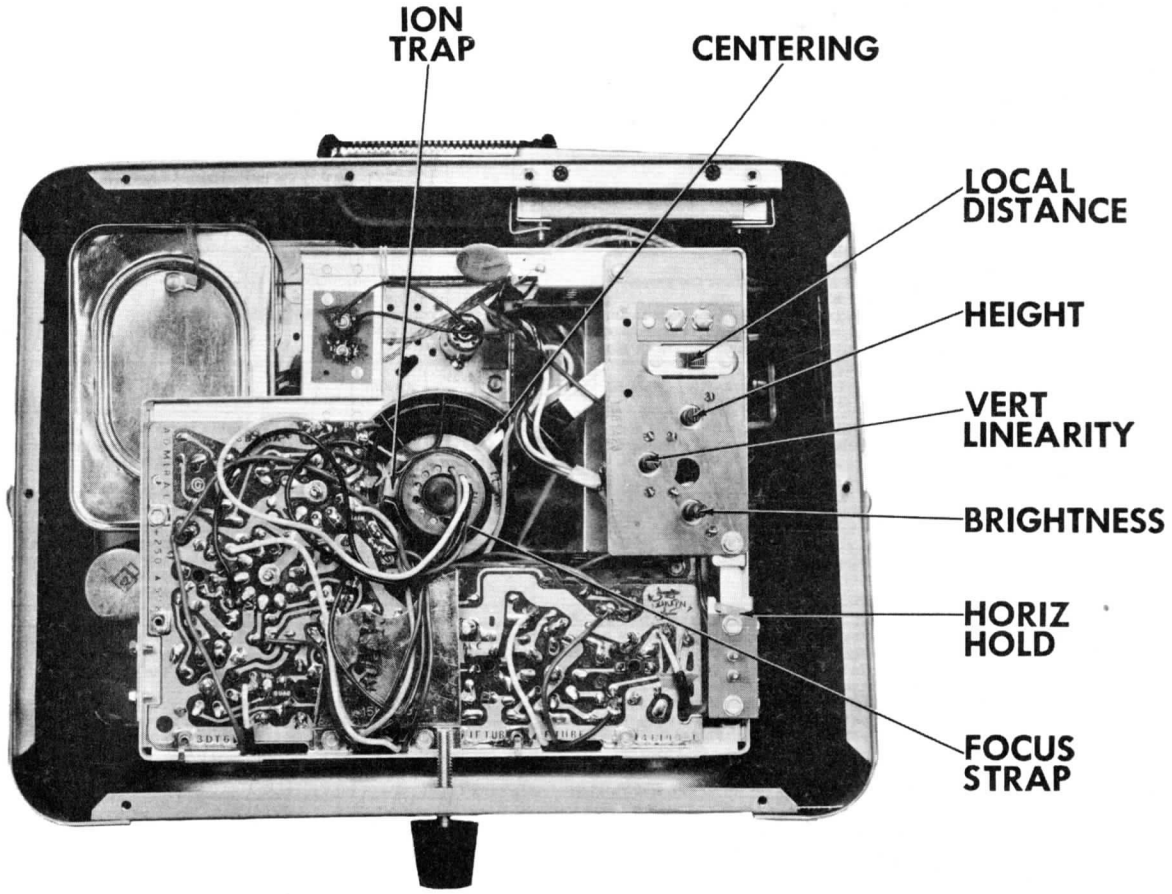

CABINET—REAR VIEW

HORIZONTAL SWEEP CIRCUIT ADJUSTMENTS

1. Turn the set on and tune in a TV station, preferably with a test pattern.

2. Set the brightness and contrast controls for a normal picture.

3. Turn the horizontal hold clockwise until the picture loses sync. It may be necessary to switch off channel and back again for picture to lose sync.

4. Turn the horizontal hold slowly counter clockwise until the picture just falls into sync.

5. Turn to an unused channel. If vertical lines appear near the center of the screen, slowly adjust the horizontal drive trimmer (B1) until white lines disappear.

6. If in step 5 the horizontal drive was adjusted, tune in a TV station and repeat steps 3 and 4. Check horizontal sync by switching off channel and back again.

ALIGNMENT INSTRUCTIONS

ALIGNMENT INSTRUCTIONS—READ CAREFULLY BEFORE ATTEMPTING ALIGNMENT

USE AN ISOLATION TRANSFORMER TO PROTECT THE TEST EQUIPMENT:
The High Voltage lead should be securely taped and kept away from the chassis.
Allow a 20 minute warm-up period for the receiver and test equipment.

VIDEO IF ALIGNMENT

Connect the negative lead of a 2.5 volt bias supply to point Ⓐ. Positive to chassis.
Disconnect the antenna and connect a short across the antenna terminals but do not short to chassis.
Connect a 270MMF capacitor across the input of the VTVM.
Turn the contrast control fully counter clockwise.
Use the lowest DC scale on the VTVM.
Use only enough generator output to provide usable indication on VTVM.

	DUMMY ANTENNA	SIGNAL GENERATOR COUPLING	SIGNAL GENERATOR FREQUENCY	CHANNEL	CONNECT VTVM	ADJUST	REMARKS
1.	Direct	High side to ungrounded tube shield floating over mixer-osc. tube (V2). Low side to chassis.	23.8MC (unmod.)	Any non-interfering channel.	DC probe thru 10K to point Ⓑ. Common to chassis.	A1	Detune A4 by turning slug clockwise until it is approximately 1/8" out of the coil form. Adjust for maximum deflection.
2.	"	"	24.9MC	"	"	A2	Adjust for maximum deflection.
3.	"	"	23.1MC	"	"	A3	"

OVERALL VIDEO IF RESPONSE CHECK

Connect bias as under "Video IF Alignment".
Connect a 270MMF capacitor across the input terminals of the scope.
Leave the contrast control fully counter clockwise.
Connect the synchronized sweep voltage from the sweep generator to the horizontal input of the oscilloscope for horizontal deflection.
The sweep generator output lead should be terminated with its characteristic impedance, usually 50 ohms.
Use only enough sweep generator output to provide usable pattern on scope.

	DUMMY ANTENNA	SWEEP GENERATOR COUPLING	SWEEP GENERATOR FREQUENCY	MARKER GENERATOR FREQUENCY	CHANNEL	CONNECT SCOPE	ADJUST	REMARKS
4.	Direct	High side to ungrounded tube shield floating over mixer-osc. tube (V2). Low side to chassis.	23MC (10MC Swp)	23.5MC	Any non-interfering channel	Vert. Amp. thru 10K to point Ⓑ. Low side to chassis.		Check for response curve similar to Fig. 1 with marker as shown. If necessary, repeat steps 1 thru 3 for desired response.
5.	"	"	"	21.25MC 23.5MC 25.75MC 27.25MC	"	"	A4	Turn A4 counter clockwise to reduce peak and broaden band width of curve to resemble Fig. 2. If necessary, alternately adjust A3 and A4 for proper response curve and proper marker positions. Dotted line in Fig. 2 shows permissable variations.

SOUND IF ALIGNMENT

1. Turn the set on and allow 15 minutes warm-up period. Tune in the strongest TV station in the area. Set all controls for normal operation.
2. Using a non-metalic hexagonal alignment tool, turn A5 very slowly clockwise until a buzz is heard in the sound. Then turn counter clockwise until the loudest and clearest sound is heard. There may be two points at which the sound is loud, (approximately ½ turn apart). The slug should be set at the center of the second point of loud sound noted as the slug is turned clockwise.
3. Using an attenuator between the antenna and antenna terminals reduce the input signal until a considerable amount of hiss is heard in the sound similar to super regeneration. The signal may also be reduced by disconnecting the antenna lead and placing it in the vicinity of the terminals.
4. Carefully adjust A6 for clearest sound and MINIMUM noise in the sound. If the hiss disappears during alignment, reduce the signal still further until the hiss returns.
5. Carefully adjust A7 for the clearest sound and MINIMUM hiss. If this alignment has been carefully made, no further adjustment should be necessary. However, if the sound is still distorted and noisy, repeat the entire alignment.

OSCILLATOR ALIGNMENT FOR TUNERS # 94E119-1 and 94E119-7

Turn the set on and allow 15 to 20 minutes warm up.
1. Set channel selector to the lowest channel operating in the area.
2. Set the fine tuning control to the center of its range.
3. Set other controls for normal picture and sound.
4. Remove channel selector and fine tuning knobs.
5. Using a 1/8 inch blade, non-metalic alignment tool, carefully adjust the oscillator slug for best picture and sound. (This is not necessarily the point of loudest sound.) If two slugs are visible at the front of the tuner, adjust the one nearest the rear of the set. Repeat this procedure for the remaining stations, adjusting them in order of the channel number from the lowest to the highest.

RF AND MIXER ALIGNMENT FOR TUNERS # 94E110-1 and 94E119-7

Connect the negative lead of a 2.5 volt bias supply to point Ⓐ. Positive to chassis.
Disconnect the antenna and set the Local-distant switch to Distant position.
If a separate marker generator is used, loosely couple to the antenna terminals.
Do not remove bottom shield while performing alignment.
Connect the synchronized sweep voltage from the sweep generator to the horizontal input of the oscilloscope for horizontal deflection.
The sweep generator output lead should be terminated with its characteristic impedance, usually 50 ohms.
Use only enough sweep generator output to provide usable indication on VTVM.

	DUMMY ANTENNA	SWEEP GENERATOR COUPLING	SWEEP GENERATOR FREQUENCY	MARKER GENERATOR FREQUENCY	CHANNEL	CONNECT SCOPE	ADJUST	REMARKS
6.	Two 120Ω Carbon Resistors	Across antenna terminals with 120Ω in each lead.	201MC (10MC Swp)	199.25MC 203.75MC	11	Vert. Amp. thru 15K to point Ⓒ. Low side to chassis.	A8, A9	Adjust for maximum gain and symmetry of response similar to Fig. 3 with markers as shown.
7.	"	"	85MC (10MC Swp)	83.25MC 87.75MC	6	"	A10	Adjust for maximum gain and symmetry of response similar to Fig. 3 with markers as shown. Recheck step 6.
8.	"	"	213MC (10MC Swp)	211.25MC 215.75MC	13	"		Check for response similar to Fig. 3. If markers fall below 70% on any high band channel, make compromise adjustment of A8 and A9 with tuner set to that channel. If markers fall below 70% on any low band channel, make compromise adjustment of A10 with tuner set to that channel. Check all other channels to see that they have not been seriously affected.
			207MC (10MC Swp)	205.25MC 209.75MC	12			
			195MC (10MC Swp)	193.25MC 197.75MC	10			
			189MC (10MC Swp)	187.25MC 191.75MC	9			
			183MC (10MC Swp)	181.25MC 185.75MC	8			
			177MC (10MC Swp)	175.25MC 179.75MC	7			
			79MC (10MC Swp)	77.25MC 81.75MC	5			
			69MC (10MC Swp)	67.25MC 71.75MC	4			
			63MC (10MC Swp)	61.25MC 65.75MC	3			
			57MC (10MC Swp)	55.25MC 59.75MC	2			

ALIGNMENT INSTRUCTIONS (cont)

OSCILLATOR ALIGNMENT FOR TUNER # 94E128-1

1. Turn the set on and allow 15 to 20 minutes warm up.
2. Set the channel selector to the highest channel operating in the area. Set other controls for normal picture and sound.
3. Set the fine tuning control at the center of its range by turning in one direction approximately two turns, then in the opposite diresction one quarter turn.
4. Remove channel selector and fine tuning knobs. Remove the control panel door and panel assembly.
5. Using a 1/8th inch blade, non-metallic alignment tool, carefully adjust the proper channel screw for best picture. (Note: this is not the point of loudest sound.) Repeat procedure for remaining channels, making adjustments from the highest channels to the lowest.

RF AND MIXER ALIGNMENT FOR TUNER # 94E128-1

Connect the negative lead of a 3 volt bias supply to point (A). Positive to chassis.
Disconnect the antenna and set the Local-Distant switch to the Distant position.
Connect the synchronized sweep voltage from the sweep generator to the horizontal input of the oscilloscope for horizontal deflection.
The sweep generator output lead should be terminated with its characteristic impedance, usually 50 ohms.
Use only enough sweep generator output to provide usable pattern on scope.

	DUMMY ANTENNA	SWEEP GENERATOR COUPLING	SWEEP GENERATOR FREQUENCY	MARKER GENERATOR FREQUENCY	CHANNEL	CONNECT SCOPE	ADJUST	REMARKS
9.	Two 120Ω Carbon Resistors	Across antenna terminals with 120Ω in each lead.	213MC (10MC Swp)	211. 25MC 215. 75MC	13	Vert. Amp. thru 10K to point (D). Low side to chassis.	A11, A12, A13	Check for response similar to Fig. 3 with markers as shown. A11 is adjusted for maximum amplitude. A12 and A13 are adjusted for proper bandwidth and marker position.
10.	"	"	177MC (10MC Swp)	175. 25MC 179. 75MC	7	"	A14, A15	Adjust for curve similar to Fig. 3.
11.	"	"	213MC (10MC Swp)	211. 25MC 215. 75MC	13	"	A16	Check for response similar to Fig3. If necessary, readjust A13 for proper shape of curve. Adjust A16 (ground lead of capacitor) for proper bandwidth. To broaden bandwidth, move lead nearer mixer ground strap and vice versa.
12.	"	"	177MC (10MC Swp)	175. 25MC 179. 75MC	7	"	A17	Check for response similar to Fig. 3. If bandwidth is too broad, move lead (A17) closer to capacitor body. If too narrow, move lead away from capacitor body. Use care so as not to disturb bandwidth of channels 6 thru 2.
13.	"	"	207MC (10MC Swp)	205. 25MC 209. 75MC	12	"		Check for response similar to Fig. 4 making sure it falls within these limits. If not, make compromise adjustments by repeating steps 9 thru 12 being careful not to disturb other channels in operation.
			201MC (10MC Swp)	199. 25MC 213. 75MC	11			
			195MC (10MC Swp)	193. 25MC 197. 75MC	10			
			189MC (10MC Swp)	187. 25MC 191. 75MC	9			
			183MC (10MC Swp)	181. 25MC 185. 75MC	8			
14.	"	"	85MC (10MC Swp)	83. 25MC 87. 75MC	6	"	*A18 *A19 *A20	Check for response similar to Fig. 3. If necessary, adjust (by compressing or expanding coil turns) coils whose "A" numbers are proceeded by (*) for maximum amplitude. Adjust others for proper tilt and marker positions.
15.	"	"	79MC (10MC Swp)	77. 25MC 81. 75MC	5	"	*A21, A22, A23	"
			69MC (10MC Swp)	67. 25MC 71. 75MC	4		*A24, A25, A26	"
			63MC (10MC Swp)	61. 25MC 65. 75MC	3		*A27, A28, A29	"
			57MC (10MC Swp)	55. 25MC 59. 75MC	2		*A30 A31, A32	"

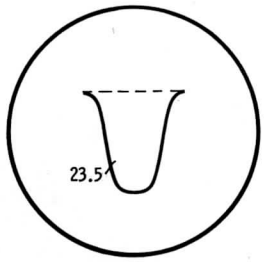

FIG. 1

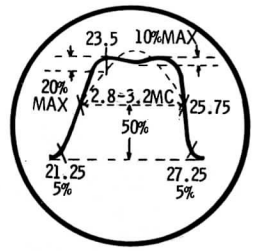

FIG. 2

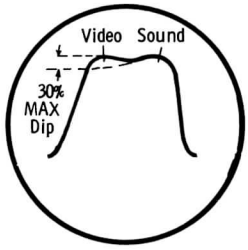

FIG. 3

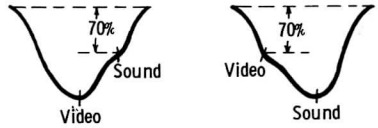

FIG. 4

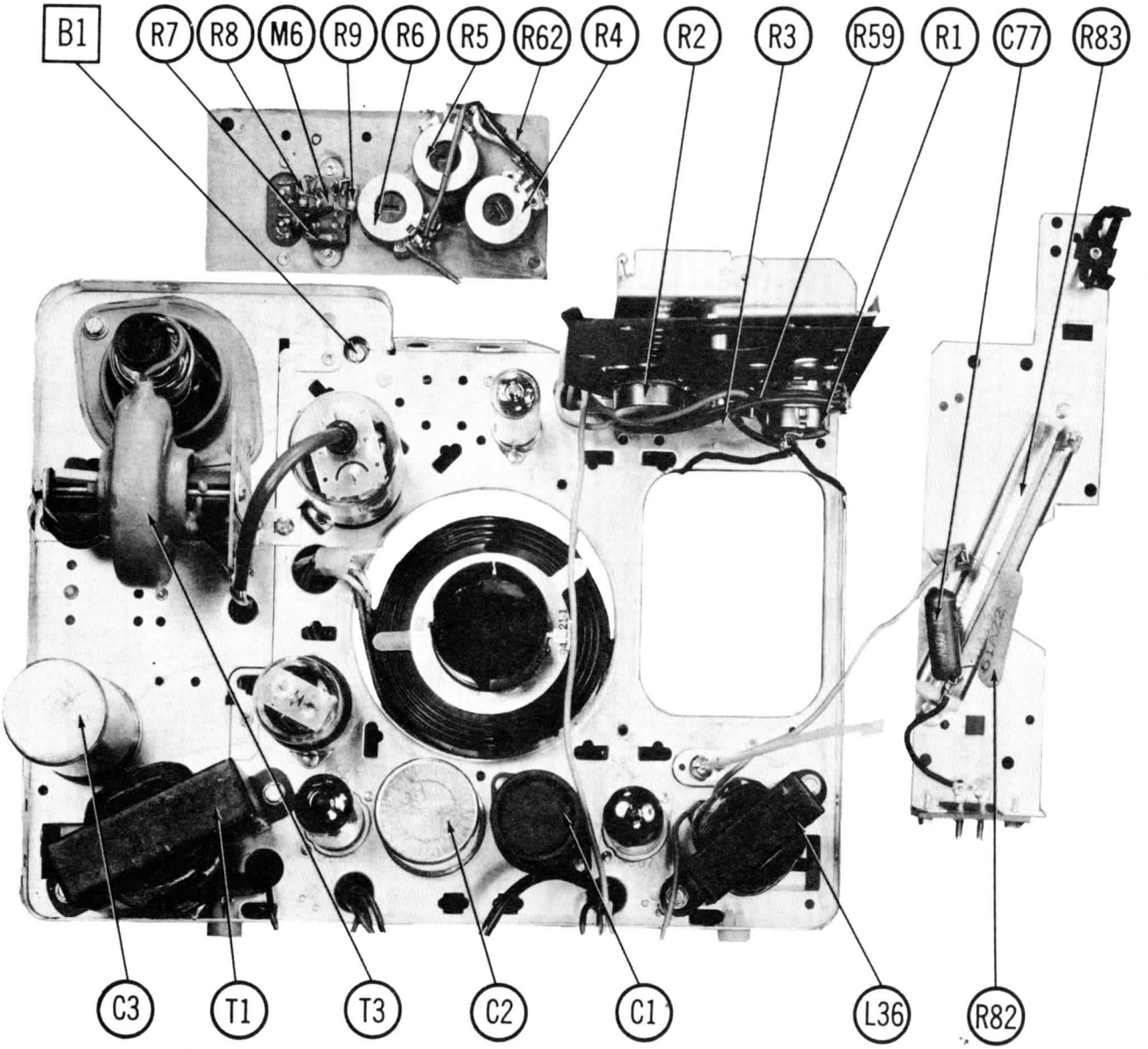

CHASSIS TOP VIEW

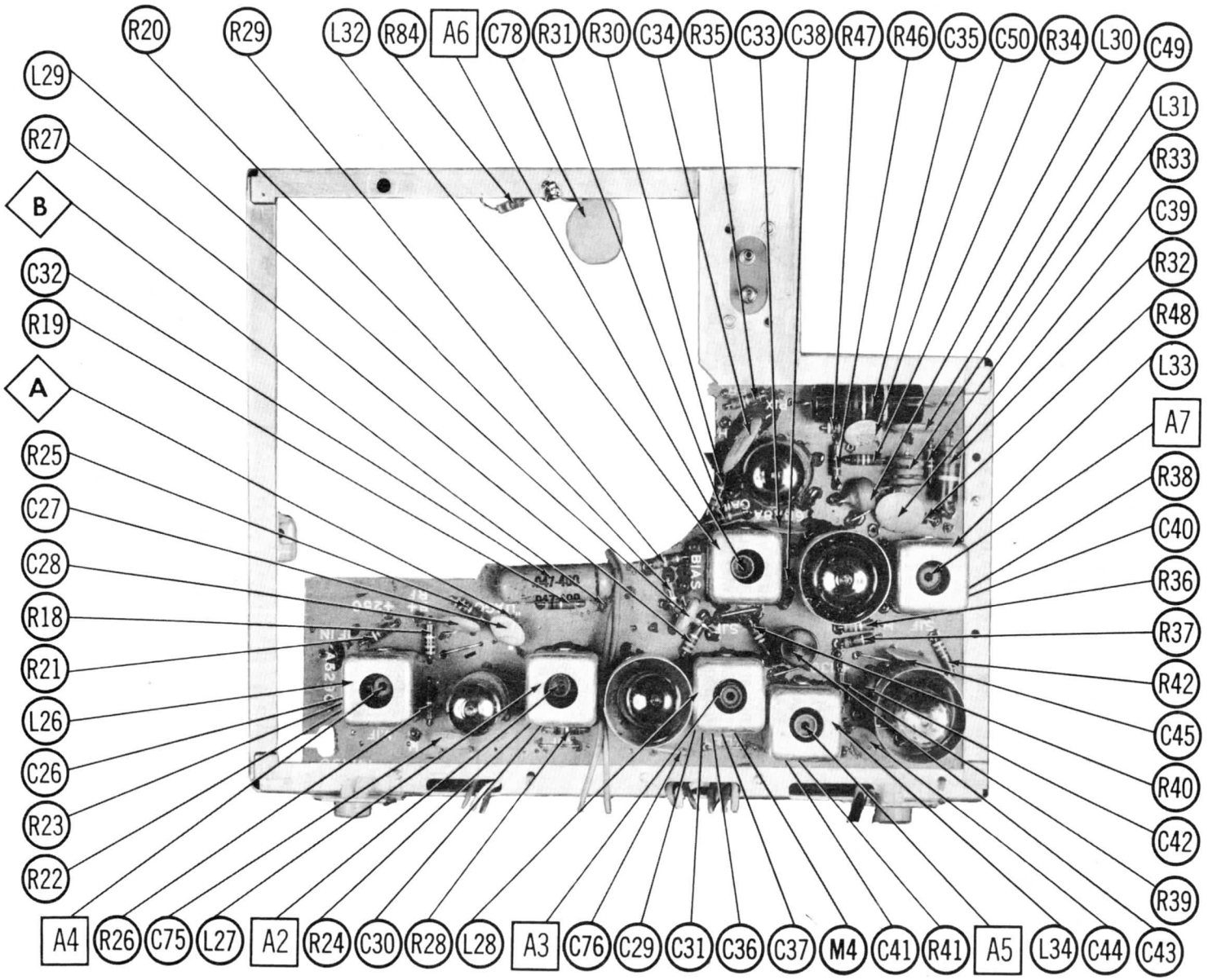

VIDEO IF PRINTED BOARD

ADMIRAL CHASSIS
14YP3D, DK, DM

RESISTANCE MEASUREMENTS

ITEM	TUBE	Pin 1	Pin 2	Pin 3	Pin 4	Pin 5	Pin 6	Pin 7	Pin 8	Pin 9
V1	3BC5	1Meg	0Ω	1.5Ω	2.5Ω	▲ 330Ω	▲ 2500Ω	0Ω		
V2	5J6	■ 10K	■ 8200Ω	3.5Ω	2.5Ω	230K	10K	0Ω		
V3	3CB6	▲ 5600Ω	▲ 68Ω	3.5Ω	4Ω	† 390Ω	† 390Ω	75K		
V4	3CB6	.4Ω	100Ω	4Ω	4.5Ω	■ 330Ω	■ 330Ω	0Ω		
V5	6BA8A	0Ω	2.7Meg	† 60K	9.5Ω	8Ω	● 900Ω	1.1Meg	■ 0Ω	† 6900Ω
V6	5U8	† 10K	3.2Ω	■ 19K	5.5Ω	6.5Ω	■ 1000Ω	120Ω	3000Ω	† 60K
V7	3DT6	4Ω	330Ω	5.5Ω	4.5Ω	† 330K	■ 8200Ω	560K		
V8	12CU5	¶	620K	11Ω	13.5Ω	620K	† 390Ω	† 610Ω		
V9	6CM7	‡ 6000Ω	NC	● 150K	1.5Ω	0Ω	● ‡ 3Meg	220K	1Meg	1500Ω
V10	6CG7	† 5700Ω	550K	1500Ω	11Ω	9.5Ω	† 82K	150K	1500Ω	0Ω
V11	12DQ6A	TP	15Ω	TP	† 10K	420K	TP	13.5Ω	0Ω	TOP CAP ‡ 24Ω
V12	12AX4GTA	TP	TP	¶	NC	† 58Ω	TP	15Ω	18Ω	
V13	1B3GT		PINS	1 THRU 8	HAVE	INFINTE	RESISTANCE			TOP CAP ‡ 474Ω
V14	17AVP4A	8Ω	56K	PIN 6 ‡ 4700Ω	PIN 10 ‡ 4700Ω	PIN 11 130K	PIN 12 6.5Ω			

■ MEASURED FROM 130V SOURCE.
▲ MEASURED FROM PIN 7 OF V3.
† MEASURED FROM OUTPUT OF M2.
‡ MEASURED FROM PIN 3 OF V12.
● THIS READING WILL VARY. CONTROL SET FOR NORMAL OPERATION.
¶ THIS READING CAN VARY GREATLY, (10K MINIMUM), DUE TO THE CONDITION OF THE ELECTROLYTIC CAPACITOR CONNECTED IN THE ASSOCIATED CIRCUIT.
NC NO CONNECTION.
TP TIE POINT

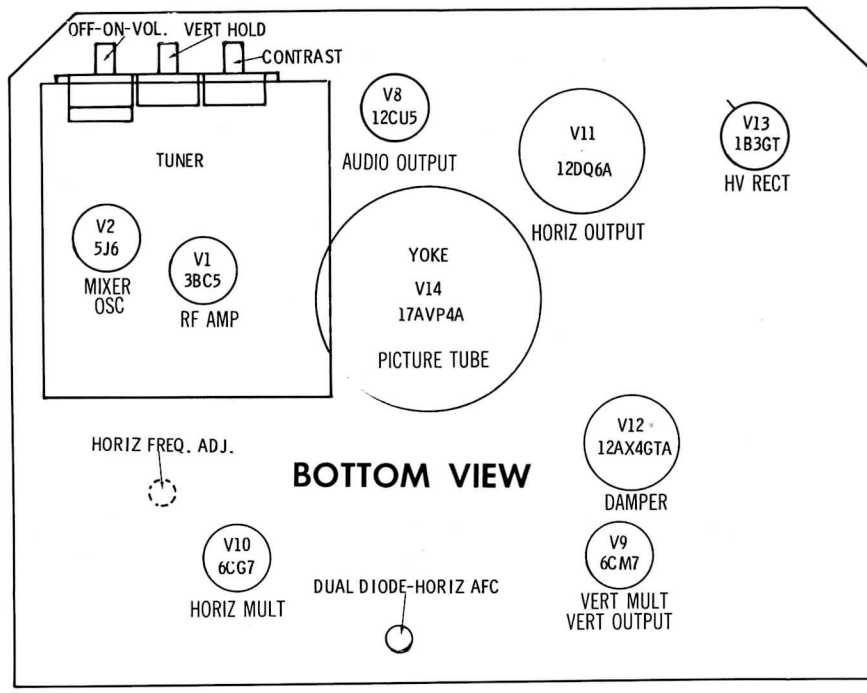

TUBE PLACEMENT CHART

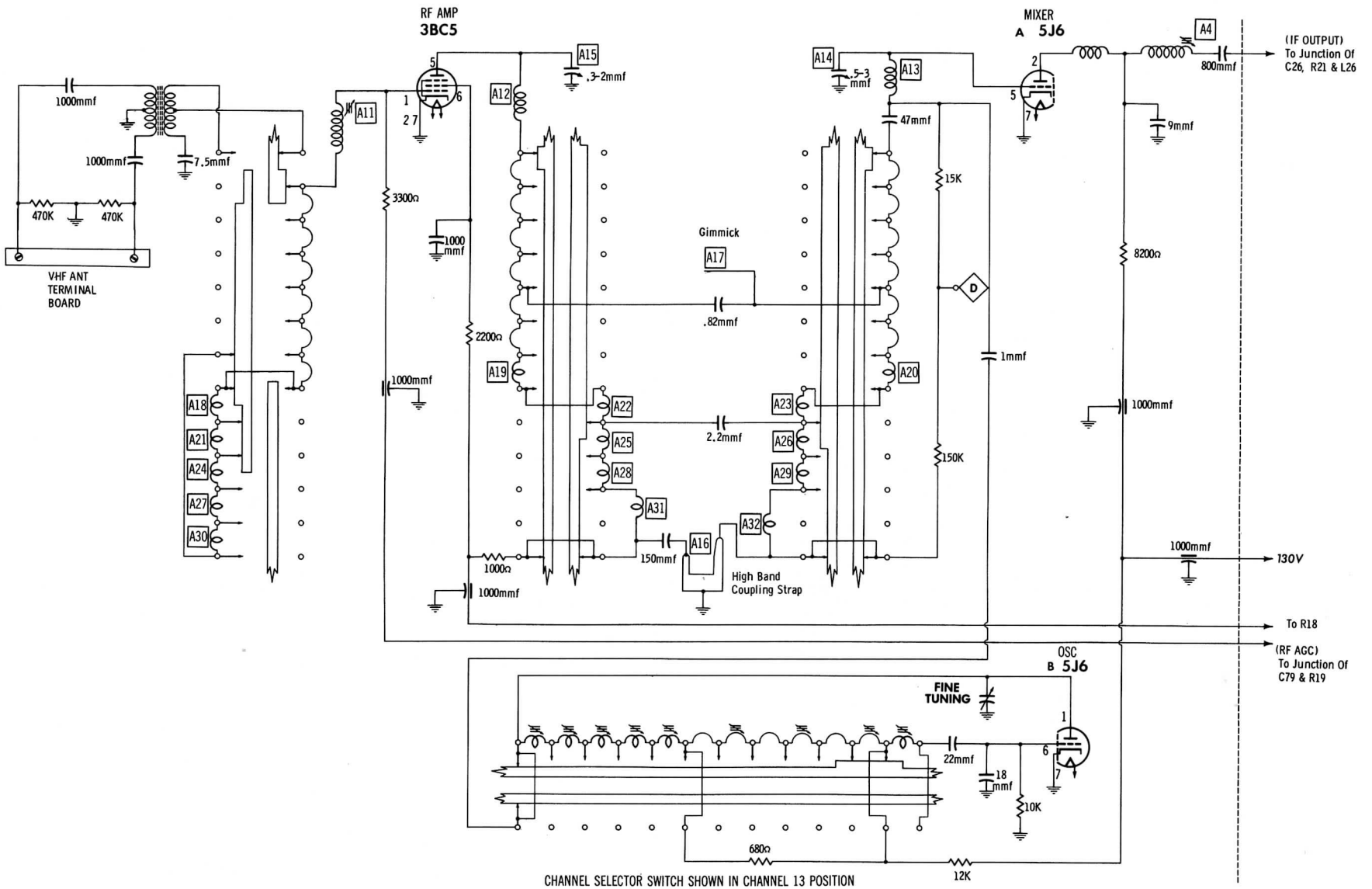

A PHOTOFACT STANDARD NOTATION SCHEMATIC
© Howard W. Sams & Co., Inc. 1957

ALTERNATE TUNER SCHEMATIC

ADMIRAL CHASSIS
14YP3D, DK, DM

PARTS LIST AND

TUBES (GENERAL ELECTRIC, SYLVANIA)

ITEM No.	USE	TYPE	NOTES
V1	RF Amplifier	3BC5	
V2	Mixer-Oscillator	5J6	
V3	1st. Video IF Amp.	3CB6	Note 1
V4	2nd. Video IF Amp.	3CB6	Note 1
V5	Video Output-Sync Sep.	6BA8A	
V6	Sound IF Amp.- Sync Phase Inv.	5U8	

ITEM No.	USE	TYPE	NOTES
V7	Audio Det.	3DT6	
V8	Audio Output	12CU5	
V9	Vert. Mult-Vert. Output	6CM7	
V10	Horiz. Mult.	6CG7	
V11	Horiz. Output	12DQ6A	
V12	Damper	12AX4GTA	
V13	HV Rectifier	1B3GT	

Note 1. A 3DK6 used in later versions.

PICTURE TUBE

ITEM No.	REPLACEMENT DATA: ADMIRAL PART No.	GENERAL ELECTRIC PART No.	SYLVANIA PART No.	NOTES
V14	17AVP4A	17AVP4A ① 17AVP4	17AVP4A ② 17AVP4 17ATP4A ② 17ATP4	① Aluminized ② Silver screen "85"

ELECTROLYTIC CAPACITORS

ITEM No.	RATING: CAP.	VOLT.	ADMIRAL PART No.	AEROVOX PART No.	CORNELL-DUBILIER PART No.	MALLORY PART No.	PYRAMID PART No.	SANGAMO PART No.	SPRAGUE PART No.
C1	100	150	67D15-183	AFH1-21	XA0241	FP116	TMS-22	S-090	TVL-1423
C2	100	300	67D15-134	AFHS1-36-05	AO340	FP129.1	TMS-61	S-190	TVL-1750
C3A	▲100	300	67D15-135	AFH3-101-40	CO230	FP335	TMQ-127	T-375	TVL-4559.5
B	■60	150			BR6015				
C	▲20	50							
C4	40	200	67A25-2	PRS250V40	BR4025	TC58	TD-40-250	FM-2540	TVA-1511
C5	10	500	67A4-34	PRS500V10	BR1250	TC82	TD-10-500	MT-5010	TVA-1963

FIXED CAPACITORS

Capacity values given in the rating column are in mfd. for Paper Capacitors, and in mmfd. for Mica and Ceramic Capacitors.

ITEM No.	RATING: CAP.	VOLT	ADMIRAL PART No.	AEROVOX PART No.	CENTRALAB PART No.	CORNELL-DUBILIER PART No.	ERIE PART No.	MALLORY PART No.	SPRAGUE PART No.	NOTES
C6	5		65D10-108	NP0-SI 5	TCZ-5	C10V5C	TCO-5	ZT-555	5TCCB-V5	10% NP0
C7	6.8		65D10-26	NP0-SI 6.8	TCZ-6R8	C10V68C	TCO-6.8	ZT-5568	5TCCB-V68	10% NP0
C8	6.8		65D10-26	NP0-SI 6.8	TCZ-6R8	C10V68C	TCO-6.8	ZT-5568	5TCCB-V68	10% NP0
C9	2.5-12.5		66A38-5							
C10	.5-3		66A38-6		829-3		3115-D	CT565A	5HK-D1	
C11	1000		65B26-5	EF-001	MFT-1000				503C-D1	
C12	1.5		65B28-015	NP0-SI 1.5	TCZ-1R5	C10V15C	TCO-1.5	ZT-5515	5TCCB-V15	10%
C13	1000		65B26-6	EF-001	MFT-1000				503C-D1	
C14	47		65D10-73							5% N1400
C15	.5-3		66A38-6		829-3		3115-D	CT565A		
C16	10		65D10-50	N750-SI 10	TCN-10	C10Q1U	TC7-10	NT-541	5TCU-Q1	5% N750
C17	5		65D10-22	N750-SI 5	TCN-5	C10V5C	TC7-5	NT-555	5TCU-V5	5% N750
C18	10		65D10-50	N750-SI 10	TCN-10	C10Q1U	TC7-10	NT-541	5TCU-Q1	5% N750
C19	1000		65B26-5	EF-001	MFT-1000				503C-D1	
C20	1000		65B26-5	EF-001	MFT-1000				503C-D1	
C21	800		65D10-20	BPD-0008	DD-801	L10T8	ED-800		5GA-T8	
C22	1000		65B26-5	EF-001	MFT-1000				503C-D1	
C23	800		65D10-20	BPD-0008	DD-801	L10T8	ED-800		5GA-T8	
C24	800		65D10-20	BPD-0008	DD-801	L10T8	ED-800		5GA-T8	Note 1
C25	1000		65B26-5	MFT-001	MFT-1000				503C-D1	
C26	68		65D10-97	NP0-SI 68	TCZ-68	C10Q68C	TCO-68			5% NP0
C27	5000		65D10-5	BPD-005	DD-502	BYA10D5	ED-005	DC525	5HK-D5	
C28	5000		65D10-5	BPD-005	DD-502	BYA10D5	ED-005	DC525	5HK-D5	
C29	5000		65D10-5	BPD-005	DD-502	BYA10D5	ED-005	DC525	5HK-D5	
C30	5000		65D10-5	BPD-005	DD-502	BYA10D5	ED-005	DC525	5HK-D5	
C31	6.8		65B28-068	NP0-SI 6.8	TCZ-6R8	C10V68C	TCO-6.8	ZT-5568	5TCCB-V68	10%
C32	.047	200	64C25-34	BPD-05	DF-503	CUB2S47		GEM-2147	2TM-S47	
C33	10000		65D10-3	BPD-01	DD-103	BYA6S1	ED-01	DC511	5HK-S1	
C34	110				TCZ-110		TCO-110			NP0
C35	.1	400	64C25-32	P488N-1	DF-104	CUB4P1		GEM-401	4TM-P1	
C36	5		65D10-108	NP0-SI 5	TCZ-5	C10V5C	TCO-5	ZT-555	5TCCB-V5	10% NP0
C37	39		65C44-25	NP0-SI 39	TCZ-39	C10Q39C	TCO-39			5% NP0
C38	1000		65D10-6	BPD-001	DD-103	BYA6D1	ED-1000	DC521	5HK-D1	
C39	10000		65C44-2	BPD-001	DD-103	BYA6D1	ED-1000	DC521	5HK-D1	
C40	5000		65D10-5	BPD-005	DD-502	BYA10D5	ED-005	DC525	5HK-D5	
C41	18		65C44-27		TCZ-18	C10Q18C	TCO-18			5% NP0
C42	1000		65D10-53	BPD-001	DD-102	BYA6D1	ED-1000	DC521	5HK-D1	
C43	.047	200	64B16-55	BPD-05	DF-503	BC2S47J		ACE4147	2SE-S47	
C44	5000		65D10-5	BPD-005	DD-502	BYA10D5	ED-005	DC525	5HK-D5	
C45	10000		65C44-2	BPD-01	DD-103	BYA6S1	ED-01	DC511	5HK-S1	
C46	10000		65D10-3	BPD-01	DD-103	BYA6S1	ED-01	DC511	5HK-S1	
C47	330		65D10-118	BPD-00033	DD-331	L10T33	ED-330	UC-5333	5GA-T33	
C48	10000		65D10-3	BPD-01	DD-103	BYA6S1	ED-01	DC511	5HK-S1	
C49	10000		65C44-2	BPD-01	DD-103	BYA6S1	ED-01	DC511	5HK-S1	
C50	150		65C44-9	N750-SI 150	TCN-150	C10T15U	TC7-150		5TCU-T15	10% N750
C51	4700		65D10-112	BPD-0047	DD-472	BYA10D47	ED-0047	UC-5247	5HK-D47	
C52	10000		65C44-2	BPD-01	DD-103	BYA6S1	ED-01	DC511	5HK-S1	
C53	2200		65D10-111	BPD-0022	DD-222	BYA10D22	ED-0022	UC-5222	5GA-D22	
C54	.047	200	64C24-9	BPD-05	DF-503	CUB2S47		GEM-2147	2TM-S47	
C55	.047	400	64C25-34	BPD-05	DF-503	CUB4S47		GEM-4147	4TM-S47	
C56	.033	600	64C24-10	BPD-03	DF-303	CUB6S33		GEM-6133	6TM-S33	
C57	.047	600	64C25-9	BPD-05	DF-503	CUB6S47		GEM-6147	6TM-S47	
C58	.001	1600	64A2-28					GEM-1621		10%
C59	.001	400	64C25-20	BPD-001	DD-102	CUB4D1	GP-1000	GEM-421	4TM-D1	
C60	.001	400	64C25-20	BPD-001	DD-102	CUB4D1	GP-1000	GEM-421	4TM-D1	
C61	4700		65C44-21	BPD-0047	DD-472	BYA10D47	ED-0047	UC-5247	5HK-D47	
C62	.022	200	64C25-86	BPD-02	DD-203	CUB2S22	ED-02	GEM-2122	2TM-S22	
C63	3900		65B21-392	1464-0039		1R5D39			MS-239	10%
C64	390		65B21-391	1469-00039		5R5T39			MS-339	10%
C65	.0047	600	64C25-15	BPD-0047	DD-472	CUB6D47	ED-0047	GEM-6247	6TM-D47	
C66	330		65B21-331	1469-00033		5R5T33			MS-333	10%
C67	178-780		66A30-3							
C68	10000		65D10-41	BPD-01	DD-103	BYA6S1	ED-01	DC511	5HK-S1	
C69	.047	400	64C25-34	BPD-05	DF-503	CUB4S47		GEM-4147	4TM-S47	
C70	.1	600	64C25-7	P688N-1	DF-104	CUB6P1		GEM-601	6TM-P1	
C71	230	3000	65D10-69							5% N1500
C72	150	3000	65D10-68							5% N1500
C73	.047	1000	64A2-30	P1088N-047	DD16-503	CUB10S47		GEM-10147	10TM-S47	
C74	.047	200	64C25-59	BPD-05	DF-503	CUB2S47		GEM-2147	2TM-S47	
C75	5000		65C44-1	BPD-005	DD-502	BYA6S5	ED-005	DC525	5HK-D5	
C76	5000		65C44-1	BPD-005	DD-502	BYA6S5	ED-005	DC525	5HK-D5	
C77	.01	600	64A2-35	BPD-01	DD-103	CUB6S1	ED-01	GEM-611	6TM-S1	Note 2

CAPACITO

ITEM No.	RATING: CAP.	VOLT	ADMIRAL PART No.	AEROVOX PART No.	CENTRALAB PART No.	CO DU PA
C78	10000	1400	65D10-65	P1688N-01	DD16-103	CU
C79	.22	200	64C-25-80	P288N-22		CU

Note 1. Not used in some versions.
Note 2. In chassis stamped Run 18 and higher, a .047MFD ⓐ 100

CONTRO

ITEM No.	RATING: RESISTANCE	WATTS	REPLACEMENT DA: ADMIRAL PART No.	CENTRALAB PART No.	CLAROSTAT PART No.
R1A	330K	½	75C1-87	B-60	A47-500K-Z
B	Shaft			Not Req.	KSS-3
C	Switch			KB-1	SWE-12
R2A	1000Ω	½	75D13-82	AB-505	
B	Shaft			AK-4	
R3A	200K	½	75D13-83	B-46	A47-200K-S
B	Shaft			Not Req.	KSS-3
R4A	100K	½	75C20-44	AB-40	A47-100K-S
B	Shaft			AK-19	RN-3
R5A	3000Ω	½	75C20-42	AB-8	A47-3000-S
B	Shaft			AK-19	RN-3
R6A	2.5Meg	½	75C20-41	AB-83	A47-2.5Meg -S
B	Shaft			AK-19	RN-3

Note 1. Alternate part number 75C20-43.

RESISTORS

All wattages 1/2 watt, or less, unl

ITEM No.	RATING: OHMS	WATT	REPLACEMENT DATA: ADMIRAL PART No.	IRC PART No.	NOTES
R7	470Ω		60B8-471	BTS-470	
R8	330Ω		60B8-331	BTS-330	
R9	330Ω		60B8-331	BTS-330	
R10	680K		60B8-684	BTS-680K	
R11	4700Ω		60B8-472	BTS-4700	
R12	2200Ω		60B8-222	BTS-2200	
R13	10K		60B8-103	BTS-10K	
R14	220K		60B8-224	BTS-220K	
R15	8200Ω 5%		60B7-822	BTS-8200 5%	
R16	10K		60B8-103	BTS-10K	
T17	10K		60B8-103	BTS-10K	
R18	330Ω		60B8-331	BTS-330	
R19	1Meg		60B8-105		
R20	6800Ω		60B8-682	BTS-6800	
R21	150K 5%		60B7-154		
R22	5600Ω		60B8-562		
R23	150K 5%		60B7-154		
R24	18K 5%		60B7-183		
R25	330Ω		60B7-331	BTS-330 5%	Note 1
R26	68Ω		60B28-44	BTS-68	
R27	330Ω		60B8-331	BTS-330	
R28	100Ω		60B8-101	BTS-100	
R29	2.7Meg		60B8-275	BTS-2.7Meg	
R30	1.3Meg 5%		60B7-135	BTS-1.3Meg 5%	
R31	100Ω		60B8-101	BTS-100	
R32	6800Ω	2	60B20-682	BTB-6800	
R33	15K		60B8-153	BTS-15K	
R34	270K		60B8-274	BTS-270K	
R35	120K		60B8-124	BTS-120K	
R36	18K		60B8-183	BTS-18K	
R37	1000Ω		60B8-102	BTS-1000	
R38	120Ω		60B8-121	BTS-120	
R39	8200Ω		60B8-822	BTS-8200	
R40	560K		60B8-564	BTS-560K	
R41	100K 5%		60B7-104	BTS-100K 5%	
R42	330Ω 5%		60B7-331	BTS-330 5%	
R43	1.3Meg 5%		60B7-135	BTS-1.3Meg 5%	
R44	1.3Meg 5%		60B7-135	BTS-1.3Meg 5%	

Note 1. Manufacturer recomm

TRANSFORMERS (SWE

ITEM No.	USE	REP: ADMIRAL PART No.	Halldorson PART No.	Merit PART No.	T
T1	Vert. Output	79B43-10	Z1807 ①	A-2824	2
T2A	Yoke-Horiz. (18MH)	94D87-16	DF607②③	MDF-92	2
B	(90°) Vert. (37MH)			②③	
T3	Horiz. Output	79D74-2		HVO-135	
	Alt. Horiz. Output	79C60-11			
	Alt. Horiz. Output	79C60-10			

① Drill new mounting hole(s). Cut and tape blanking lead.
② Use original rear cover and centering device.
③ Use original horizontal damping network.
④ Trim terminal board to duplicate original and use original mount
§ This part may be superceded by Parts Manufacturer's introducti

*HORIZONTAL OUTPUT TRANSFO

Use Original Width Coil Unless Re

	ORIGINAL TERMINAL CONNECTIONS	Halldorson Replacement Connections	Merit Replacement Connections	RCA Replacement Connections
	4			
	2			
	1			

PARTS LIST AND DESCRIPTIONS

CAPACITORS (cont)

ITEM No.	RATING CAP.	RATING VOLT	REPLACEMENT DATA ADMIRAL PART No.	AEROVOX PART No.	CENTRALAB PART No.	CORNELL-DUBILIER PART No.	ERIE PART No.	MALLORY PART No.	SPRAGUE PART No.	NOTES
C78	10000	1400	65D10-65	P1688N-01	DD16-103	CUB16S1		GEM-1611	16TM-S1	
C79	.22	200	64C-25-80	P288N-22		CUB2P22		GEM-2022	2TM-P22	

Note 1. Not used in some versions.
Note 2. In chassis stamped Run 18 and higher, a .047MFD @ 1000V is used in this application.

CONTROLS

ITEM No.	RATING RESISTANCE	RATING WATTS	REPLACEMENT DATA ADMIRAL PART No.	CENTRALAB PART No.	CLAROSTAT PART No.	IRC PART No.	MALLORY PART No.	INSTALLATION NOTES
R1A	330K	½	75C1-87	B-60	A47-500K-Z	Q13-132	U48	Volume
B	Shaft			Not Req.	KSS-3	Not Req.	Not Req.	
C	Switch			KB-1	SWE-12	76-1	US-26	
R2A	1000Ω	½	75D13-82	AB-505		Q17-108	U3	Contrast
B	Shaft			AK-4		Not Req.	Not Req.	
R3A	200K	½	75D13-83	B-46	A47-200K-S	Q11-129	U43	Vert. Hold
B	Shaft			Not Req.	KSS-3	Not Req.	Not Req.	
R4A	100K	½	75C20-44	AB-40	A47-100K-S	Q11-128	PTA15L	Brightness - Note 1
B	Shaft			AK-19	RN-3	TQ	Not Req.	
R5A	3000Ω	½	75C20-42	AB-8	A47-3000-S	Q11-112	SU-8	Vert. Lin.
B	Shaft			AK-19	RN-3	TQ	Not Req.	
R6A	2.5Meg	½	75C20-41	AB-83	A47-2.5Meg -S	Q11-239	SU-565	Height
B	Shaft			AK-19	RN-3	TQ	Not Req.	

Note 1. Alternate part number 75C20-43.

RESISTORS

All wattages 1/2 watt, or less, unless otherwise listed.

ITEM No.	RATING OHMS	RATING WATT	REPLACEMENT DATA ADMIRAL PART No.	IRC PART No.	NOTES
R7	470Ω		60B8-471	BTS-470	
R8	330Ω		60B8-331	BTS-330	
R9	330Ω		60B8-331	BTS-330	
R10	680K		60B8-684	BTS-680K	
R11	4700Ω		60B8-472	BTS-4700	
R12	2200Ω		60B8-222	BTS-2200	
R13	10K		60B8-103	BTS-10K	
R14	220K		60B8-224	BTS-220K	
R15	8200Ω 5%		60B7-822	BTS-8200 5%	
R16	10K		60B8-103	BTS-10K	
T17	10K		60B8-103	BTS-10K	
R18	330Ω		60B8-331	BTS-330	
R19	1Meg		60B8-105		
R20	6800Ω		60B8-682	BTS-6800	
R21	150K 5%		60B7-154		
R22	5600Ω		60B8-562		
R23	150K 5%		60B7-154		
R24	18K 5%		60B7-183		
R25	330Ω		60B7-331	BTS-330 5%	Note 1
R26	68Ω		60B28-44	BTS-68	
R27	330Ω		60B8-331	BTS-330	
R28	100Ω		60B8-101	BTS-100	
R29	2.7Meg		60B8-275	BTS-2.7Meg	
R30	1.3Meg 5%		60B7-135	BTS-1.3Meg 5%	
R31	100Ω		60B8-101	BTS-100	
R32	6800Ω	2	60B20-682	BTB-6800	
R33	15K		60B8-153	BTS-15K	
R34	270K		60B8-274	BTS-270K	
R35	120K		60B8-124	BTS-120K	
R36	18K		60B8-183	BTS-18K	
R37	1000Ω		60B8-102	BTS-1000	
R38	120Ω		60B8-121	BTS-120	
R39	8200Ω		60B8-822	BTS-8200	
R40	560K		60B8-564	BTS-560K	
R41	100K 5%		60B7-104	BTS-100K 5%	
R42	330Ω 5%		60B7-331	BTS-330 5%	
R43	1.3Meg 5%		60B7-135	BTS-1.3Meg 5%	
R44	1.3Meg 5%		60B7-135	BTS-1.3Meg 5%	

ITEM No.	RATING OHMS	RATING WATT	REPLACEMENT DATA PART No.	IRC PART No.	NOTES
R45	330Ω	2	60B20-331	BTB-330	
R46	2.7Meg		60B8-275	BTS-2.7Meg	
R47	47K		60B8-473	BTS-47K	
R48	330K		60B8-334	BTS-330K	
R49	6800Ω		60B8-682	BTS-6800	
R50	3300Ω		60B8-332	BTS-3300	
R51	47K	2	60B20-473	BTB-47K	
R52	3300Ω		60B8-332	BTS-3300	
R53	15K		60B8-153	BTS-15K	
R54	15K		60B8-153	BTS-15K	
R55	220K		60B8-224	BTS-220K	
R56	220K		60B8-224	BTS-220K	
R57	15K		60B8-153	BTS-15K	
R58	2.2Meg		60B8-225	BTS-2.2Meg	
R59	56K		60B8-563	BTS-56K	
R60	1Meg		60B8-105	BTS-1Meg	
R61	4700Ω	2	60B20-472	BTB-4700	
R62	820Ω		60B8-821	BTS-820	
R63	560Ω		60B8-561		
R64	560Ω		60B8-561		
R65	100K 5%		60B7-104		
R66	100K 5%		60B7-104		
R67	470K		60B8-474		
R68	4.7Meg		60B8-475		
R69	5600Ω		60B8-562	BTS-5600	
R70	150K		60B8-154	BTS-150K	
R71	82K		60B8-823		
R72	5600Ω		60B8-562		
R73	1500Ω		60B8-152	BTS-1500	
R74	11Meg 5%		60B7-116	BTS-11Meg 5%	
R75	100Ω		60B8-101	BTS-100	
R76	470K		60B8-474	BTS-470K	
R77	100Ω		60B8-101	BTS-100	
R78	10K	10	61B20-3	PW10-10K	
R79	2200Ω		60B8-222		
R80	22Ω	1	60B14-220		
R81	4.7Ω 5%		60B28-11	BW½-4.7 5%	
R82	10Ω	5	61A22		
R83	54Ω	20	61B3-27		
R84	470K		60B8-474	BTS-470K	

Note 1. Manufacturer recommends 5% replacement.

TRANSFORMERS (SWEEP CIRCUITS)

ITEM No.	USE	REPLACEMENT DATA ADMIRAL PART No.	Halldorson PART No.	Merit PART No.	RCA TYPE No.	Ram PART No.	Stancor PART No.	Thordarson PART No.	Triad PART No.
T1	Vert. Output	79B43-10	Z1807 ①	A-2824	226T1	V315 ①	A-8141	26S54	A-119X
T2A	Yoke-Horiz. (18MH)	94D87-16	DF607②③	MDF-92	235D1 ②	Y90F19/43	DY-16A	Y-16 ②③	Y-41 &
B	(90°) Vert. (37MH)			②③	③	②③	②③		NW2 ②
T3	Horiz. Output	79D74-2		HVO-135		X135 ④* §	HO-254 ④ * §	FLY-107 ④ *§	
	Alt. Horiz. Output	79C60-11							
	Alt. Horiz. Output	79C60-10							

① Drill new mounting hole(s). Cut and tape blanking lead.
② Use original rear cover and centering device.
③ Use original horizontal damping network.
④ Trim terminal board to duplicate original and use original mounting brackets.
§ This part may be superceded by Parts Manufacturer's introduction of special unit for this application.

*HORIZONTAL OUTPUT TRANSFORMER CONNECTION DATA

Use Original Width Coil Unless Replacement Type Is Listed

	ORIGINAL TERMINAL CONNECTIONS	Halldorson Replacement Connections	Merit Replacement Connections	RCA Replacement Connections	Ram Replacement Connections	Stancor Replacement Connections	Thordarson Replacement Connections	Triad Replacement Connections
	4				3	3	3	
	2				6	6	6	
	1				1	1	1	

TYPE	NOTES
3DT6	
12CU5	
6CM7	
6CG7	
12DQ6A	
12AX4GTA	
1B3GT	

NGAMO ART No.	SPRAGUE PART No.
90	TVL-1423
90	TVL-1750
75	TVL-4559.5
-2540	TVA-1511
-5010	TVA-1963

ber

SPRAGUE PART No.	NOTES
5TCCB-V5	10% NP0
5TCCB-V68	10% NP0
5TCCB-V68	10% NP0
5HK-D1	
503C-D1	
5TCCB-V15	10%
503C-D1	
	5% N1400
5TCU-Q1	5% N750
5TCU-V5	5% N750
5TCU-Q1	5% N750
503C-D1	
503C-D1	
5GA-T8	
503C-D1	
5GA-T8	
5GA-T8	Note 1
503C-D1	
	5% NP0
5HK-D5	
5HK-D5	
5HK-D5	
5HK-D5	
5TCCB-V68	10%
2TM-S47	
5HK-S1	
	NP0
4TM-P1	
5TCCB-V5	10% NP0
	5% NP0
5HK-D1	
5HK-D1	
5HK-D5	
	5% NP0
5HK-D1	
2SE-S47	
5HK-D5	
5HK-S1	
5HK-S1	
5GA-T33	
5HK-S1	
5HK-S1	
5TCU-T15	10% N750
5HK-D47	
5HK-S1	
5GA-D22	
2TM-S47	
4TM-S47	
6TM-S33	
6TM-S47	
	10%
4TM-D1	
4TM-D1	
5HK-D47	
2TM-S22	
MS-239	10%
MS-339	10%
6TM-D47	
MS-333	10%
5HK-S1	
4TM-S47	
6TM-P1	
	5% N1500
	5% N1500
10TM-S47	
2TM-S47	
5HK-D5	
5HK-D5	
6TM-S1	Note 2

TRANS

ITEM No.	IMPEDANCE PRI.	IMPEDANCE SEC.	ADMIRAL PART No.	Halldors PART N
T4	2700Ω	3-4Ω	79D33-14	Z1103 ①

ITEM No.	TYPE SIZE	TYPE FIELD	TYPE V. C. IMP.	REPLAC ADMIRA PART N
SP1	4"	PM	3-4Ω	78B126-1

ITEM No.	USE	ADMIRAL PART No.	
L1	Ant. Trans.	AB327	Incl C6,
L2	Ant. Coils	73D30-12	Cha
L3	Ant. Coils	73D30-17	Cha
L4	Ant. Coils	73D30-18	Cha
L5	Ant. Coil	73D30-21	Cha
L6	Ant. Coil	73D30-22	Cha
L7	RF Coils	73D30-19	Cha
L8	RF Coil	73D30-27	Cha
L9	RF Coil	73D30-8	Cha
L10	RF Coil	73D30-5	Cha
L11	RF Coil	73D30-25	Cha
L12	Osc. Coils	73D30-11	Cha
L13	Osc. Coil	73D30-15	Cha

ITEM No.	USE	ADMIRAL PART No.
L26	1st. Video IF	72C132-17
L27	2nd. Video IF	72C132-8
L28	3rd. Video IF	72C176-3
L29	Series Peaking Coil	73B5-8
L30	Series Peaking Coil	73B25-9
L31	Shunt Peaking Coil	73B11-1
L32	1st. Sound IF	72C132-20
L33	2nd. Sound IF	72C132-19
L34	Quadrature Coil	72C132-18

▲ Parallel with 22K resistor.

TRA

ITEM No.	DC RES. PRI.	DC RES. SEC.	ADMIRAL PART No.	MEIS PART
L35	98Ω		94C17-7	19-1

* Enlarge mounting hole.

ITEM No.	RATINGS TOTAL DIRECT CURRENT	RATINGS D. C. RESISTANCE	RATINGS INDUCTANCE (0 CURRENT 1000 ∿)
L36	.160A	58Ω	1.4 HY.

COM

ITEM No.	USE	
K1	Vert. Blanking	10000M 56K, 27

ITEM No.	RATING CURRENT (Measured)	ADMIRAL PART No.	FE PA
M1	.160A	93A4-2 ①	1090
M2	.160A	93A4-2 ①	1090
M3		93A5-2 ①③	1215

① Selenium Type. ② Ge

C

ITEM No.	ORIG. TYPE	REPLACEMEN ADMIRAL PART No.	CBS PART N
M4	1N295		1N60

AND DESCRIPTIONS

ACITORS (cont)

ALAB No.	REPLACEMENT DATA: CORNELL-DUBILIER PART No.	ERIE PART No.	MALLORY PART No.	SPRAGUE PART No.	NOTES
103	CUB16S1 CUB2P22		GEM-1611 GEM-2022	16TM-S1 2TM-P22	

) ⓐ 1000V is used in this application.

NTROLS

ENT DATA: OSTAT T No.	IRC PART No.	MALLORY PART No.	INSTALLATION NOTES
00K-Z	Q13-132	U48	Volume
	Not Req.	Not Req.	
12	76-1	US-26	
	Q17-108	U3	Contrast
	Not Req.	Not Req.	
00K-S	Q11-129	U43	Vert. Hold
	Not Req.	Not Req.	
00K-S	Q11-128	PTA15L	Brightness - Note 1
	TQ	Not Req.	
000-S	Q11-112	SU-8	Vert. Lin.
	TQ	Not Req.	
2.5Meg -S	Q11-239	SU-565	Height
	TQ	Not Req.	

STORS

ss, unless otherwise listed.

ITEM No.	RATING: OHMS	RATING: WATT	REPLACEMENT DATA: PART No.	REPLACEMENT DATA: IRC PART No.	NOTES
R45	330Ω	2	60B20-331	BTB-330	
R46	2.7Meg		60B8-275	BTS-2.7Meg	
R47	47K		60B8-473	BTS-47K	
R48	330K		60B8-334	BTS-330K	
R49	6800Ω		60B8-682	BTS-6800	
R50	3300Ω		60B8-332	BTS-3300	
R51	47K	2	60B20-473	BTB-47K	
R52	3300Ω		60B8-332	BTS-3300	
R53	15K		60B8-153	BTS-15K	
R54	15K		60B8-153	BTS-15K	
R55	220K		60B8-224	BTS-220K	
R56	220K		60B8-224	BTS-220K	
R57	15K		60B8-153	BTS-15K	
R58	2.2Meg		60B8-225	BTS-2.2Meg	
R59	56K		60B8-563	BTS-56K	
R60	1Meg		60B8-105	BTS-1Meg	
R61	4700Ω	2	60B20-472	BTB-4700	
R62	820Ω		60B8-821	BTS-820	
R63	560Ω		60B8-561		
R64	560Ω		60B8-561		
R65	100K 5%		60B7-104		
R66	100K 5%		60B7-104		
R67	470K		60B8-474		
R68	4.7Meg		60B8-475		
R69	5600Ω		60B8-562	BTS-5600	
R70	150K		60B8-154	BTS-150K	
R71	82K		60B8-823		
R72	5600Ω		60B8-562		
R73	1500Ω		60B8-152	BTS-1500	
R74	11Meg 5%		60B7-116	BTS-11Meg 5%	
R75	100Ω		60B8-101	BTS-100	
R76	470K		60B8-474	BTS-470K	
R77	100Ω		60B8-101	BTS-100	
R78	10K	10	61B20-3	PW10-10K	
R79	2200Ω		60B8-222		
R80	22Ω	1	60B14-220		
R81	4.7Ω 5%		60B28-11	BW½-4.7 5%	
R82	10Ω	5	61A22		
R83	54Ω	20	61B3-27		
R84	470K		60B8-474	BTS-470K	

recommends 5% replacement.

(SWEEP CIRCUITS)

REPLACEMENT DATA: erit T No.	RCA TYPE No.	Ram PART No.	Stancor PART No.	Thordarson PART No.	Triad PART No.
324 7-92 ③ -135	226T1 235D1 ② ③	V315 ① Y90F19/43 ②③ X135 ④* §	A-8141 DY-16A ②③ HO-254 ④ * §	26S54 Y-16 ②③ FLY-107 ④ *§	A-119X Y-41 & NW2 ②

nal mounting brackets.
introduction of special unit for this application.

RANSFORMER CONNECTION DATA

Unless Replacement Type Is Listed

RCA acement nections	Ram Replacement Connections	Stancor Replacement Connections	Thordarson Replacement Connections	Triad Replacement Connections
	3	3	3	
	6	6	6	
	1	1	1	

TRANSFORMER (AUDIO OUTPUT)

ITEM No.	IMPEDANCE: PRI.	IMPEDANCE: SEC.	REPLACEMENT DATA: ADMIRAL PART No.	Halldorson PART No.	Merit PART No.	Stancor PART No.	Thordarson PART No.	Triad PART No.	NOTES
T4	2700Ω	3-4Ω	79D33-14	Z1103 ①②	A-3025	A-3332	26S58 ①	S-12X	① Drill one new mounting hole. ② Tape tap on primary winding.

SPEAKER

ITEM No.	TYPE: SIZE	TYPE: FIELD	TYPE: V. C. IMP.	REPLACEMENT DATA: ADMIRAL PART No.	REPLACEMENT DATA: QUAM PART No.	NOTES
SP1	4"	PM	3-4Ω	78B126-1	4A07	

COILS (RF-IF)

ITEM No.	USE	ADMIRAL PART No.	NOTES
L1	Ant. Trans.	AB327	Includes R10, C6, C7 and C8
L2	Ant. Coils	73D30-12	Channels 2-5
L3	Ant. Coils	73D30-17	Channel 6
L4	Ant. Coils	73D30-18	Channels 7-9
L5	Ant. Coil	73D30-21	Channels 10, 11
L6	Ant. Coil	73D30-22	Channels 12, 13
L7	RF Coils	73D30-19	Channels 2-5
L8	RF Coil	73D30-27	Channel 6
L9	RF Coil	73D30-8	Channels 7-9
L10	RF Coil	73D30-5	Channels 10, 11
L11	RF Coil	73D30-25	Channels 12, 13
L12	Osc. Coils	73D30-11	Channels 2, 3
L13	Osc. Coil	73D30-15	Channel 4

ITEM No.	USE	ADMIRAL PART No.	NOTES
L14	Osc. Coil	73D30-10	Channel 5
L15	Osc. Coil	73D30-14	Channel 6
L16	Osc. Coil	73D30-6	Channels 7-9
L17	Osc. Coil	73D30-9	Channels 10, 11
L18	Osc. Coil	73D30-1	Channels 12, 13
L19	Mixer Grid Coils	73D30-20	Channels 2-5
L20	Mixer Grid Coil	73D30-26	Channel 6
L21	Mixer Grid Coil	73D30-7	Channels 7-9
L22	Mixer Grid Coil	73D30-4	Channels 10, 11
L23	Mixer Grid Coil	73D30-3	Channels 12, 13
L24	RF Choke	73D30-16	
L26	Mixer Plate Coil	72A180	

ITEM No.	USE	REPLACEMENT DATA: ADMIRAL PART No.	MEISSNER PART No.	MERIT PART No.	MILLER PART No.	NOTES
L26	1st. Video IF	72C132-17				
L27	2nd. Video IF	72C132-8				
L28	3rd. Video IF	72C176-3				Includes C31, M4, and choke (Part #73A24-8)
L29	Series Peaking Coil	73B5-8	19-4250	TV-187	1630 ▲	271 Microhenries, wound on 22K resistor
L30	Series Peaking Coil	73B25-9				Wound on 33K resistor
L31	Shunt Peaking Coil	73B11-1	19-3660 *		6148 *	695 Microhenries, wound on 10K resistor
L32	1st. Sound IF	72C132-20				
L33	2nd. Sound IF	72C132-19				Includes Cap.
L34	Quadrature Coil	72C132-18				Includes resistor and cap.

▲ Parallel with 22K resistor. * Parallel with 10K resistor.

TRANSFORMER (HORIZ. OSC.)

ITEM No.	DC RES.: PRI.	DC RES.: SEC.	REPLACEMENT DATA: ADMIRAL PART No.	MEISSNER PART No.	MERIT PART No.	MILLER PART No.	RCA TYPE No.	Ram PART No.	Thordarson PART No.	NOTES
L35	98Ω		94C17-7	19-1576 *	TV-163 *	6210 *			HS-5 *	18.4-45 Millihenries

* Enlarge mounting hole.

FILTER CHOKE

ITEM No.	RATINGS: TOTAL DIRECT CURRENT	RATINGS: D.C. RESISTANCE	RATINGS: INDUCTANCE (0 CURRENT 1000 ∿)	REPLACEMENT DATA: ADMIRAL PART No.	Halldorson PART No.	Merit PART No.	Stancor PART No.	Thordarson PART No.	Triad PART No.
L36	.160A	58Ω	1.4 HY.	74B18-19	C5040	C-2994	C-2327	26C41	C-24X

COMPONENT COMBINATIONS

ITEM No.	USE	DESCRIPTION	ADMIRAL PART No.	REPLACEMENT DATA
K1	Vert. Blanking	10000MMF, 10000MMF, 56K, 2700Ω	63C6-12	

RECTIFIERS

ITEM No.	RATING: CURRENT (Measured)	REPLACEMENT DATA: ADMIRAL PART No.	FEDERAL PART No.	GENERAL ELECTRIC PART No.	INTERNATIONAL PART No.	MALLORY PART No.	SARKES TARZIAN PART No.	NOTES
M1	.160A	93A4-2 ①	1090A ①	1N1005 ②	RS300SL ①	6S300 ①	300 ①	
M2	.160A	93A4-2 ①	1090A ①	1N1005 ②	RS300SL ①	6S300 ①	300 ①	
M3		93A5-2 ①③	1215 ①④		1T1 ①④			

① Selenium Type. ② Germanium Type. ③ Horiz. Phase Det. ④ 2 Required.

CRYSTAL DIODES

ITEM No.	ORIG. TYPE	REPLACEMENT DATA: ADMIRAL PART No.	CBS PART No.	SYLVANIA PART No.	NOTES
M4	1N295		1N60	1N60	Video Det. (Pigtail)

PARTS LIST AND DESCRIPTIONS (Continued)

MISCELLANEOUS

ITEM No.	PART NAME	ADMIRAL PART No.	NOTES
M5	Tuner	94E119-1	VHF - Ch. 14YP3D
	Tuner	94E119-7	VHF - Ch. 14YP3DK
	Tuner	94D128-1	VHF - Ch. 14YP3DM
M6	Switch	77B59-3	Local-Distant-Slide Type (DPDT)
M7	Centering Device	94A121-1	Includes rear yoke cover
M8	Ion Trap	94A15-5	
	Printed Board	A5291	Sync and sweep, complete with components, less tubes - Include run number when ordering
	Printed Board	A5290	Video and audio, complete with components, less tubes - Include run number when ordering

CABINETS & CABINET PARTS

(When Ordering Cabinets & Cabinet Parts, Specify Model, Chassis & Color)

NAME	PART NO.	DESCRIPTION
Safety Glass	21D93-1	Clear - Models T170, T171, T171N, T1710
Safety Glass	21D93-2	Tinted - Models T172AL, T173AL
Bezel	23E275-5	Model T170
Bezel	23E275-1	Models T171, T171N
Bezel	23E275-2	Model T172AL
Bezel	23E275-3	Model T173AL
Bezel	23E275-6	Model T1710
Knob	33D202-20	Channel Selector - Models T170, T171, T171N, T1710
Knob	33D202-22	Channel Selector - Models T172AL, T173AL
Knob	33D202-24	Fine Tuning - Models T170, T171, T171N, T1710
Knob	33D202-25	Fine Tuning - Models T172AL, T173AL
Knob	33A175-2	On-off-volume, contrast, vert. hold - Models T170, T171, T171N, T1710
Knob	33A175-4	On-off-volume, contrast, vert. hold - Models T172AL, T173AL
Cabinet	34E109-5	Coppertone - Model T170
Cabinet	34E109-1	Silver - Models T171, T171N
Cabinet	34E109-2	Green-white - Model T172AL
Cabinet	34E109-3	Gray-silver - Model T173AL
Cabinet	34E109-6	Bronze - Model T1710

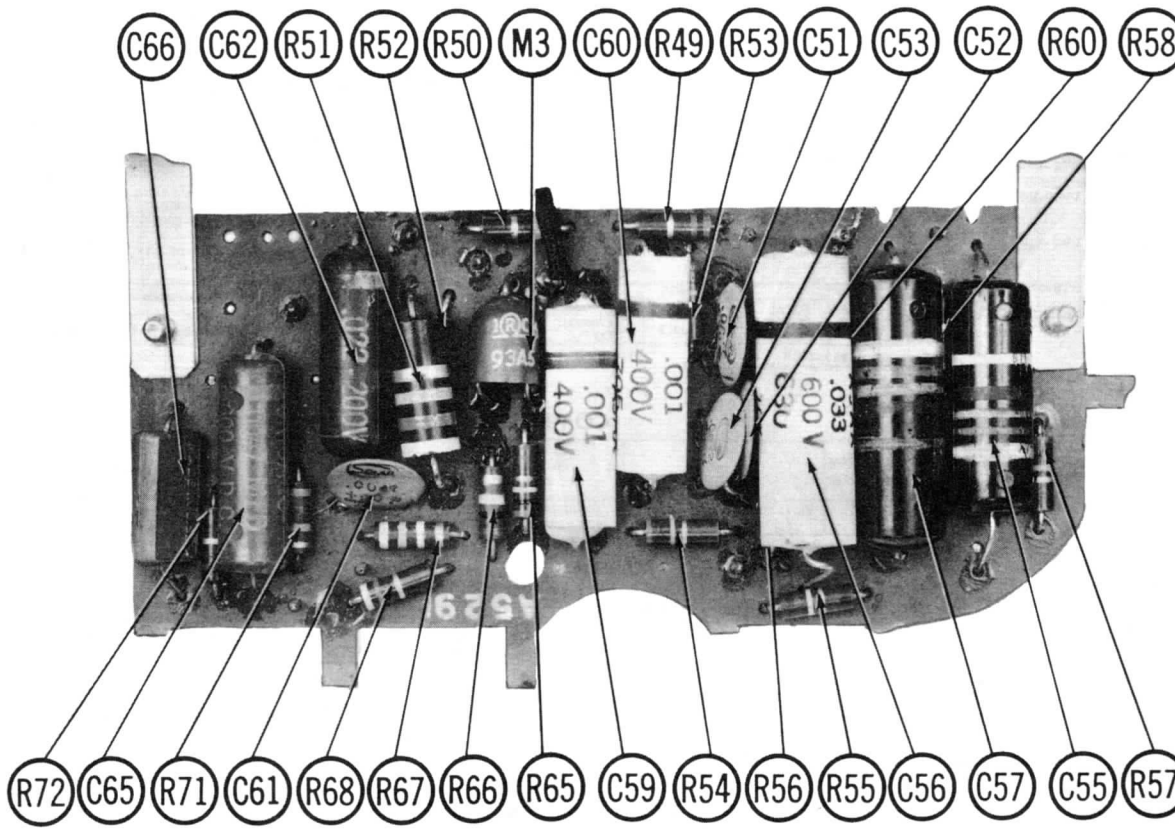

SYNC & SWEEP PRINTED BOARD

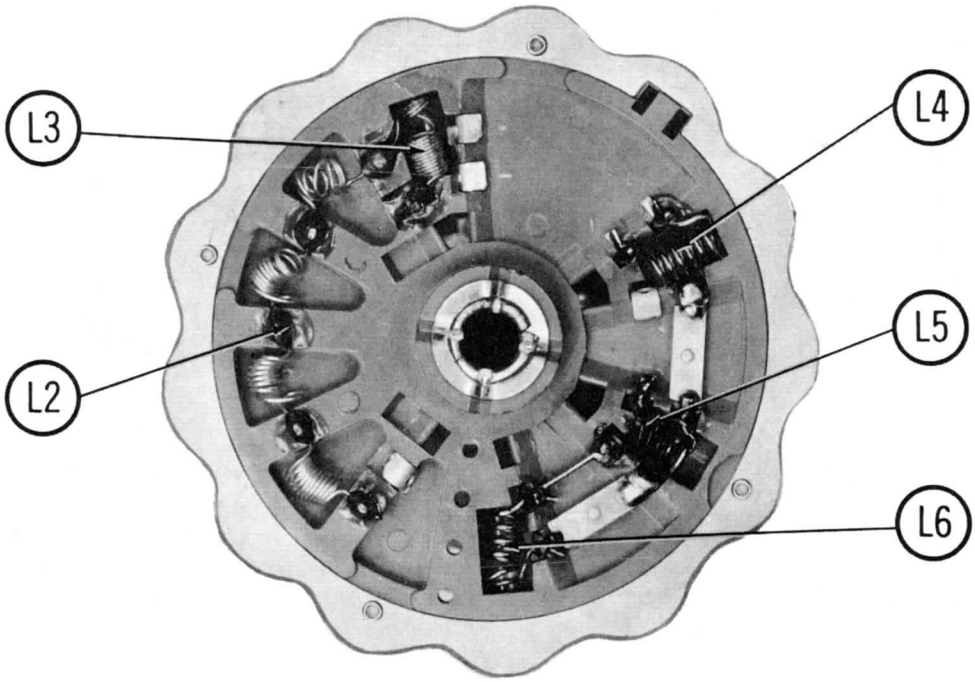

ANTENNA SELECTOR WHEEL

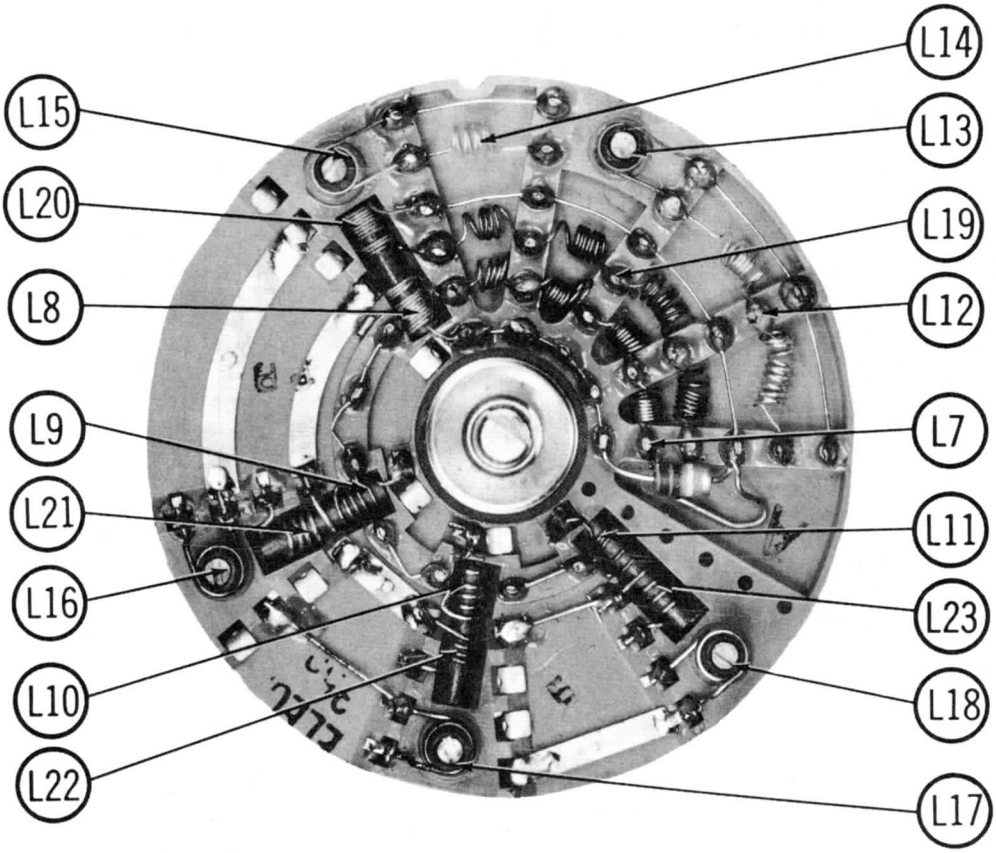

RF, MIXER & OSC. SELECTOR WHEEL

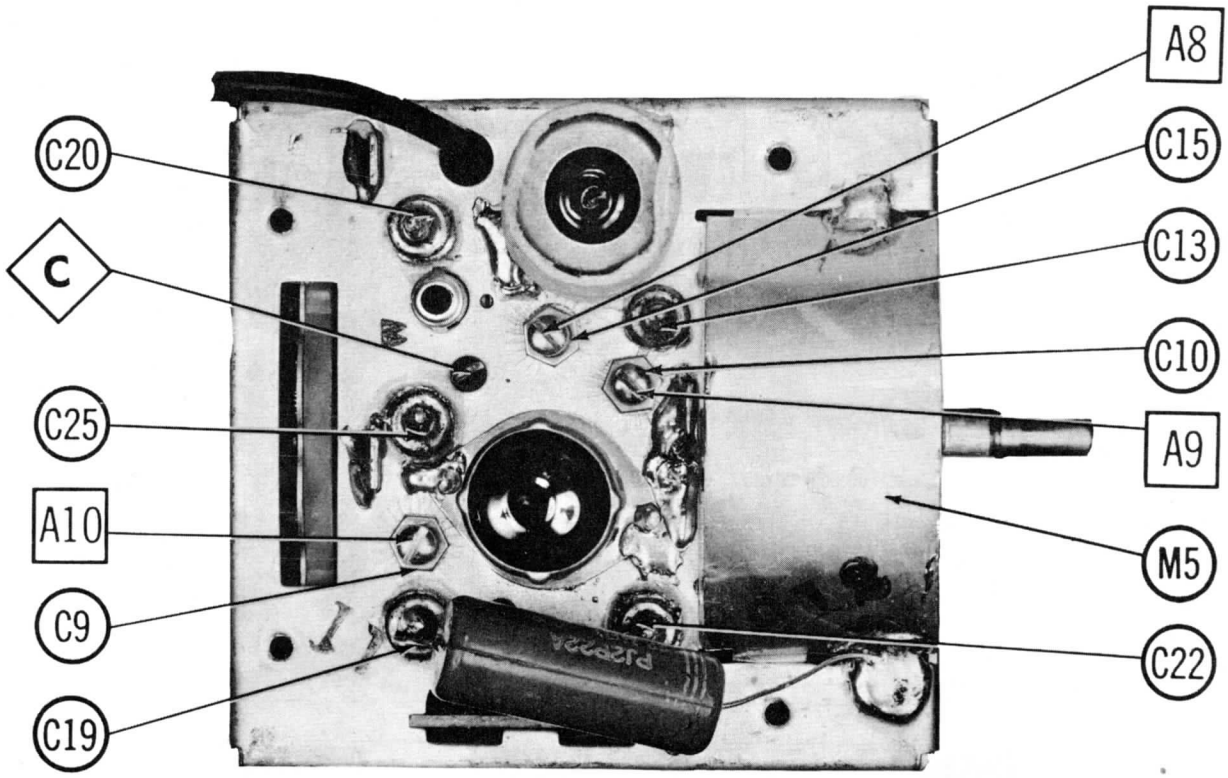

RF TUNER-TOP VIEW

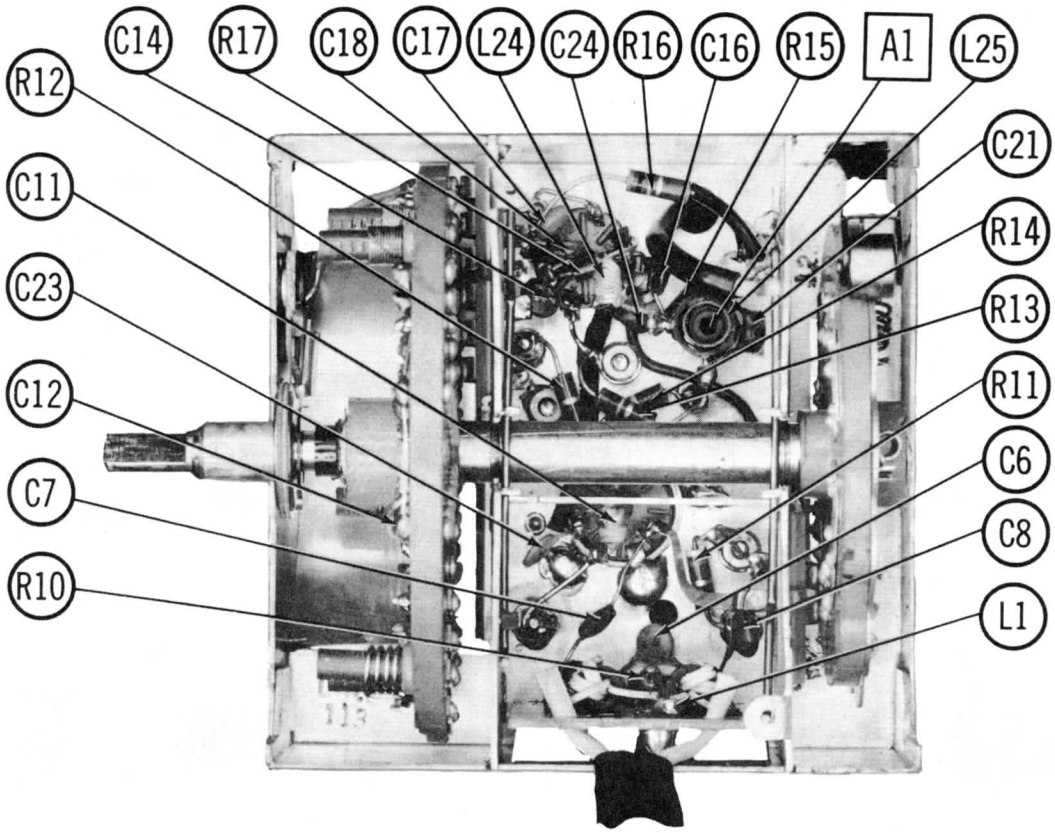

RF TUNER-BOTTOM VIEW