TECHNICAL DESCRIPTION

MARCONI-E.M.I. SYSTEM OF TELEVISION

PART 10. PICTURE MONITORS

THE PICTURE MONITOR

The Picture Monitor is an apparatus for converting the picture signals derived from the Distribution Amplifier into a picture. A cathode ray tube, known as a 12″ diameter *spherical emiscope*, is employed for the purpose and, since its characteristics determine the design of all the apparatus in the Picture Monitor unit, it will be described first.

The Cathode Ray Tube

The tube is illustrated in Fig. 1, and it will be seen that it contains a series of electrodes designated in succession *Heater, Cathode, Cathode Screen, Accelerator, Grid, First Anode, Second Anode.* An understanding of the functions of these electrodes may be approached in two ways.

In the first place the tube may be compared with a multi-electrode valve, and both as regards the disposition of its electrodes and in its electrical characteristics it resembles a hexode. There exists a relationship between the electrodes of the latter and those of the tube, which may be represented in the following table.

Cathode Ray Tube Electrode		*Valve Electrode*
Cathode	corresponds to	Cathode
Cathode screen	,, ,,	Inner control grid
Accelerator	,, ,,	Inner screen grid
Grid	,, ,,	Outer control grid
First anode	,, ,,	Outer screen grid
Second anode	,, ,,	Anode

The beam current of the cathode ray tube corresponds, of course, to the anode current of the equivalent hexode, and the relationship between the beam current and the potentials of the various tube electrodes is similar to that existing between the anode current of a hexode and the potentials of the valve electrodes. The comparison between the tube and a hexode is chiefly of importance in considering the modulation characteristic.

We may secondly examine the functioning of the electrodes from the point of view of the tube as a device for generating a picture, and in this connection it is convenient to divide them into two groups. The cathode, the cathode screen, the accelerator and the grid form collectively an electron gun, the intensity of the emergent beam from which is under control. The first and second anodes may be considered as a separate electrode system, and together constitute an electronic double convex lens, which focuses the beam emerging from the electron gun to a small spot on the fluorescent screen. As usual the focal length of the equivalent lens is dependent upon the ratio of the potentials of the first and second anodes. It will be seen, therefore, that the operating potentials of all the electrodes are determined from a combination of the requirements of the electrodes (a) operating as an equivalent hexode, and (b) operating as an electron gun together with an electronic lens system.

It is now necessary to consider the question of how the beam current shall be modulated by the vision signals. Remembering the equivalence with a hexode, it is clearly possible to modulate either the cathode screen or the grid, corresponding respectively to the inner or outer control grids of the equivalent hexode. It is found that if modulation is applied to the

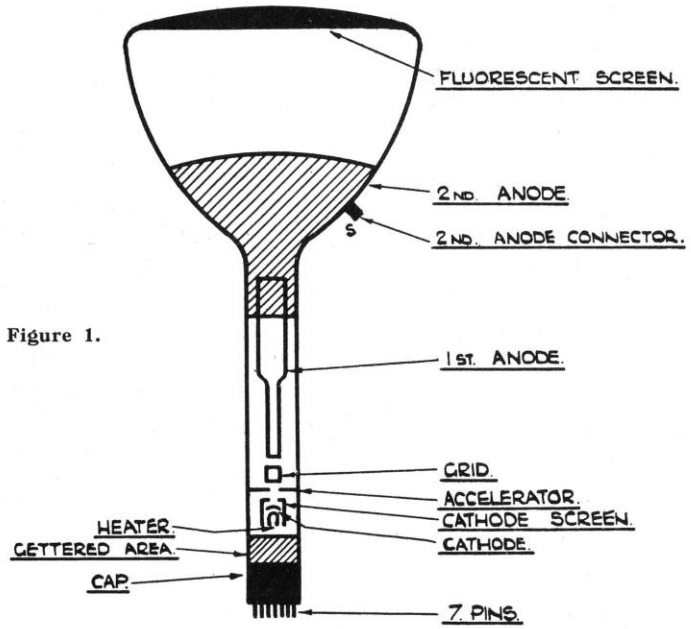

Figure 1.

grid alone, the modulation characteristic flattens off at the higher amplitudes so that the white parts of the picture are not well reproduced. On the other hand, if the modulation is applied solely to the cathode screen the modulation characteristic is too steep, that is to say, it is not linear but tends to conform to a square law curve, the effect of which is to give an over-contrasted picture. It is found, however, that if modulation is applied simultaneously to the grid and cathode screen, almost any shape of modulation characteristic can be obtained, depending upon the proportions in which modulation is relatively

The Cathode Ray Tube *(Contd)*

applied to the two grids. Individual biases are, of course, applied to these two electrodes, and it happens that the modulation characteristic is linear when the amplitudes of modulation applied to the two grids are equal. The modulation may accordingly be directly applied in equal proportions to the two grids, or it may be applied in reversed sense to the cathode alone, in which case the two grids are energised with respect to the cathode at equal amplitudes. The latter scheme, that is to say, cathode injection, is adopted in practice, and the grids are each tied to earth via condensers.

The amplitude of the vision signal which is required fully to modulate the tube is of the order of 15 V. The amplitude, however, of the emergent vision signal from the Distribution Amplifier is approximately 8 V, and therefore it is necessary to provide means for amplifying the vision signal in the Picture Monitor unit. This amplification is carried out in a panel known as the *Monitor Amplifier and Focus Unit.*

We must now consider the requirements of the various electrodes of the tube as regards their fixed operating conditions. The heater consumes 1.5 A at 4 V A.C., and this is provided by means of a transformer located in the Amplifier and Focus unit. The cathode shield and the grid require negative biases of − 15 V and − 24 V, respectively, with respect to the cathode. The accelerator, first anode and second anode are maintained at steady positive potentials of + 300 V, + 1,200 V† and + 7,000 V respectively. These two negative and three positive potentials are all obtained from potential dividers in the Amplifier and Focus unit. Connection to the various output electrodes of the tube, with the exception of the second anode, is made by means of a 7-pin socket shown in Fig. 1. The second anode, however, has a connecting stub, shown at *S* in Fig. 1, so that it is well removed and insulated from all other electrodes and cables.

The system of electrodes described above, therefore, is what is required to produce a finely-focussed spot on the fluorescent screen and modulate it with vision signals. The spot must now be made to scan the screen, and this is carried out electro-magnetically. For this purpose two pairs of coils are mounted mutually at right angles round the neck of the tube and are fed with currents of saw-toothed waveform from a further unit known as the *Separating and Scanning Unit.* These waveforms are timed from the synchronising signals, which are contained in the vision input. It is lastly necessary to ensure that the picture shall be centrally located on the fluorescent screen.

There is fundamentally no reason why this should not automatically be so, the requirements being that the tube electrodes must be accurately in line, and the beam must not be influenced by any external field. In tube manufacture, however, the requisite degree of accuracy cannot usually be obtained, and the picture is liable to be off centre. Behind the scanning coils, therefore, are provided a further pair of coils mounted upon an iron core, connected in series and fed with steady D.C. from the Amplifier and Focus unit. These coils produce a steady field which effects a permanent displacement of the scanning beam. By properly orientating the shift coil assembly, the steady deflection due to these coils may be so adjusted as to oppose the natural deviation of the beam from the central axis, and by means of a control on the Amplifier and Focus unit the intensity of the permanent deflection can be so regulated as to bring the raster to a central location on the screen.

A panel known as the *Supply Unit* provides two H.T. supplies at 300 V for the Amplifier and Focus Unit and the Separating and Scanning Unit. and a further panel known as the 7,000 *V Unit* provides E.H.T. at this voltage for the second anode and other tube electrodes.

The Picture Monitor unit therefore comprises the following individual sub-units :

(1) The Cathode Ray Tube Assembly ;
(2) The Amplifier and Focus Unit ;
(3) The Separating and Scanning Unit ;
(4) The Supply Unit ; and
(5) The 7,000 V Unit.

Of these the Cathode Ray Tube has been described, and the necessity for the other units has been shown. The four remaining units will now be described in the above order.

The Amplifier and Focus Unit

The circuit of this unit is shown in Fig. 2††. It has been explained that a gain of the order of 2 : 1 is required between the vision input and the cathode ray tube, and also that the vision input is applied to the cathode of the tube. Since, however, the application of a negative potential to the cathode will increase the tube beam current and increase the brightness of the spot, the sense of the picture input to the cathode must be negative. The sense of the picture input from the Distribution Amplifier is positive. It will be seen therefore that a single amplifying stage will both provide the necessary reversal and the very moderate degree of gain required. Accordingly the input to the Distribution Amplifier is applied to the control grid of the valve V_1, which amplifies and reverses the signals. But the signals cannot conveniently be applied to the cathode of the tube direct from the anode of V_1, as the capacity of the cathode to earth via the tube heater is such that it must be fed from a low impedance source. The cathode follower V_2 is therefore interposed between V_1 and the cathode of the cathode ray tube.

The input which is to be applied to this unit will be derived from a Distribution Amplifier and will in general be taken from a 140 ohm output, in which case it will have a black level of + 3.5 V, a white level of + 10.0 V, and a trough sync level of 0 V, all with respect to earth. The unit is, however, designed so that if desired an input derived from a 110 ohm output of the Distribution Amplifier may be employed, in which case black level will be at

244

†*Subject to fine adjustment for focussing, see p.* 5

††Figure 2 attached to p. 5

+ 10.0 V, white level at + 16.5 V, and trough sync level at + 3.5 V, all with respect to earth. The input is applied to the Amplifier and Focus Unit via terminal A. The input circuit has been so designed that if desired a further picture monitor can be fed from the same Distribution Amplifier output by plugging the monitor into a concentric socket located on the first monitor. This concentric socket is connected to the terminal C in Fig. 2. It is, of course, necessary to terminate the incoming line in its own impedance of 140 or 110 ohms. No permanent termination is provided in the Amplifier and Focus unit, but the following method is employed.

Assuming that only one monitor is to be fed from the Distribution Amplifier output, for example at 140 ohms, then a special plug containing a 140 ohm resistance is plugged into the concentric socket C, and the desired matching is effected by this impedance of 140 ohms in conjunction with the small resistances R_6 and R_7 and the input impedance of the unit, which is effectively 2,000 ohms, viz., the impedance of a potentiometer R_1. It will be seen that the impedance between the point D and earth is composed of the terminating plug resistance of 140 ohms and R_6 (5 ohms) in parallel with R_1 (2,000 ohms). The resulting impedance is 135 ohms. This impedance at the point D is increased by the resistance R_7 (5 ohms) to 140 ohms, thus presenting at the input terminal A the correct impedance to terminate the incoming cable. Where it is desired to feed a second monitor from the terminal C, then the 140 ohm terminating plug is removed, but it must be plugged into the corresponding terminal C of the second monitor. The second monitor is now arranged as has just been described above, and therefore shows an input impedance of 140 ohms, which substitutes completely for the 140 ohm termination plug formerly plugged into terminal C of the first monitor. The whole system for two monitors therefore continues to terminate the line exactly.

The Separating and Scanning Unit, to be described later, also requires an input of mixed picture and sync signals, and that is taken from the point D via the 5,000 ohm resistance R_8.

An important feature of the design of this monitor must now be considered. In all picture monitors the quality of the picture is determined by two adjustments. There is firstly a control which determines the overall brightness, or standing illumination, of the picture, and which, of course, determines the absolute brightness corresponding to black level. This control is variously designated *brightness*, *brilliance*, or *background*. This adjustment usually operates by establishing a correct standing voltage corresponding to the desired black level at the modulated electrode of the cathode ray tube. Secondly, there is the *contrast* control, which determines the relative brightness of the different areas of the picture. This operates by regulating the amplitude of the vision input to the modulated electrode of the tube. It is frequently the case that manipulation of the *Contrast* control will modify the setting of black level previously established on the *Brightness* control, with the result that considerable inter-manipulation of the controls becomes necessary before the optimum picture quality can be obtained. This is an inconvenient state of affairs and has been eliminated in these monitors.

Referring to Fig. 2, the contrast control is the potentiometer R_1, which, being the gain control of the amplifier, is consequently designated **Gain.** If the lower end of this potentiometer were returned to earth, in the standard manner, it would regulate the amplitude of the signals applied to the control grid of V_1 with reference to earth potential. That is to say, if it were set to a minimum the control grid would receive 0 V, if it were set to a maximum, the control grid would receive the full input and the black level would be 3.5 V, whilst at intermediate settings the black level would vary between 3.5 V and 0 V. This is precisely the effect which it is desired to eliminate, as variation of the gain setting at black level would result in a variation of the overall brightness of the picture. We desire that the control of black level should be entirely performed by the picture brightness control, and should be in no way influenced by the gain setting. To effect this the lower end of the potentiometer R_1 must be returned to a point at which a potential of 3.5 V, corresponding to black level, may be found. It might be connected to the positive end of a 3.5 V battery, or it might be connected to a suitable point on a potentiometer across the H.T. supply ; but in this case a suitable point at 3.5 V can be found on the cathode impedance of V_1 which will remain perfectly steady at 3.5 V, even though V_1 is a vision frequency amplifier and in the ordinary way its cathode impedance would be carrying varying potentials due to the passage of vision frequency current through it. The point in question on the cathode impedance of V_1 is the point B in Fig. 2, and the reason for the absolute steadiness of potential here will be explained later. The potentiometer R_4, designated **Amp. Preset** will clearly enable the standing voltage at B to be varied, and it is set in practice until the voltage at B is 3.5 V, the same figure as the input black level. Assuming that the correct adjustment of R_4 has been found, then when R_1 is at a minimum the control grid of V_1 will receive black level and no picture or synchronising signals, and when R_1 is not at a minimum V_1 will receive the same black level accompanied by vision and synchronising signals having amplitudes determined by the setting of R_1 and retaining their incoming picture/sync ratio.

V_1 has a finite input capacity, which in conjunction with the input resistances would cause a certain amount of loss of the upper frequencies. This loss is corrected by the condenser C_1, which shunts the upper portion of the potentiometer R_1 and by-passes the upper frequencies direct from the input on to the control grid.

The valve V_1 is a straightforward vision frequency amplifying stage having a maximum gain of 15, and the usual elements will be recognised in

245

The Amplifier and Focus Unit *(Contd)*

the intervalve coupling circuit. The inductance L_2 gives the coupling the configuration of a prototype low pass filter, the resistance R_9 being added to improve the phase characteristic at the upper frequencies. The filter is terminated at the sending end by the elements L_1 and R_{10} in series. The potentiometer R_{11}, R_{12}, R_{13} reduces the standing positive potential applied to the grid of V_2, but the condenser C_2 by-passes the vision frequency components. The elements R_{14}, R_{15} and C_3 decouple the anode circuit of V_1, and as usual the time constant $C_3\left(\frac{R_{14}R_{15}}{R_{14}+R_{15}}\right)$ is made equal to the time constant C_2 $(R_{11}+R_{12})$, so that the frequency characteristic at low frequencies, down to and including zero frequency (the D.C. component), is perfectly straight. The cathode resistance R_2 straightens the working characteristic of V_1 while R_2 and R_3 together provide the correct working grid bias of the control grid of V_1 with respect to its cathode. R_5 and, as has been seen, R_4 together determine the black level potential at B. The condenser C_4 eliminates R_3 at the upper frequencies, a provision which was found necessary in design owing to requirements in connection with the complex input circuit.

The anode output of V_1 is applied to the control grid of the cathode follower, V_2, which is of straightforward design. The usual cathode impedance R_{16} is provided to generate the required feed-back, while the anode circuit, which must contain no impedance, is shunted to earth by the condenser C_5. The screen grids of both V_1 and V_2 are fed normally. The suppressor grid of each valve must be given a small negative bias with respect to the cathode. In the case of V_1 the correct bias is secured by connecting the suppressor directly to earth. In the case of V_2, however, a similar connection would result in the application of an excessive bias, accordingly the suppressor is connected to the junction of R_{18} and R_{19} where a small positive potential exists, which in conjunction with the automatic bias of V_2 results in the suppressor grid of this valve taking up an appropriate negative potential with respect to the cathode. The sense of the vision signals is positive at the control grid of V_1, and accordingly negative at its anode. V_2 does not, of course, effect a phase reversal, and negative picture signals emerge from its cathode and are applied to the cathode of the emiscope, where they effect modulation of the beam. It will be realised, of course, that were the modulation to be applied to the grid of the emiscope, the sense of the applied signals would have to be positive, but since we are modulating the cathode the sense must be reversed, i.e. negative.

We must now consider an important feature in the design of this amplifier, which is desirable for more than one reason. It will be remembered that in all vision amplifying circuits working under D.C. conditions, as is the case in this unit, considerable importance attaches to good regulation of the H.T. supply, and to that end throughout the television system it is customary to ensure H.T. supplies of low internal impedance by means of stabilisers. If, however, it could be arranged that no vision frequency current were required to flow in the H.T. supply to a vision frequency amplifier, then the requirements for regulation could be somewhat relaxed. Expressing this another way, if the amplifier were to be internally balanced within itself so that a constant current were taken from the H.T. supply, then good regulation would be of negligible importance. This technique has been applied to the unit under consideration, with the result that it is found possible to dispense with stabilisers in the H.T. supply. It is arranged that whenever the current effectively drawn by V_1 increases due to the presence of a white picture signal, then that drawn by V_2 correspondingly decreases and the total H.T. current remains unchanged.

In the Amplifier and Focus Unit this condition of balance is secured in the following manner. In the first place the magnitude of the feed-back associated with V_2 is so chosen that the voltage excursions existing between the grid and cathode of this valve are equal in amplitude to the corresponding excursions between the grid and cathode of V_1. This does not, of course, mean that we have suppressed in V_2, by means of feed-back, all the gain we secured in V_1, for it must be remembered that a much larger current will flow in V_2 than will flow in V_1 for the same grid-cathode excursion, and this larger cathode current will develop across the cathode impedance a voltage nearly equal to that emerging from the anode of V_1. Even though we impose this condition, therefore, V_2 behaves like an ordinary cathode follower, that is to say, passes on nearly all the amplitude received from V_1. The second point is that identical valves are used for V_1 and V_2. Since both valves are pentodes, their internal impedance is very high. It follows therefore that provided there is no very wide divergence between the values of the external impedances through which the respective anode currents of the two valves flow, the magnitude of these two currents will be equal and opposite, and there will be no residual current due to this cause in the H.T. supply. It is interesting to note that the circuit must be so designed as to take account of the effect of the screened grid of V_1. The cathode currents and grid-cathode excursions of the two valves are to be made equal, but in both valves some 20 per cent of the cathode current flows in the screened grid circuit, leaving only 80 per cent for the anode. Since V_1 is a pentode, the voltage excursion at its anode will be only 80 per cent of the desired value. This excursion is, of course, the grid excursion of V_2, which will therefore be too low, and the condition of equality between the amplitude of the grid of this valve and that of the grid of V_1 will not have been attained. Compensation is therefore effected by making the external anode impedance of V_1 5/4ths of the value which would be obtained by ignoring the effect of the screened grid, the value in practice being 2,000 ohms.

We see therefore that vision frequency components of the anode currents of the two valves are balanced, being equal and opposite at all times. This condition also applies to the screen currents. Consequently the cathode currents, which include both anode and screen currents, are balanced.

Since this state of balance exists, it is possible to make part of the cathode circuits of V_1 and V_2 common, the portion in question including R_3, R_4 and R_5. By doing this, advantage is taken of the steady drop due to the steady common cathode current through R_4 and R_5 to establish the fixed black level potential of ~~3.0~~ 2.5 V, to which reference has already been made. In practice the balance, though very good at the lower and medium frequencies, becomes imperfect at the upper frequencies owing to the fact that the input capacity of the cathode of the emiscope shunts the cathode impedance R_{14} of V_2 and shunts away some of the higher frequencies which should be contributed by V_2 to the common cathode resistances R_3, R_4 and R_5. In addition there is some phase shift in the coupling between V_1 and V_2. As a result of these two causes the loss of balance will give rise to the presence of upper frequency components across R_3, R_4 and R_5, and there will be upper frequency loss and other undesirable effects. These components are therefore removed by the condenser C_6.

It will be noticed that a further vision current flows to the common cathode circuit from R_{10}, L_1, R_{11}, R_{12}, C_2, R_{13}, but this is very minute and is insufficient to upset the balance.

Under conditions of black level the anode current of V_1 is small, and its anode potential high, the absolute value being 224 V. The D.C. intervalve coupling circuit involving R_{11}, R_{12} and R_{13} imposes a quarter of this potential, or 56 V, on the grid of V_2 at black level. The cathode resistance R_{16} of V_2, apart from its function as a feed-back impedance, imposes a permanent standing bias on this valve so that under all working conditions its cathode potential will be somewhat greater than that of the grid, and at black level this potential is 60 V. For a full white vision signal this potential will be lowered to 47.5 V, and this voltage excursion is applied by direct connection to the cathode of the emiscope. The emiscope cathode screen receives a positive potential of + 45 V from the junction of R_{18} and R_{19} in the potentiometer R_{17}, R_{18}, R_{19}, R_{20}, so that at black level it is negative by − 15 V with respect to the cathode. The emiscope grid receives a positive potential of + 36 V from the junction of R_{19} and R_{20} so that at black level it is at − 24 V with respect to the cathode. A white signal, by imposing an excursion of − 12.5 V on the cathode, will set the cathode screen at − 2.5 V and the grid at − 11.5 V both with respect to the cathode.

The emiscope accelerator receives a steady potential of + 300 V, from the junction of the resistances R_{17} and R_{18}. The capacities C_7, C_8 and C_9 remove any trace of vision frequency potentials from the junctions on the potentiometer R_{17}, R_{18}, R_{19}, R_{20}.

247

The standing potentials on the cathode screen and grid may be simultaneously adjusted by variation of the potentiometer R_{20}. This therefore controls the standing brightness of the picture and the absolute illumination corresponding to black level. It is consequently designated **Background.**

A supply of current is also taken from the H.T. line via the resistances R_{36}, R_{37}, R_{38}, R_{39} and R_{40} for the shift coil already described. The resistance R_{40}, being in the form of a potentiometer, enables the shift current to be adjusted and, assuming that the shift coil has been correctly orientated, thus enables the raster to be accurately centred upon the end of the tube. The potentiometer R_{40} is accordingly designated **Shift.**

The supplies for the first and second anodes are derived initially from the 7,000 V, H.T. supply, the output from which is taken to the potentiometer R_{22} to R_{33}, which is also located in the Amplifier and Focus Unit, and shown in Fig. 2. The second anode receives a potential of almost 7,000 V, and is decoupled from the 7,000 V supply by R_{34}, C_{10} and C_{11}. In view of the high value of the voltage involved, it is desirable from practical considerations to employ in this position two condensers in series. It does not follow that the voltage will divide itself evenly between them, since the ratio of potentials across them will not depend upon their relative capacities but upon their relative insulation. It might well happen that the greater part of the applied voltage will exist across one condenser and the remainder across the other, and consequently if each condenser is rated at a working voltage of 3,500 V there will be a liability to breakdown. It is desirable specifically to locate the junction of these condensers at 3,500 V. This is done by connecting this junction via the resistance R_{35} to the junction of the resistances R_{26} and R_{27}, where there exists the required potential.

The first anode requires a potential of 1,200 V, which is found on the potentiometer R_{30}. Since the focusing of the spot depends upon the ratio of the first and second anode potentials, and since the second anode potential is fixed, a variation of first anode potential by means of R_{30} enables the focus to be finely adjusted. This potentiometer is therefore brought out to a manual control, and designated **Focus.** A tapping on the resistances R_{31}, R_{32} and R_{33} enables the first anode voltage to be varied in considerable steps should any variation in the design of emiscopes require this.

Access to the 7,000 V circuit by personnel is prevented by means of the shorting switch shown in Fig. 2, which operates when the back of the monitor is removed.

The emiscope heater is supplied from the transformer TR_1, whose primary is fed from a 13 V, secondary on a transformer in the Supply Unit, and whose secondary delivers 1.5 A at 4 V. To avoid ripple the cathode screen is connected to the centre point of the secondary.

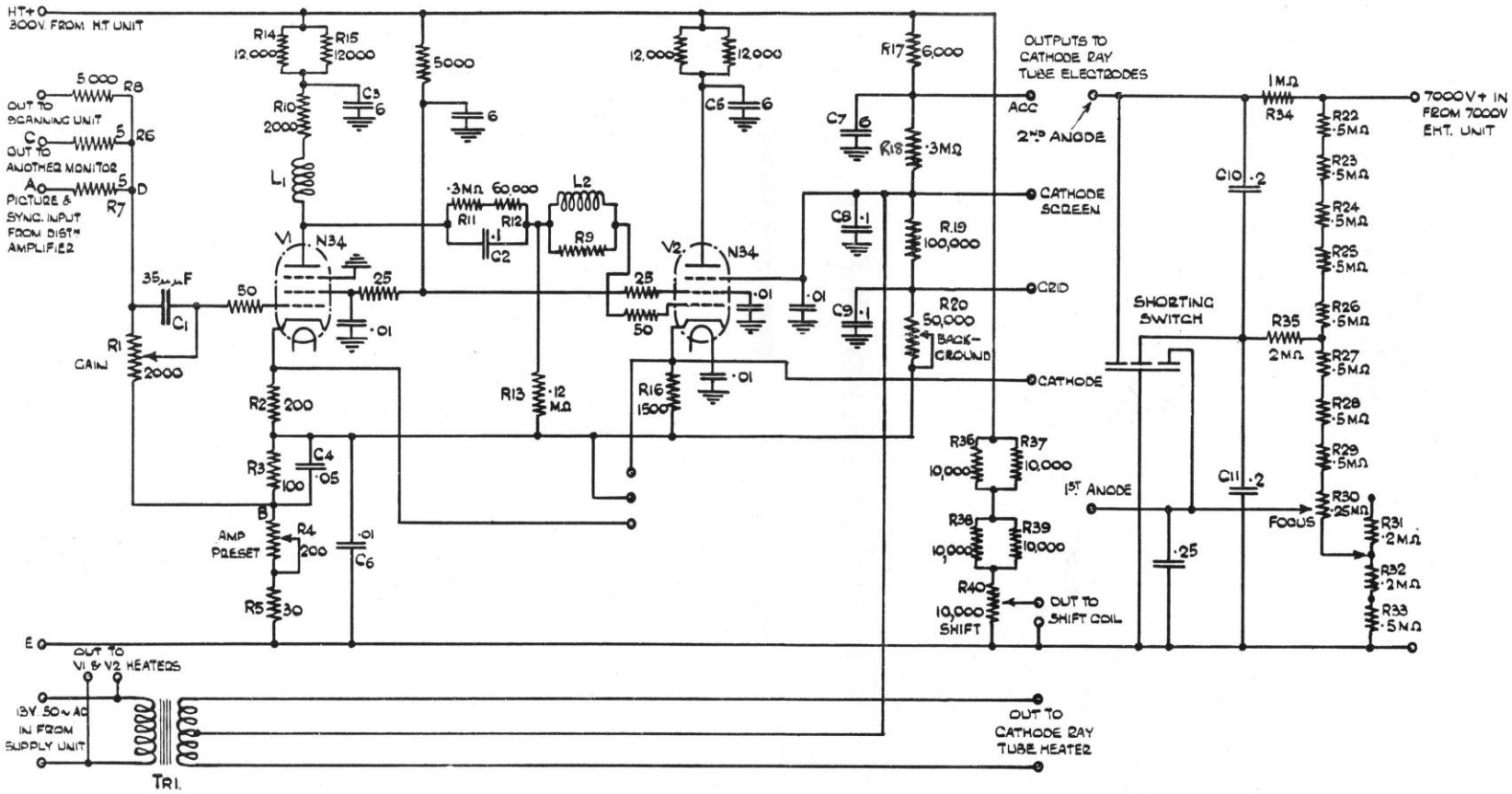

Figure 2. The Amplifier and Focus Unit

The Separating and Scanning Unit

The function of this unit, as has been already stated, is to generate the line and frame scanning currents, which are, of course, saw-toothed waveforms having frequencies respectively of 10125 and 50 c.p.s., and which must be applied to the deflecting coils situated round the neck of the emiscope. These waveforms must, of course, be kept in step with the line and frame synchronising signals. The required waveforms are illustrated in Figs. 3 and 4.

Figure 3.

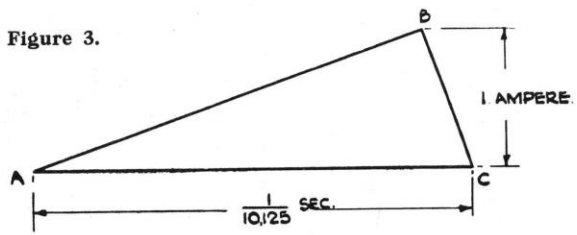

Figure 4.

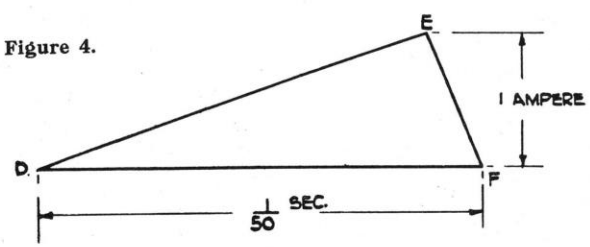

Considering firstly the line scanning waveform (Fig. 3), the current in the line scanning coils must rise linearly during the period A to B and fall as quickly as possible, but not necessarily linearly, in the period B to C, the total time occupied by the complete cycle from A to C being 1/10125 sec. During the part of the cycle AB, known as the *forward stroke*, the spot will be linearly deflected across the receiving screen from left to right, and during the period BC, known as the *fly-back* or *return stroke*, it will return to the left-hand side again ready for a new line. It is important that the period BC should be as short as possible, as this period is so much waste of time. Similar considerations apply to the frame scanning waveform illustrated in Fig. 4, with the difference, of course, that during the forward stroke DE the spot is deflected downwards, and returns during the return stroke, EF, the complete period of the cycle being 1/50th sec. In view of the fact that these monitors form the means by which the standard of quality of the transmitted picture is judged, they are considerably more complex in design than standard commercial receivers, and this complexity shows itself chiefly in the Separating and Scanning Unit.

The circuit of the unit is shown in Fig. 15†. The valves V_5, V_6, V_7, V_8 and V_9 are concerned with the generation of the line scanning waveform, and V_1, V_2, V_3 and V_4 provide the frame scanning waveform, so that the circuit really consists of two separate sections energised by a common input. Apart from the fact that the input, H.T. and L.T. power supplies are common, the two sections are entirely separate, and they will accordingly be described individually, commencing with the line scanning circuit.

The Line Scanning Circuit

The line saw-tooth is generated primarily as a voltage by the relaxation oscillator, comprising the resistance R_1 and the condenser C_1, in co-operation with the valve V_6. In order to simplify the description, the right-hand side of the condenser C_1 should, for the time being, be considered as connected to earth. The fundamental action is that, assuming that the potential of both sides of the condenser C_1 is initially zero, and H.T. is applied to the top of the resistance R_1, the condenser C_1 will slowly charge, the rate of charge being governed by the time constant $C_1 R_1$, and accordingly the potential of the left-hand side of C_1 will rise. While this is happening, the valve V_6 is entirely non-conductive, but at a certain point it becomes highly conductive and therefore constitutes almost a short circuit to earth from the left-hand side of the condenser C_1, which is accordingly discharged. The valve V_6 is now made non-conductive, and the cycle of operations repeats itself. The portion AB of Fig. 3 corresponds to the charging period of C_1 when V_6 is non-conductive, and the period BC to the discharging period of C_1 when V_6 is conductive.

We must now consider the means by which V_6 becomes alternately conductive and non-conductive and it will be desirable to commence a study of this cycle of operations from that point of the cycle corresponding to the point A of Fig. 3, i.e. the beginning of the forward stroke. At this moment the potential on the left-hand side of C_1, which is connected to the anode of V_6, is zero, and at the same time, due to a reason which will appear later, the grid of V_6 is at a strong negative potential sufficient to carry the valve well beyond its cut-off point. Starting from the point A, the H.T. voltage slowly proceeds to charge C_1 via the high resistance R_1, so that the anode voltage of V_6 rises steadily. At the same time, as an entirely separate effect, the large negative potential on the grid of V_6 leaks away via the grid resistances R_4, R_5 and R_6 at a rate determined for practical purposes by the time constant C_2 $(R_4 + R_5 + R_6)$. At one and the same time, therefore, 248

†Figure 15 attached to p. 19

we have the anode potential of V_6 rising in the positive direction and the grid potential approaching zero from a large initial negative potential, and though the valve was initially non-conductive due to this negative potential, a state of affairs is clearly being approached in which the valve will have sufficient anode potential together with a small enough grid bias to become conductive. Apart, however, from conductivity between anode and cathode, it will be observed that the screen and suppressor grids of V_6 are both connected to a positive voltage derived from the potentiometer R_7, R_8, R_6, so that when the negative bias on the control grid becomes sufficiently reduced there will be conductivity between the screen grid and cathode, and current will flow. This occurs at the point B of Fig. 3, at which point the screen grid begins to draw a small current, which passes through the primary winding of the transformer TR_1, and induces a voltage in the secondary. This latter winding is connected to the control grid in such a sense that the voltage across it will tend to drive the grid more positive. This increases the current drawn by the screen grid, which in turn increases the positive voltage applied to the control grid. The effect is therefore cumulative, and when the screen begins to conduct the screen current will immediately be driven to a very high peak value. At the same time the anode-cathode path becomes highly conductive, and the condenser C_1 is discharged. A finite time is, of course, necessary for the discharging operation, and this is the period BC of Fig. 3. The cathode of V_6 is connected directly to earth, and the control grid can therefore readily draw grid current. The amplitude of the positive pulse delivered to the control grid from the secondary of the transformer TR_1 is sufficiently great as to attempt to drive the grid strongly positive, but restoration of D.C. occurs and the control grid does not succeed in becoming more positive than zero potential. Therefore at the moment during the return stroke when the maximum screen current is being drawn, and the maximum positive potential is being applied to the control grid, there co-exists on the control grid, due to D.C. restoration, a negative charge equal in value to the amplitude of the induced positive pulse. When the positive pulse has driven the grid as far positive as the restoration of D.C. will permit, the screen current can increase no further, and it is for the moment stationary. There is now no flux in the transformer, and the positive pulse is withdrawn, leaving a negative charge due to D.C. restoration on the grid, which accordingly cuts off screen and anode current. The screen current in falling will induce a flux in the opposite direction to the transformer TR_1, which will momentarily drive the grid more negative than the potential due only to D.C. restoration. But when the screen current finally ceases the flux in the transformer TR_1 will again be zero. The negative pulse will therefore cease, and the negative potential of the grid becomes that due to D.C. restoration alone. This last effect, involving a negative pulse on the control grid, however, has no bearing on the action of the circuit since the valve is already cut off by the potential due to D.C. restoration, and is a purely subsidiary effect which must result from the action of the transformer TR_1. The cycle of operations has now arrived at the point C in Fig. 3, which corresponds to the end of the first saw-toothed cycle and the beginning of the next one, and the cycle repeats itself indefinitely. It will be seen that though it is the action of the screen and control grids which result in the alternate non-conductivity and conductivity of the valve, conductivity of the screen-cathode path is, of course, accompanied by conductivity of the anode-cathode path, and it is this latter path that is utilised to discharge C_1, across which there now must appear a waveform of the type illustrated in Fig. 3.

The potential applied to R_1 and C_1 for the purpose of generating the saw-toothed waveform is supplied from the H.T. line via the potentiometer R_3 R_9 and the decoupling circuit R_2 C_3. The specific voltage corresponding to the point B in Fig. 3, that is to say, the maximum amplitude of the saw-toothed waveform, will depend upon the potential applied to R_1. This potential may be controlled within limits by adjustment of the potentiometer R_3, which therefore acts as a control of the amplitude of the line scanning, and thus of the width of the received picture. The potentiometer R_3 is accordingly designated **Width.**

The frequency of the generated waveform will clearly depend upon the value of the time constant C_2 $(R_4 + R_5 + R_6)$, for if any of these resistances is reduced the negative potential which holds V_6 non-conductive will leak away from the control grid more rapidly and the frequency will increase, and *vice versa*. Further, the application of a positive potential to the lower end of R_4 R_5 will also increase the frequency by accelerating the leakage of the negative potential from the grid. Variation of such a positive potential forms a convenient means of frequency control, and this latter method is used for the normal fine frequency adjustment under operating conditions. To effect this, R_6 is made part of the potentiometer R_6 R_7 R_8, which is connected across the H.T. supply and so carries a positive potential. It is accordingly brought out to a manual control designated **Line Frequency.** For normal operation R_5 is held shorted by the switch S_1, but it is convenient for test purposes to be able to run the line scanning at half frequency, and the insertion of R_5 by opening S_1 effects this.

It is now necessary to synchronise the line frequency generated by V_6 with the line synchronising signals incoming from the transmission. This may be done by arranging to apply the line synchronising signals in the positive sense to the control grid of V_6. Assuming that at the instant of application of a line synchronising signal the control grid is still sufficiently negative to render V_6 non-conductive, the application of a synchronising signal will overcome the remaining negative charge on the grid and render the valve conductive. The leading edge of the synchronising signal will therefore precisely coincide in time with the point B of Fig. 3, that is to say, the synchronising signal will initiate the return stroke and not, of course, the

The Line Scanning Circuit (*Contd*)

forward stroke. The monitor has to be supplied from a Distribution Amplifier, and at the monitor output of such an amplifier the vision waveform has the characteristics given in Fig. 5. The troughs of the synchronising signals correspond to 0 V, black level to + 3.5 V, and white level to + 10.0 V, all with respect to earth. The synchronising signal incoming is therefore in the negative sense, but V_6 requires it in the positive sense. The signal must therefore be reversed by a valve, and this is the function of V_5. At the same time it is, of course, necessary to separate the signal from the incoming picture and synchronising waveform, as the synchronising signal only is required by V_6. This separation is also performed by V_5.

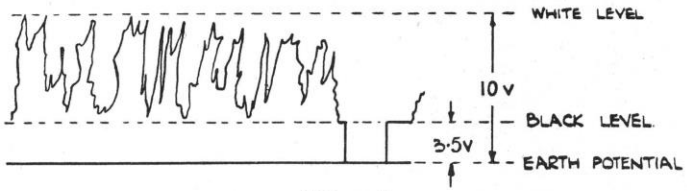

Figure 5.

It will be seen that the cathode of V_5 is returned to the potentiometer R_{14}, which is a portion of a potentiometer system R_{10}, R_{11}, R_{12}, R_{13}, R_{14}, R_{15} connected across the H.T. line. These resistances are so proportioned that on R_{14} may be found a potential of + 3.5 V. This potentiometer is brought out to a manual control designated **Sep. Bias.** At black level, therefore, the potential of the control grid of V_5 with respect to its cathode is zero; the synchronising signals will drive the grid 3.5 V negative, but the vision signals will attempt to make it positive. At black level, however, when the control grid is at zero potential with respect to its cathode, the potential of the anode, due to the high anode resistance R_{16}, is already so low (about + 5 V) that it would scarcely be influenced by any movement of the grid potential in the positive direction. Expressing this another way, the resistance R_{16} and the anode-cathode path of the valve V_5 are together constituting a potentiometer, in which at black level the impedance of the anode-cathode path is very small compared with R_{16}, so that the standing D.C. potential at the junction of R_{16} and V_5 has already been reduced to 5/300ths, i.e. 1/60th, of that of the H.T. line. Accordingly if the picture signals render the control grid slightly positive, the impedance of the anode-cathode path will be reduced, but as it was previously very low compared with R_{16}, the percentage change, as it were, in the setting of the potentiometer consisting of R_{16} and V_5 will be so small that there will be a negligible change in the absolute anode potential, so that picture signals will have little effect on the grid of V_6. Very considerable suppression of the picture signals is effected in this manner. In addition, however, the resistance R_{17} is inserted having a value, 10,000 ohms, much higher than is normal were it placed there purely for anti-parasitic purposes. If the potential of the control grid with respect to the cathode attempts to become more positive than zero upon the application of picture signals, the impedance of the grid cathode path will be very much less than R_{17}; the greater part of the voltage due to the picture signals will be dropped across R_{17} and only a small proportion will appear between the grid and cathode. On the other hand, when the synchronising signals drive the grid negative with respect to the cathode no grid current will be drawn, and the impedance of the grid-cathode path will be very high with respect to R_{17}, the effect of which will now be negligible, as nearly all the input voltage due to the synchronising signals will appear between the grid and cathode and energise the valve. The presence of R_{17} therefore constitutes a second method of suppressing the picture signals. The two methods of suppression operate together, and whereas neither acting alone would provide the requisite degree of suppression, the two together ensure that the waveform appearing at the anode of V_5 consists almost entirely of pure synchronising signals. Due to the reversing action of V_5, the sense of the signals on the anode is positive, and they are therefore applied directly to the grid of V_6 via the blocking condenser C_4.

The screen grid potential of V_5 is fixed at the unusually low value of 28 V, derived from the junction of R_{12} and R_{13} in the potentiometer R_{10}, R_{11}, R_{12}, R_{13}, R_{14}, R_{15}. This gives the valve V_5 a very short grid base, so short in fact that a synchronising signal of some 3.5 V input will drive the control grid to the bottom bend of its characteristic, and the anode current will be cut off. Employing once more our former analogy in which we compared the resistance R_{16} and the anode-cathode path of V_5 to a potentiometer, we can say that in the presence of a synchronising signal, since the impedance of the anode-cathode path becomes nearly infinite, the impedance of the upper limb of the potentiometer, R_{16}, is very small compared with that of the lower limb, the anode-cathode path of V_5, and consequently the anode potential will be approximately that of the H.T. line. Such a signal therefore causes the anode potential to rise from + 5 V to + 300 V. Therefore a very strong synchronising signal, having an amplitude of some 295 V, is delivered to the grid of V_6, and clearly the control exerted by it on the blocking oscillator V_6 will be very firm.

It will be noticed that the complete synchronising waveform is applied to the grid of V_6, that is to say, although the circuit associated with V_6 is concerned solely with the generation of the line scanning waveform, both line and frame synchronising signals are applied to its grid. This is done for a reason which has been explained in my note on the Signal Waveform (Item 1.1). It is desired that the line scanning waveform should be smoothly maintained throughout the frame synchronising period, and therefore the line scanning generator V_6 must be synchronised at line frequency during

this period. In my note on the Signal Waveform it is explained that the frame synchronising waveform is so designed as to contain line synchronising components, and it is therefore suitable to maintain generation of line scanning waveform during the frame synchronising period. For this reason therefore both the line and frame synchronising signals are applied to the grid of V_6, and no attempt is made to separate them.

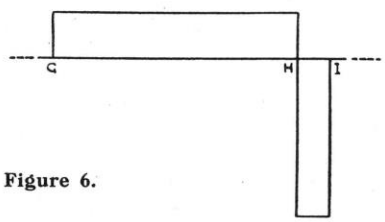

Figure 6.

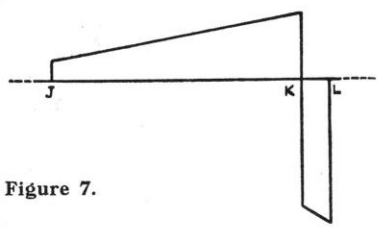

Figure 7.

The part of the circuit so far described has provided us across C_1 with a line frequency saw-toothed voltage held rigidly in synchronism with the incoming synchronising signals. Our ultimate requirement, however, is to produce a line frequency saw-toothed current in the line deflection coils of the cathode ray tube.

The conversion from voltage to current is effected by the valve V_7. The current excursion required in the tube deflection coils is 1 ampere. Such a current cannot be directly supplied by V_7, and we therefore insert the transformer TR_2, which has a ratio of 7 : 1, so that the maximum current change required in the primary will be 1/7th ampere, or 140 milliamperes. The inductance of the tube deflection coils is 2 mH, and this inductance is across the secondary of the transformer TR_2. It will accordingly appear across the primary to have been multiplied by the square of the transformer ratio, which is 49 : 1, and will have a value of .106 H. We have to devise means by which a saw-toothed current at line frequency may be produced in this inductance.

This cannot be done by applying a saw-toothed voltage across the inductance for the reason that the voltage E across an inductance L is given by the expression $E = \frac{L\mathrm{d}i}{\mathrm{d}t}$. That is to say, the voltage across an inductance is given by the first differential with respect to time of the current through the inductance. Therefore to produce in an inductance a current having the waveform of Fig. 3, we should have to apply across the inductance a voltage having the waveform illustrated in Fig. 6, which is the first differential of the waveform of Fig. 3. The points *GHI* in Fig. 6 occur at the same times as the points *ABC* in Fig. 3 respectively. Expressing this physically, upon the application of a voltage across an inductance, the current does not rise to its full value immediately, but takes time to do so. In order to produce the desired current (*AB* in Fig. 3) in the inductance it will be necessary to hold across it a steady voltage, *GH* of Fig. 6, whilst to effect the fly-back (*BC* in Fig. 3) the voltage will have to be reduced to a negative standing value, as shown in Fig. 6, over the time *HI*. If we have to produce a saw-toothed current in a circuit containing both inductance and resistance in series, which is the practical case, the necessary voltage waveform will be a combination of Figs. 3 and 6, and will be on the lines of that indicated in Fig. 7. If on the other hand we wished to drive a saw-toothed current through a pure resistance, we should, of course, apply an identical saw-toothed voltage waveform, as in Fig. 3.

In the practical case there are two courses open to us, either we may apply to the deflection coils, which consist of inductance and resistance in series, the waveform of Fig. 7, which must consist of a properly proportioned mixture of the saw-toothed waveform of Fig. 3 and its first differential shown in Fig. 6, or we must add in series with the deflection coil a comparatively high resistance so as to swamp the effect of the coil inductance, in which case we may apply a saw-toothed waveform. In the present case we employ the second of these alternatives, simply by making the output valve V_7, a pentode. The high internal impedance of the valve then overcomes the distortion of the current waveform which would otherwise be produced by the presence of the effective inductance of .106 H in its anode circuit.

In theory, the circuit as so far described contains the essential features necessary to provide a saw-toothed current at line frequency in the line deflection coils of the tube and having a peak value of 1 ampere. Unfortunately, however, a complication is introduced owing to the presence of self-capacity in the line deflection coils and transformer windings, the total value of which, when referred to the primary of the transformer TR_2, is .0001 μF. To understand its action, let us imagine we have arrived at the point of the scanning cycle corresponding to *B* in Fig. 3, where the scanning current is at its maximum value of 1 ampere and the return stroke is about to commence. The grid potential of V_7 having attained its maximum positive value falls suddenly, and V_7 attempts to cut off the current flowing through

The Line Scanning Circuit *(Contd)*

the primary of TR_2. The effective inductance in the anode circuit of V_7, however, does not permit a sudden reduction of the current to zero, but endeavours to maintain the current flowing, and it flows into the self-capacity. In effect, the tuned circuit comprising the effective anode inductance and self-capacity is excited, by the sharp transient formed by the return stroke, into oscillation at its natural frequency, which is of the order of 50,000 c/s. Instead, therefore, of the spot making a smooth return to the left-hand side of the picture, it will return in an oscillatory manner and take as much as 100 micro-seconds, or the time of one line to do so. Obviously, the spot must be made to return much more quickly, and certainly within the period of 15 micro-seconds during which black level is maintained by the line suppression pulse. In commercial receivers the difficulty is overcome by placing across the circuit a resistance of value such as to give critical damping. This is quite in order where the requirements of the tube and the design of the scanning circuit as a whole are more moderate than in the present case, and where therefore the effective inductance in the anode circuit of the output valve has a smaller value. The more advanced type of cathode ray tube employed in the Picture Monitor, however, demands a greater amplitude of scanning current, which in practice entails scanning coils and an output transformer whose constants give the comparatively high value of effective inductance of .106 H already quoted. With critical damping, the return stroke is effectively completed, that is to say, the spot will have traversed 99 per cent. of its path, after a period equal to 1.3 times the periodic time of the resonant oscillation. In this case, the return time would therefore be $\frac{1.3}{50{,}000} \times 10^6\,\mu\text{ sec} = 26\,\mu\text{ sec}$, which is too long, being nearly twice as great as the duration of the line suppression period. To decrease this it would be necessary to design the circuit so that less effective inductance was presented to the anode of V_7, but we would not then be able to get an adequate scanning amplitude.

The difficulty is, of course, that any damping applied to the transformer TR_2 is present all the time. What we really desire is for the transformer to be undamped during the forward stroke, but to be damped during the return stroke so that the oscillation at 50,000 c/s may be suppressed. In practice the problem is dealt with in this manner by the inclusion of the valve V_8 and its associated circuit. The circuit is an example of a case where the adoption of a certain technique with a particular end in view, which in this case is the suppression of the resonance at 50,000 c/s, brings in its train one or more further advantage. In this case the inclusion of V_8 also has the effect of increasing the output which it is possible to obtain from V_7. Were it not for this feature, this valve would have to be of a larger type than is actually used.

In order to study the action of the complete circuit, including V_8, it will be convenient to commence with a consideration of the saw-tooth cycle from the beginning of the forward stroke, that is to say, from the point A in Fig. 3. At this moment the grid voltage of V_7 commences to rise in the positive sense, and a steadily increasing anode current is forced through the effective inductance L of .106 H. The voltage E across the inductance L is given by the equation $E = \frac{L\mathrm{d}i}{\mathrm{d}t}$. Since this equation indicates, as we have seen, that the voltage across the inductance is proportional to the first differential of the current, and since the current has the saw-toothed configuration of Fig. 3, the voltage across the inductance will have a constant value during the whole of the forward stroke AB. By substitution in the above equation we can compute this voltage.

Thus, we have $L = .106$ H

$\mathrm{d}i$, taken over the duration of the forward stroke (AB of Fig. 3) is, as already stated, 140 mA.

$\mathrm{d}t$, the duration of the forward stroke (AB of Fig. 3) is 90 μ secs, i.e. the difference between the complete time of a line, 100 μ secs, and the fly-back period, which will be shown later to be 10 μ secs.

$$\text{Therefore, } E = \frac{L\mathrm{d}i}{\mathrm{d}t} = .106 \times \frac{140}{1{,}000} \times \frac{10^6}{90} = 165\text{ V}$$

The anode voltage of V_7 will remain steady at a voltage equal to the H.T. voltage less E, or 135 V. An anode current, which will be shown later to be + 100 mA, will be built up by the time the end of the forward stroke is reached. At B of Fig. 3, the grid potential of V_7 drops suddenly to zero and endeavours to cut off the anode current. As we have seen, however, the inductance maintains a current flow into the self capacity, and an oscillation of 50,000 c/s commences, one cycle of which is illustrated in Fig. 8. During the first quarter cycle (MN of Fig. 8) the current maintained by the inductance flows into the self-capacity and produces a back voltage across it, which rises to the very high figure of some 3,000 V. At the point N in Fig. 8, which in time occurs, of course, shortly after the point B of Fig. 3, the absolute anode potential of V_7 is approximately 3,000 V and, owing to opposition from the back voltage across the self-capacity, the current in the inductance has fallen to zero. We are now about to begin the second quarter (NO in Fig.8) of the 50,000 c/s oscillation. The self capacity begins to discharge through the inductance L, producing a current in the reverse direction which, neglecting losses for the moment, rises at the end of the second quarter of the cycle, that is to say at the point O of Fig. 8, to − 100 milliamperes. The self capacity will now be completely discharged, and therefore the high anode voltage of 3,000 V will have disappeared from the anode of V_7, which will be at the potential of the H.T. line, i.e. 300 V. We are now about to

commence the third quarter (*OP* of Fig. 8) of the 50,000 c/s oscillation, during which it will be clear, that unless we take preventive measures the anode voltage of V_7 will become negative and, neglecting losses, will attain a potential of $-$ 3,000 V at the point *P* of Fig. 8. It is, however, prevented from doing so by the action of the diode V_8, which has so far been inoperative.

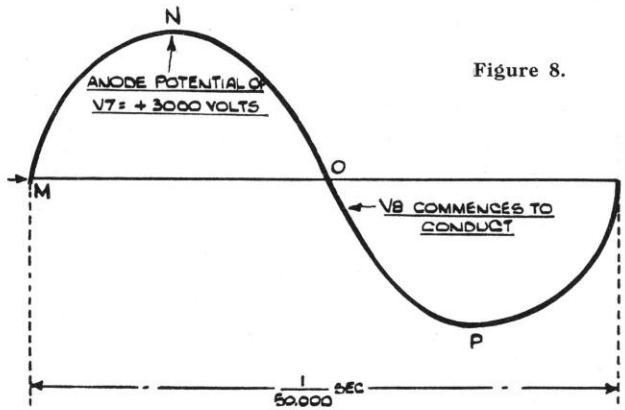

Figure 8.

In order to understand the action of V_8 we must return once more to the beginning of the forward stroke (the point *A* in Fig. 3). It will be seen that the diode is connected across the primary of the transformer TR_2, that is to say, across the effective inductance *L* of .106 H. In series with its anode are the elements R_{18}, R_{19} and C_5. During the forward stroke there is, as has already been stated, a steady voltage drop of 165 V across the primary of the transformer TR_1, so that during this time the absolute potential of the anode of V_7 will remain steady at + 135 V. For a reason which will appear later, there is a similar drop of 165 V across the elements R_{18}, R_{19} and C_5, so that during the forward stroke the absolute anode potential of V_8 is also steady at + 135 V. But the cathode of V_8, being connected to the anode of V_7, is also at + 135 V. There is therefore no difference of potential between the anode and cathode of V_8, so that during the forward stroke it does not conduct. Actually this statement is not strictly true, but for the moment we will assume that V_8 does not conduct during the forward stroke. It will also be of assistance to imagine for the moment that the elements R_{18}, R_{19} and C_5 are simulating a battery of 165 V with its positive end connected to the H.T. line and its negative terminal to the anode of V_8. In point of fact such a battery could perfectly well be substituted for these elements.

Transferring our attention to Fig. 8, during the period *MN* the anode voltage of V_7 rises to + 3,000 V, and during the whole of this period therefore the cathode of V_8 is more positive than its anode. Similarly, during the period *NO* of Fig. 8, when the anode voltage of V_7 falls from + 3,000 to + 300, V_8 still does not conduct. After a short portion, however, of the period *OP* of Fig. 8, the anode voltage of V_7 will have fallen to + 135 V, at which point the anode and cathode potentials of V_8 are equal, and subsequently attempts to move off to $-$ 3,000 V. But the moment it falls below + 135 V the diode V_8 becomes conductive. The impedance of the diode is 100 ohms, so that the circuit of V_8 effectively short-circuits the primary, the short circuit, however, being in series with the voltage of 165 at present across C_5. The oscillation is therefore completely damped out by the sudden imposition of the short circuit, and its continuance beyond the point *O* of Fig. 8 is impossible. At the point *O*, the current in the effective inductance *L* has reached its maximum negative value, that is to say, the spot is fully deflected to the left from the point of view of an observer facing the picture, and in fact the return stroke is complete. In practice, due to losses, the reverse current only rises to $-$ 40 mA, so that the complete current change is from $-$ 40 mA to + 100 mA, i.e. the desired change of 140 mA. It is evident therefore that the return stroke has been accomplished during the time occupied by the half cycle *MNO* of Fig. 8. The duration of this, namely, $\frac{1}{2} \times 1/50{,}000$, or 10 micro-seconds, is a very satisfactory fly-back time, since it is only 10 per cent of the time of a line, and is thus well covered by the standard line suppression pulse, which has a duration of 15 per cent of the time of a line. In view of the fact that the circuit is allowed to make one undamped half-cycle of oscillation, that is to say, the circuit resonates for half a cycle, the circuit is said to be of the *resonant return* type.

It has already been observed that the inclusion of the resonant return circuit confers the advantage of increasing the deflection output which it is possible to obtain from V_7 for a given excursion of anode current, and we are now in a position to see why this is so. Without the resonant return circuit the anode current of V_7 would have to vary between zero, corresponding to the commencement of the forward stroke, and + 140 mA at the end of the forward stroke. With the inclusion of the resonant return circuit, however, the necessary scanning excursion of 140 mA is obtained with a maximum anode current of only 100 mA, since the resonant anode circuit derives from this a scanning excursion of approx. 1.5 times this value. The beam deflection, or width of picture available from a given size of valve at V_7, is therefore increased by 1.5 times by the use of the resonant return circuit, and the width of scanning necessary for the 12″ cathode ray tube can therefore be obtained without recourse to a power amplifier, V_7, of fundamentally greater capacity.

253

The Line Scanning Circuit (*Contd*)

We must now consider the action of the elements R_{18}, R_{19} and C_5, and ascertain why there is a steady voltage drop of 165 V across them during the forward stroke. This feature is somewhat bound up with the operating conditions of the valve V_7. It is clearly a necessary feature of the working of the circuit that during the forward stroke there should be a steady drop of 165 V across R_{18}, R_{19} and C_5, and this can only be possible if an appropriate current is flowing through R_{18} and R_{19}. This current is provided by arranging that V_8 shall conduct slightly during the forward stroke. For this to happen the circuit must endeavour to reduce the potential of the cathode of V_8, and consequently of the anode of V_7, slightly below + 135 V during the forward stroke. This will occur if it is arranged that the rising anode current of V_7, due to the application of the forward stroke saw-tooth from V_6, is always slightly greater than the current required by the primary of TR_1. This will obviously be the case if the amplitude of the saw-tooth applied to the grid of V_7 is made slightly greater than the theoretically exact figure. This is done, and the result is that the excess of the anode current of V_7, over and above that required to produce 165 V across the primary of TR_1, flows through the diode V_8. This excess current will vary somewhat during the forward stroke, and accordingly the values of R_{18} and R_{19} are chosen so that the mean current through the diode during the forward stroke will produce a voltage of 165 across these resistances. The function of C_5 is purely as a smoothing condenser to eliminate from the steady voltage across R_{18} and R_{19} the variations which normally obtain due to the fact that the current in V_8 is not constant during the forward stroke. The voltage will be substantially constant if the time constant $C_5(R_{18} + R_{19})$ is made much longer than the time of a line, and it will be seen that the figure employed in practice is 2,000 μ sec., or the duration of 20 lines.

If the resonant return circuit were not used, the current in the primary of TR_1 would be zero at the beginning of the forward stroke, and the commencement of the latter would coincide with the commencement of the application of the saw-tooth from V_6. With the present circuit, however, the current in the primary of TR_1 is − 40 mA at the beginning of the forward stroke, and it is not only unnecessary, but is also undesirable, to apply the saw-tooth from V_6 at this moment, since until the − 40 mA has fallen substantially to zero it is unnecessary for V_7 to deliver any current. In these circumstances the application of the saw-tooth from V_6 would make V_7 deliver unnecessary current, all of which would pass through the diode V_8 in the manner just described. Such a current would produce a voltage drop sufficient to disturb the standing potentials of + 135 V and mar the linearity of scan. Accordingly the circuit is arranged so that V_7 is not, as it were, turned on until the − 40 mA has dropped nearly to zero. This is done by the simple expedient of arranging that the amplitude of the saw-tooth delivered from V_6 is greater than the grid base of V_7 by the appropriate amount, which is about 1.5 times, so that during the first part of the saw-tooth the operating characteristic of V_7 is beyond the cut-off point and the valve delivers no current. It will be observed that the condenser C_1 is returned not, as would be expected, to earth, but to the cathode of V_7. This is because no feed-back is required on this valve, and since the cathode resistance R_{20} of V_7 is required for grid bias purposes, the grid of this valve must be returned to its cathode with respect to A.C. in order to avoid feed back.

It is found that certain unavoidable losses in the coils of the transformer TR_1 tend to make themselves apparent towards the end of the line in the shape of a slowing up of the scanning. To overcome this it is desirable that the current in V_7 should rise a little more rapidly than is required in theory. However, the natural curvature of the characteristic of V_7 compensates for this very closely.

It is found that with the circuit as so far described a number of black and white vertical bars will be observed on the left-hand side of the reproduced picture, decreasing in intensity from left to right. This is due to the fact that the leakage inductance of the transformer TR_2 is in series with the self-capacity of the line scanning coils forming a tuned circuit. The transient due to the sudden cessation of current at the time of the return stroke will excite this tuned circuit into oscillation at about 500,000 c/s, and the duration of the oscillation is such that it extends beyond the period of the return stroke and continues for the first portion of the line scan. The line scanning voltage applied to the line scanning coils is therefore modulated at 500,000 c/s and the velocity of the line scan across the tube will vary at this frequency. Since the brightness of the trace on a cathode ray tube is affected not only by the intensity of the scanning beam, but also the speed at which the beam traverses the fluorescent screen, these variations in velocity will produce variations in brightness on the screen which will be superimposed upon any picture that may be there. The effect is, of course, well known as *velocity modulation*, and it is imperative that this variation in line scan velocity should be removed. This is effected by the circuit involving V_9, R_{21} and C_{11}, which operates so as to damp out the oscillation in precisely the same manner as the circuit involving V_8, R_{18}, R_{19} and C_5 effected the suppression of the other oscillation at 50,000 c/s. The effect could, of course, be alternatively suppressed by the connection of a resistance of several thousand ohms across the secondary of the transformer TR_2, but this would result in a diminution of the line scanning amplitude which the circuit could provide, and it is therefore considered preferable to effect the suppression by means of a circuit which does not apply damping during the line scanning period. Since the operation of this type of circuit has been very fully described in connection with the elements V_8, R_{18}, R_{19} and C_5, it will not be repeated in connection with V_9, R_{21} and C_{11}.

The Frame Scanning Circuit

The frame scanning circuit comprises the valves V_1, V_2, V_3 and V_4 (see Fig. 15).

Considering the circuit in detail, we may conveniently commence with the action of the valve V_3. The resistance R_{22} and the condenser C_{12} form a relaxation oscillator in which the condenser is charged slowly from the H.T. line via the resistance R_{22}, thus generating the fundamental saw-toothed excursion for the forward stroke of the scanning, and at the appropriate moment is discharged by the valve V_3, which becomes conductive for the purpose. The alternate conductivity and non-conductivity of the valve V_3 is obtained by a circuit which is very similar to that associated with V_6 and already described for the line scanning. It is therefore unnecessary to describe the circuit associated with V_3 in detail. The components R_{22}, C_{12}, V_3, TR_3, R_{23}, R_{24}, R_{25}, R_{26}, R_{27} and R_{28} associated with the valve V_3 correspond respectively in their functions with the components R_1, C_1, V_6, TR_1, R_3, R_4, R_5, R_6, R_7, and R_8 associated with the valve V_6. The potentiometer R_{23} controls the amplitude of the generated saw-tooth and therefore the height of the received picture, and it is consequently designated **Height.** The potentiometer R_{26} controls the frequency of the frame saw-tooth, and is consequently designated **Frame Frequency.**

It is, of course, necessary to synchronise the frequency of the frame scanning waveform generated by V_3 with the incoming frame synchronising signals. It has been explained that in the case of the line scanning generator it is unnecessary, and in fact quite wrong, to separate the line synchronising signals from the frame synchronising signals. Both are required for the proper operation of the line scanning generator. The converse, however, does not apply. It is necessary to apply to the circuit of V_3 only the frame synchronising signals, since when V_3 is nearing the end of the forward stroke of the frame scanning it is in a state where it can easily be tripped by a synchronising signal, and a line synchronising signal occurring several lines before the end of the frame would trip this valve. Not only would this be quite wrong from the point of view of the normal operation of the circuit, but interlacing would be impossible. The essentials of good interlacing lie in ensuring that the frame scanning generator V_3 shall be tripped with precision at the end of every 202.5 lines. No synchronising signal of any sort must be allowed to influence this valve before the correct moment of tripping. Furthermore, when the trip occurs it must be sharp, that is to say, a strong positive pulse must be impressed upon the grid of V_3, and this pulse must rise to its full amplitude in the shortest possible time. This is achieved in the following manner.

255

The valve V_1, which corresponds exactly in its functions to the valve V_5 in the line scanning circuit, separates from the complete vision waveform applied to its grid, mixed line and frame synchronising signals, which are delivered in the positive sense from its anode. The method and conditions of operation of this valve are the same as that of V_5, and need not be described again. The anode of V_1 contains the high resistance R_{29}, and in shunt to earth is the condenser C_{13}, the time constant of the combination R_{29} C_{13} being 175 micro-seconds, which is long compared with the duration of the line synchronising signal. As in the case of the valve V_5, the application of line or frame synchronising signals to the grid of V_1 results in its anode current falling to zero, and if the condenser C_{13} were not present, the anode potential would at these times rise to the same value as the H.T. The condenser C_{13}, however, materially alters this state of affairs, and we must now examine what happens to the anode potential of V_1, firstly during line and then during frame synchronising signals.

During the forward stroke of each line, that is to say, the picture period, V_1 is conductive and its impedance is much less than the value of the resistance R_{29}. The value of the valve impedance remains stationary since, as explained above, the circuit suppresses the picture components, which therefore cannot influence the valve impedance nor consequently the anode potential. We must say, therefore, that the resistance R_{29} and the impedance of V_1 form a simple potentiometer in which the impedance of the lower arm, V_1, is so much less than that of the upper arm, R_{29}, that the potential at the junction is very low. It is in fact less than + 5 V. Approaching the matter in another way, we may say that the low impedance of V_1 effectively short-circuits the condenser C_{13}. When a line synchronising signal arrives, the impedance of V_1 becomes very high, and the short circuit is removed. During the period of synchronising signals we can in fact imagine that V_1 is not in circuit at all, and we may disregard it. Now that the short circuit across C_{13} is removed, this condenser will begin to be charged from the H.T. supply via the high resistance R_{29}, and this charging process continues for the duration of the line synchronising signal, which is 10 micro-seconds, after which the short circuit is reapplied as V_1 becomes conductive. In order to understand the working of the circuit properly, it is essential to know the exact value of the voltage which exists across the condenser at the end of the line synchronising pulse.

As is well known, the charging of a condenser is governed by an exponential law which may be expressed as follows. If a voltage E is applied across a condenser and resistance in series, as shown in Fig. 9, the voltage E_c existing across the condenser at a time t, after the initial application of the voltage E, will be given by the formula

$$E_c = E(1 - e^{\frac{-t}{CR}})$$

The Frame Scanning Circuit *(Contd)*

We may calculate the value of E_c at the end of the line synchronising pulse. Thus we have E = the value of the H.T. supply = 300 V.

CR = the time constant = $.00035 \times 10^{-6} \times .5 \times 10^6$ secs. = 175 μ sec.

t = the duration of the line sync. signal = 10 μ sec.

therefore $$\frac{-t}{CR} = \frac{-10}{175} = -.057$$

From tables we find $e^{-.057} = .944$

therefore $$E_c = 300(1 - .944) = 16.8 \text{ V}$$

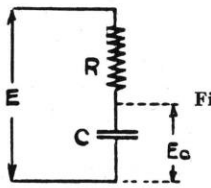

Figure 9.

This value, namely 16.8 V, therefore exists across the condenser at the end of the line synchronising pulse.

In Fig. 10 has been plotted a curve showing the increase of voltage E_c across the condenser C_{13}, as it is charged from the H.T. supply, the curve being determined by a number of points calculated in the above manner, and it will be seen that the point A on the curve represents the state of affairs at the end of a line synchronising signal, t being 10 μ sec. and E_c 16.8 V at this point.

To the upper side of C_{13} is connected the anode of the diode V_2, whose cathode is returned via the tertiary of TR_3 to the point x on the potentiometer R_{10} to R_{15}, where there is a potential of 25 to 30 V. It is a coincidence that this is also the correct potential required for the screen grid of V_1, so that the cathode of V_2 appears to be returned to the screen. The line CD has been drawn in the graph of Fig. 10 to indicate a steady value of 28 V, and it will be seen that at the end of a line synchronising signal the upper side of the condenser and the anode of V_2 reach a maximum potential of 16.8 V, which is 11.2 V negative with respect to the cathode of the diode, so that no current can pass through V_2.

Let us now consider what will happen when a frame synchronising signal occurs. The first part of such a signal to arrive will be the first broad pulse, having a duration of 40 micro-seconds. As before, during the half or whole line preceding the first broad pulse, depending upon whether we are at the end of an odd or an even frame, V_1 is conductive and C_{13} is held discharged. On the arrival of the first broad pulse V_1 becomes non-conductive and the charging of C_{13} commences, as in the case of the line synchronising signal. But this time it is continued for 40 micro-seconds, the duration of the broad pulse, at the end of which the potential of the upper side of C_{13} corresponds to point B in Fig. 10, which is seen to be 61.5 V. The moment the potential rises beyond the point P in Fig. 10, so that the anode

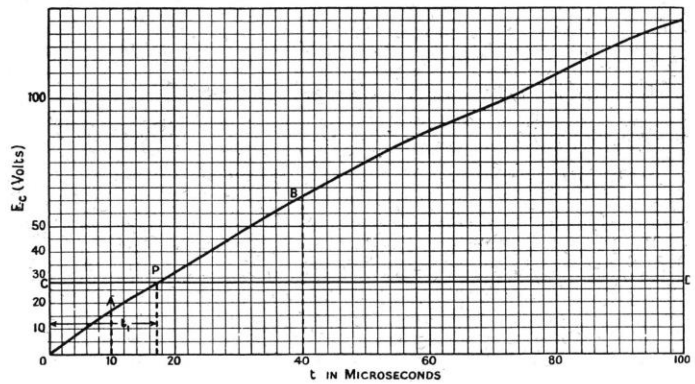

Figure 10.

of the diode becomes more positive than its cathode, the diode will pass current and a pulse corresponding with the portion PB of the curve of Fig. 10 will flow through this valve. Via the tertiary of TR_3, this pulse will be communicated in the positive sense to the grid of V_3, and this valve is accordingly tripped. It will be seen that the above arrangement effectively precludes any possibility of the frame scanning circuits being influenced by line synchronising signals, and ensures that the pulse delivered to V_3 is reasonably sharp. It is obvious that this method of separation is much superior to any method of frequency separation depending upon the fundamental difference of the frequencies of the line and frame synchronising signals. An ideal synchronising signal should have a steep wave front, that is to say, it should rise to its maximum amplitude in the shortest possible time, and it will be seen that the wave front PB of Fig. 10 which attains its maximum amplitude in $22\frac{1}{2}$ μ secs, although not as steep as that of the transmitted broad pulse, is nevertheless good.

A study of the curve of Fig. 10 will explain another effect which will be noticed in monitors having this scanning circuit. From an examination of the transmitted waveform it would be supposed that the frame scanning generator at the receiver would be tripped precisely half way along a line, and that the interlace would be observed to begin from such a point, but it is the point O of Fig. 10 which corresponds to the beginning of a broad pulse, and it is not until at least the point P is reached that the frame scanning generator will be tripped. Accordingly the interlace does not begin physically from a point half-way along the line but from a point to the right of centre and corresponding to the interval t_1 in Fig. 10. It might be thought that this would be irreconcilable with the process of interlacing, but it is not so since interlacing will be perfect if the next frame is tripped off precisely 1/50th of a second after the first one, and so on. This, of course, must be the case as the tripping of the frame scanning generator will occur at the end of each frame at a time corresponding to the point P in Fig. 10, and the occurrences in time of the points P must therefore be spaced by 1/50th of a second precisely.

The portion of the circuit so far described involving V_1, V_2 and V_3 produces a saw-toothed voltage at frame frequency, and as in the case of the line scanning we must derive from this a saw-toothed current which will flow in the frame deflection coils. In this case we are confronted with the same pair of problems as in the case of the line scanning circuit, namely, we must see that the inductance of the circuits neither prevents us from getting a truly saw-toothed current during the forward stroke, nor prevents us from obtaining a fast fly-back time. Whereas in the case of the line scanning circuit the major problem was the fly-back time, in this case the difficulty lies largely in obtaining a good scanning waveform on the forward stroke. This difference arises because the range of frequencies with which we are concerned for frame scanning is very much lower than that for line scanning. It extends from 50 to some 6,000 c/s, and is thus comparable with that which has to be considered in audio frequency circuits. The scanning coils must clearly be fed by an output transformer, and it will be remembered that in sound circuits the main source of distortion which output transformers are liable to produce is a loss of low frequencies. This loss arises because the impedance presented to the anode circuit of the output valve by the effective inductance of the transformer may at the lower frequencies be sufficiently low as to shunt away some of these frequencies. This source of distortion applies also in a frame scanning output circuit, but the requirements for linear frame scanning are much more stringent. With the constants that obtain in such circuits it would be necessary to provide an output transformer having a secondary resistance of only 1 or 2 ohms but an inductance of 1 H. It is not possible to provide a transformer having these properties which will be satisfactory in other respects, and it is owing to this difficulty that the necessity arises for the somewhat complex circuit associated with V_4.

257

The transformer TR_4 has a ratio of 30:1, a primary inductance when there is a D.C. current of 30 mA superimposed of 80 H, and a secondary leakage inductance and resistance of 2 mH and 2 ohms respectively. The inductance and resistance of the deflection coils are also 2 mH and 2 ohms. The total inductance and resistance in the secondary circuit are therefore

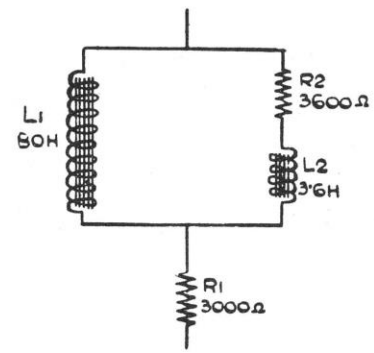

Figure 11.

4 mH and 4 ohms. Transferring this impedance to the primary side, we have, $4 \times 30^2 = 3{,}600$ ohms, and $.004 \times 30^2 = 3.6$ H. The primary resistance of the transformer is 3,000 ohms. Having these figures, we can draw the equivalent circuit of the network and impedance which the output valve V_4 actually sees in its anode. In Fig. 11, L_1 is the primary inductance, which shunts the secondary inductance and resistance L_2 and R_2, and in series with these three elements is the primary resistance R_1. The fly-back is created by suddenly stopping the saw-toothed current which flows through L_2 and R_2, and L_2 will tend to make the current die away gradually and thus to slow up the fly-back. On the other hand, the inductance L_1 will be responsible for bad waveform during the forward stroke, by shunting away the lower frequencies, and thus preventing them from building up of a linear saw-toothed current through L_2 and R_2. Arrangements are made in the circuit to compensate for both these effects.

Dealing first with the effect of L_1, it is evident that if the source of supply feeding the saw-toothed current in the network of Fig. 11 can be given a very low impedance compared both with L_2 R_2 and with L_1, the shunting effect of L_1 would be negligible because, instead of robbing current from the other branch, L_2 R_2, it would simply draw more current from the source which would be able to supply it without loss of output voltage. The source is, of course, the valve V_4 plus R_1, the effective primary resistance, and therefore this valve must be given a very low effective impedance, and R_1 must be

The Frame Scanning Circuit *(Contd)*

effectively eliminated. This is done by providing V_4 with very heavy feed-back to the extent of some 20 times. Ordinarily the grid excursion required for V_4 would be 5 V. To effect the feed-back the condenser C_{12} (Fig. 15) is reduced to 1/20th of the value which would be required were no feed-back present, so that the voltage across it, and hence the input grid excursion, rises to 20 times the normal value, or 100 V. Then, feed-back to the extent of 95 V is applied in series with C_{12} by means of the tertiary of the transformer TR_4, so that the resultant grid to cathode excursion is equal to $(100 - 95) = 5$ V, or the required amount.

The use of the tertiary winding to provide feed-back is of special interest, as it is by its use that R_1 is effectively eliminated. The tertiary is wound with the same number of turns as the primary, and the volts across it must be equal to those across the effective primary inductance L_1, and are not influenced by any considerations of primary resistance. The resistance R_1, therefore, appears as if it is lumped with the internal impedance of the output valve V_4. The degree of feed-back employed is effective to reduce the impedance of V_4 and R_1 in series to 100 ohms, and such a low impedance source can easily supply the demands of L_1 at the lower frame scanning frequencies, and the deleterious effect of this shunt inductance is thereby eliminated.

It would seem from the foregoing that we shall be faced with considerable non-linearity of scanning owing to the fact that we are allowing the output from the relaxation oscillator R_{22} C_{12} to be no less than 1/3 of the steady applied voltage, for it will be seen that the output has been raised to 100 V by reducing C_{12} some 20 times from the normal figure and yet the steady applied voltage of the H.T. is still only 300 V. This is not so, however, for the following reason. Non-linearity in any relaxation oscillator only arises because the charging cycle is accompanied by a progressive decrease of the current flowing into the condenser. If, however, the voltage applied across the combination were to increase appropriately during the charging process the current into the condenser would be maintained constant and the saw-toothed voltage across it would be linear with time. This method of compensation is used to prevent non-linearity in the present circuit. It will be seen that the feed-back from the tertiary is applied to the condenser C_{14}, which is in series with the relaxation oscillator condenser C_{12}, and during the forward stroke the potential of the lower end of C_{12} is drawn down by the feed-back to the extent of nearly 95 V, the junction of C_{12} and C_{14} being about $-$ 95 V negative to earth at the end of the forward stroke. In effect we have steadily raised the value of the applied H.T. during the forward stroke to a maximum value of 395 V so as to maintain an unvarying supply of current into the relaxation oscillator condenser C_{12}, and this artifice is very largely effective in removing non-linearity.

The distortion factor cannot be more than 5 per cent as the grid-cathode excursion is only 5 per cent of the saw-toothed input, but even this small residuum of distortion is compensated for by means to be described later.

We have still to compensate for the effect of L_2 (Fig. 11), which will now be considerably greater as a result of giving V_4 a low effective impedance. The time constant $\frac{L_2}{R_2}$ is 1 millisecond, which is comparatively short. It will, however, introduce some non-linearity into the beginning of the forward stroke, i.e. the top of the picture, and it will slow up the return stroke. The non-linearity of the beginning of the scan will clearly manifest itself as a bunching together of the lines at the top of the picture. The effect of L_2, of course, is to reduce the amplitude of the upper frequencies of the scanning current flowing in the L_2 R_2 branch, so that if we can include a circuit giving an upper frequency boost to the saw-toothed waveform, we shall be able to eliminate the effect. We can obviously do this by introducing elements into the feed-back circuit which will introduce an upper frequency loss into the feed-back, which will appear as an upper frequency gain in the output. The feed-back circuit already includes the condenser C_{14} so that the loss may satisfactorily be provided by including the resistance R_{30}. Compensation will be exact if the time constant C_{14} R_{30} is equal to the time constant $\frac{L_2}{R_2}$ which is 1 millisecond. It is convenient to make R_{30} manually adjustable, and it is accordingly designated **Waveform.** When the correct setting of this control has been found, the bunched lines at the top of the picture will be spread out until their spacing is equal to that over the remainder of the picture.

The elements C_{15} and R_{31} are provided to compensate for the small amount of residual distortion in the frame saw-tooth which is applied to the grid of V_4, and which, as was mentioned above, exists to the extent of some 5 per cent. The distortion manifests itself effectively as a loss of lower frequencies in the output waveform. Hence, an effective gain at low frequencies must be provided, which may be conveniently done by introducing a low frequency loss into the feed-back circuit, and this is the function of the elements C_{15} and R_{31}. It is also found desirable to compensate for the leakage inductance in the coupling between the primary and the tertiary. This is effected by the elements C_{16} and R_{32}, the technique in this case being similar to that adopted in many other parts of the system.

In addition to the above essential compensations, a refinement is added in the shape of means for extinguishing the cathode ray beam during the frame fly-back period. It may appear strange that this should be desirable because in theory the beam is already extinguished, since during the frame return period when nothing but frame and line synchronising signals are being radiated there can be no signal of greater amplitude than black. It

would appear, therefore, that we are attempting to extinguish a beam which is already non-existent. In practice, however, the monitor will rarely be set up exactly in accordance with the dictates of theory for the following reason. In Fig. 12 is given a typical curve showing the variation of brilliance of the scanning spot of a cathode ray tube against the modulating voltage applied to one or more of its grids. It will be observed that, as is usual in all thermionic devices, the curve, which ideally should be the straight line *ABC*,

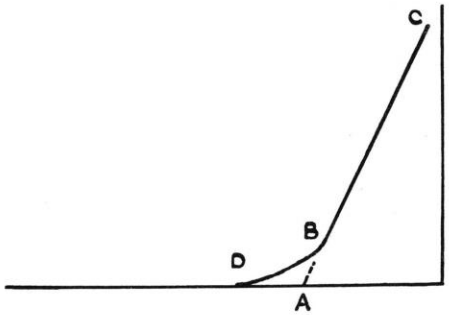

Figure 12.

has the usual bottom bend *DB*. If the curve had the ideal shape *ABC*, the **Background** control would be so set that black level corresponded to the point *A*, the beam would be completely extinguished at black level, and the setting of the monitor would correspond exactly with theoretical considerations. Owing to the existence of the bottom bend *DB*, the beam is not completely extinguished until adjustment of the **Background** control has increased the negative grid bias to that corresponding with the point *D*. If such a setting is employed, however, the bottom bend will clearly mar the reproduction of detail in the lower greys, since these tones will be darker than they should be. Consequently the background will in general be set to correspond with the point *B*, at which the blacks will look very dark indeed, and the modulation will occur over the part *BC* of the characteristic, which is reasonably linear. Individual operators will in practice choose various settings between the points *D* and *B*, and at any of these settings there is, of course, a small but finite beam current which corresponds to black level.

Let us assume for the moment that no picture is being radiated but only black level and synchronising signals. During the forward stroke of the frame scanning the fluorescent screen will be showing a very faint degree of illumination owing to the fact that black level corresponds to a finite scanning beam albeit so faint as to be considered by the operator effectively to produce black in any received picture. During the frame fly-back the beam traces a zig-zag path up the screen, being impelled vertically by the voltage corresponding to the frame fly-back and horizontally due to the continuance of the line scanning. During those portions of the fly-back period corresponding to the troughs of the synchronising signals the beam intensity will be very low indeed, if not actually zero, but during the intervals between the broad pulses comprising the frame synchronising signals, the beam intensity will correspond to black level, and since this corresponds to a finite scanning

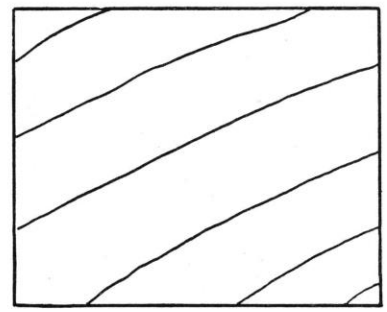

Figure 13.

beam the fluorescent screen will again be faintly illuminated. Thus during the complete cycle of the frame scan, including both the downward picture scan and upward fly-back, all the elements of the screen area will receive one traversal of the beam at black level, whilst those elements which lie in the path of the zig-zag frame return stroke in the positions corresponding to the intervals between the broad pulses will receive two traversals at black level. Remembering that owing to persistence of vision the eye will integrate the effect of repeated traversals of successive scans over the same element, it will be expected that those parts of the scanned area which in a complete cycle receive two traversals at black level will stand out more brightly than the remainder of the area which in the same period has undergone only one such traversal. We should accordingly expect to see a trace on the screen consisting of a small number of broken diagonal lines corresponding to the black level periods of the frame return stroke, while if the **Background** control is turned up so that the beam current has a finite value even in the troughs of the synchronising pulses, the diagonal lines will become continuous, as illustrated in Fig. 13. The portions in the fly-back trace corresponding to the 10 μ second intervals between the broad pulses will stand out more brightly than the 40 μ second periods of the broad pulses themselves, although this effect is not shown in Fig. 13. It will be observed that there is a total of six lines which, since the fly-back must be interlaced like the forward stroke, indicates that each fly-back is accomplished in the short time of three lines.

259

The Frame Scanning Circuit (*Contd*)

That is to say, since the fly-back commences during the first broad pulse and the broad pulses extend over four lines, the fly-back is completed within the period of the complete frame synchronising signal and well within the duration of the frame suppression pulse, which is the maximum allowable period.

Although in general such traces will only appear if the **Background** adjustment has been set at the point *B* of Fig. 12, or even higher, it has been considered that means should be included for suppressing them. Clearly the obvious solution is to make sure that the beam current is truly zero during the whole of the frame return time, and this is what is done in practice. To effect this we must apply a large negative pulse to one of the modulation electrodes of the tube during the frame return time. It will be seen that we need not specially generate a pulse for the purpose as a convenient one exists and is so far unused in the circuits already provided.

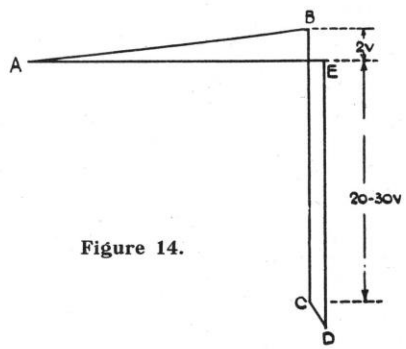

Figure 14.

Referring to Fig. 15, we already know the nature of the current which is flowing in the secondary of the frame output transformer TR_4. It is a linear frame saw-tooth. If we examine the voltage across the secondary, which occurs as a result of such current, we find that it has the form shown in Fig. 14, and, as we would expect, it consists of a frame saw-tooth due to the passage of the scanning current through the resistive components of the circuit, upon which is superimposed an impulse component due to the rapid change of flux through the effective inductance of the transformer, generated according to the familiar relation $E = L\frac{di}{dt}$. During the forward stroke *AB* of Fig. 14, the amplitude of the waveform is some 2 V, but during the return stroke, *BCDE* of Fig. 14, owing to the rapid collapse of the scanning current through the inductance, the amplitude of the waveform is some 20 V. If the pulse *BCDE* be added in the negative sense to the modulation applied to one of the modulating electrodes, it will completely extinguish the beam during the return stroke. Unfortunately, if we add the waveform of Fig. 14 to the modulation, we shall include not only the required pulse *BCDE*, but the additional portion *AB* occurring during the forward stroke, which will have the effect of imposing a frame tilt upon the received picture. We must therefore seek means of eliminating from the waveform of Fig. 14 the portion *AB*, while retaining the portion *BCDE*. This is performed by the elements R_{33}, R_{34}, C_{17} and C_{18} in Fig. 15. When the voltages corresponding to the waveform in Fig. 14 are applied to C_{17} and R_{33}, R_{34} in series, the condenser starts to charge during the time *AB*. Now, if the voltage during *AB* were constant, the current into the condenser C_{17} would gradually fall off, an effect which we know is responsible for distortion in a badly designed relaxation oscillator, but as the voltage *AB* is rising, it tends to offset the falling off of current into C_{17} and to maintain a constant current flowing into this condenser. The constant current flowing into C_{17} will produce a steady drop of voltage across R_{33}, R_{34} so that the voltage appearing across these resistances will be constant, and will not have the rising characteristics *AB* of Fig. 14. The same argument applies to the saw-tooth component *CD* shown in Fig. 14, and occurring during the return time. Whereas it is not important to eliminate *CD*, it is, as has been observed, of first importance to eliminate *AB*. Clearly the maintenance of a constant current flow into C_{17}, and consequently the exact degree of the elimination of the saw-toothed components *AB* and *CD* from the waveform of Fig. 14 will depend upon the relative values of the condenser C_{17} and the resistances $R_{33} + R_{34}$, but the elimination will be exact if the time constant C_{17} $(R_{33} + R_{34})$ is equal to the time constant of the scanning coils. The time constant of the scanning coils, for which $L = 2$ mH and $R = 2$ ohms, is 1,000 μ sec and the time constant C_{17} $(R_{33} + R_{34})$ has been given approximately the same figure, the error ($R_{33} + R_{34}$ should be .09 instead of .1 megohm) being due to the necessity of using standard components and being inappreciable in practice. Owing to the fact that the extinguishing voltage need only be some 10 per cent of the amplitude of the pulse *BCDE*, the total resistance is divided into two parts, R_{33} and R_{34}, which form a potentiometer giving at the junction the correct amplitide. The pulse *BCDE*, known as the black-out voltage, which exists across R_{34}, is applied to the grid of the receiving cathode ray tube. C_{18} removes a last trace of non-linearity. Since the normal modulation is applied to the cathode of this tube, both the control grids will normally be returned to earth, but in order to pick up the black-out voltage the grid of the emiscope is returned to the top of R_{34}.

The Supply Unit, Type 2a

This unit provides the L.T. and H.T. power supplies which are required by the Amplifier and Focus Unit, the Separating and Scanning Unit, and the Emiscope Heater. These supplies are three in number :

1. An A.C. L.T. supply of 13 V, 5 A for all valves except the three diodes V_2, V_8 and V_9 of the Separating and Scanning Unit.
2. An A.C. L.T. supply of 4 V, 2.6 A for the above three diodes and the emiscope heater.
3. A D.C. H.T. supply of 300 V, 190 mA for the Amplifier and Focus Unit and the Separating and Scanning Unit.

The circuit of the Supply Unit is given in Fig. 16. The mains at 230 V are applied to the terminals T_1 and T_2, and proceed via the switches AA to the transformer TR_1. The secondary S_1 of this transformer provides A.C. L.T. at 4 V for the three diodes and the emiscope heater. The secondary S_4 provides A.C. L.T. at 13 V for the other valves in the Amplifier and Focus Unit and in the Separating and Scanning Unit. The secondary S_2 supplies the heater of the rectifier V, which will provide the 300 V H.T. It is desirable to allow all the valves in the monitor and the heater of the emiscope to warm up for a minute before either the 300 V H.T. supply for the valves or the 7,000 V E.H.T. supply for the emiscope gun are switched on. In order to effect this the anodes of the rectifier V are separately supplied from the transformer TR_2, and the mains input to the primary of this transformer are not taken from the mains directly but from the contactor G, which is closed by the thermal delay switch TD after this has been heated for one minute from the secondary S_3 of the transformer TR_1. To apply the delay also to the 7,000 V E.H.T. supply which is generated in a separate unit, the mains input to this unit is also taken from the contactor G via the switches BB and the terminals T_3 T_4. The operation therefore is as follows. The switches AA and BB being closed, the transformer TR_1 is energised and the heaters of all the valves in the monitor, the emiscope heater, the heater of the valve V in the Supply Unit, and the heater of the thermal delay unit are all energised. After one minute the contacts K_1 of the thermal delay switch close, and operate the contactor G from 230 V A.C. derived in parallel with the primary of the transformer TR_1. The contactor G operates, and the contacts K_2 apply the mains to the primary of the transformer TR_2, to the 7,000 V E.H.T. unit, and to the operating coil of the contactor G, so that by this last operation they short circuit the contacts K_1. If now the thermal delay switch TD were allowed to remain heated from the secondary S_3 of the transformer TR_1, it would not be ready to apply the delay again in the event of the mains becoming accidentally switched off. To assure that in such circumstances the delay would be reapplied, the contacts K_3 of the contactor G remove the secondary S_3 from the thermal coil of the thermal delay switch TD, allowing it to cool. The contacts K_1 will now open, but the contactor G will remain operated, since the contacts K_2 have already short-circuited the contacts K_1. On the other hand, should the mains supply fail, the contactor G will open and will not reclose.

The switches AA and BB are provided to allow the monitor to be energised with the exception of the 7,000 V E.H.T., a state of affairs which will

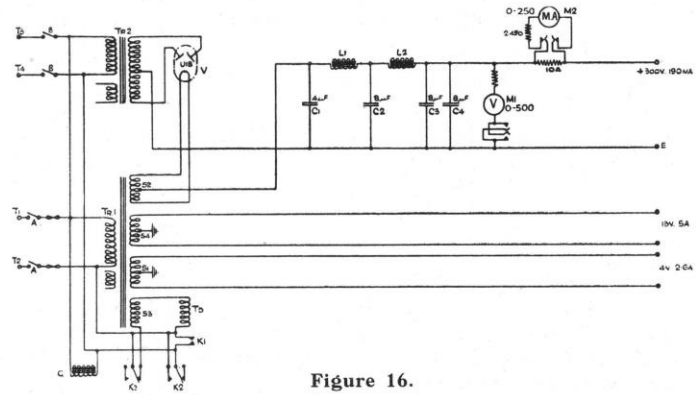

Figure 16.

frequently be required during testing. The operation of these switches is interlocked for the following reason. If the switches AA were opened before BB, then all the supplies would be withdrawn, since the switches AA would break the primary of TR_1 directly, and the contactor G would fall out and break the primary of TR_2 and the supply to the 7,000 V unit. The scanning would therefore collapse and the emiscope beam would fade away. The tube, however, would be liable to damage because the scanning would collapse considerably in advance of the cessation of the beam owing to the storage of the smoothing condensers of the 7,000 V unit. By the time the scanning had collapsed there would still be a considerable residual beam intensity directed in the form of a small spot against the centre of the emiscope screen, which would cause a photo-electric burn. It is essential therefore that the 7,000 V unit should be switched off before the scanning. To effect this the switches AA and BB are interlocked so that AA cannot be opened until BB has been opened. The design of the interlock further brings about the feature that when both switches are open it is impossible to close BB until AA has been closed, this feature not, however, being strictly necessary.

The output from the rectifier V is followed by a normal type of smoothing circuit involving the inductances L_1 and L_2, and the condensers C_1, C_2, C_3 and C_4. The output voltage is measured by the voltmeter M_1, and the total output feed by the milliammeter M_2.

261

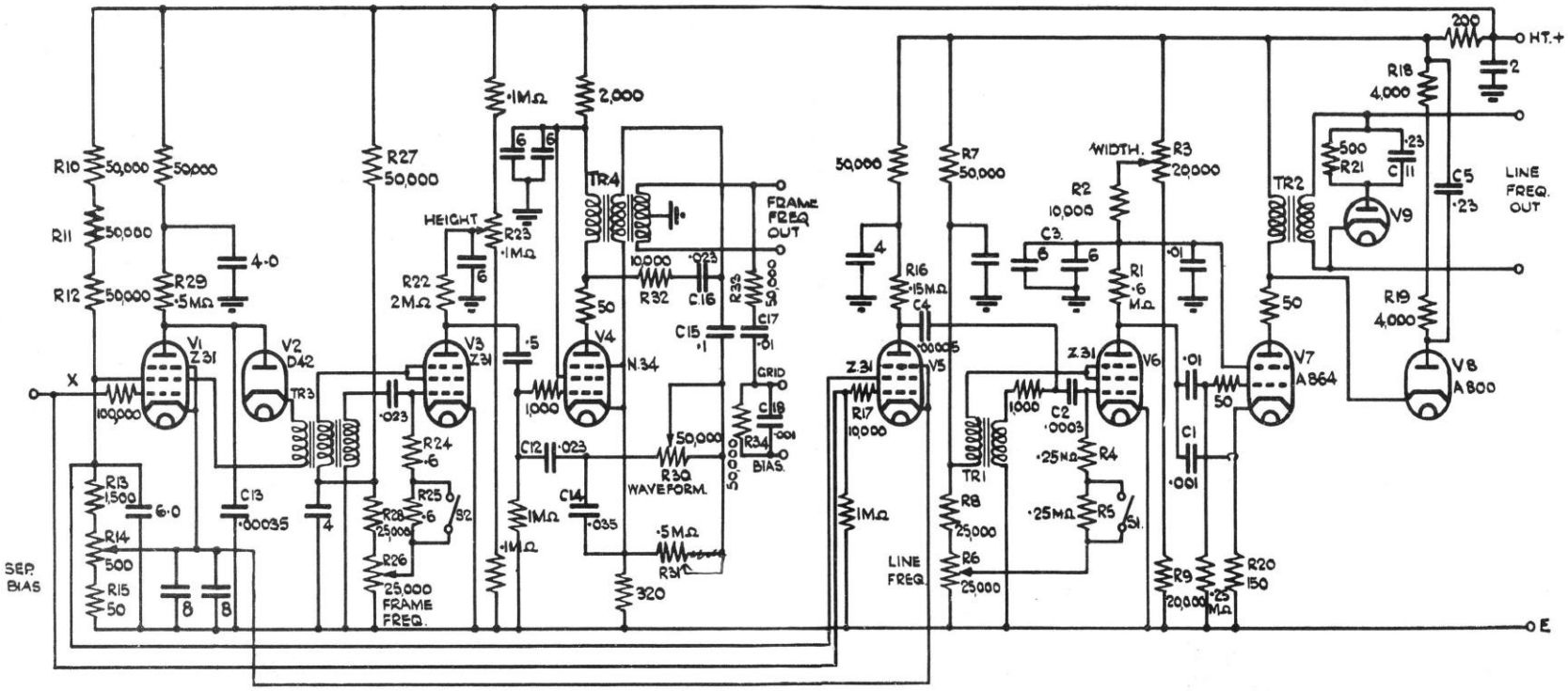

Figure 15. The Separating and Scanning Unit

The 7,000 V Unit

A 7,000 V E.H.T. supply is, as has been explained, required for the first and second anodes of the cathode ray tube, and this is generated by a 7,000 V Unit, the circuit of which is given in Fig. 17.

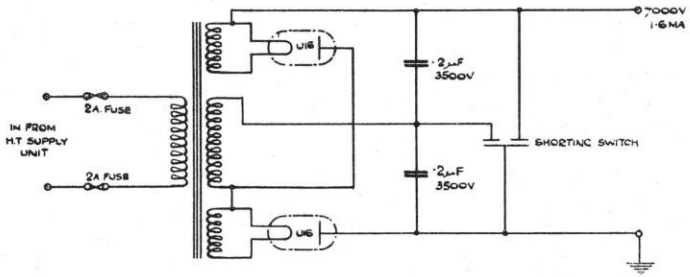

Figure 17.

This is a straightforward voltage doubler rectifier, which will be self explanatory from the circuit. It is provided with an automatic shorting switch, also shown in the diagram, which operates when the cover is removed and thus prevents danger of shock.

Operation

Assuming that the apparatus has not in any way been adjusted, the full procedure for this will be as follows.

The mains connection should be plugged into the mains at 230 V 50 C., and the earthing terminal connected to earth. The input should be connected to the output of the Distribution Amplifier at 140 ohms, and the concentric terminating plug should be inserted in its socket. The mains having been switched on, the switches *AA* and *BB* should be closed. The valves and emiscope heater will now warm up, and after a minute the thermal delay switch will close the contactor *G* and the scanning and beam will be established. A camera should be set up and a picture obtained on the system. The **Background** and **Gain** controls should be set in any convenient positions which will give a picture on the screen. In all probability the picture will not be synchronised, and the **Frame Frequency** and **Line Frequency** controls should be adjusted until the picture is in synchronism. Should it be found impossible to synchronise the picture, then the control designated **Sep. Bias** should be rotated to a new position, and further adjustments made to the **Frame** and **Line Frequency** controls.

The **Focus** control should be adjusted until the lines are as sharply defined on the screen as possible.

It is likely that the scanning field will not be centrally located on the end of the tube, and the next operation is to effect this adjustment by means of the **Shift** control and the position of the shift coils. The **Height** and **Width** controls should now be adjusted so that the width and height of the picture are somewhat less than the dimensions of the mask, and the **Waveform** control should be adjusted so that the spacing of the lines at the top of the field is as even as the spacing at the bottom. The **Shift** control should be adjusted and the effect on the picture noted. If the shift coils are properly orientated, adjustment of the **Shift** control will be all that is necessary to centralise the picture. If, however, the shift coils are not properly set, then adjustment of the **Shift** control will clearly not move the picture back to the centre from its displaced position. In this case the monitor should be switched off and withdrawn from the cabinet, when the **Shift** coils may be orientated to a new position. After switching on again, a further adjustment should be made to the **Shift** control, and if its action is still not satisfactory the monitor must be switched off and further adjustments made to the position of the shift coils. This procedure should be repeated until operation of the **Shift** control will bring the scanning field exactly to the centre of the screen. The **Height** and **Width** controls may now be adjusted until the scanning field exactly fits the limits of the mask, which are designed so as to demarcate a picture having an aspect ratio of 5 : 4.

The next adjustment which should be fixed is that of the control designated **Sep. Bias.** This control should be rotated in either direction from the existing setting, and it will be observed that at certain limits in either direction the synchronising will fail. If the control is rotated too far in the anti-clockwise direction synchronising will be impossible, but if it is adjusted too far in the clockwise direction the synchronising will not be impossible, but will be unsteady and there will be distortion of the position of detail in the picture, the latter having a peculiarly jagged appearance. This is, of course, due to the fact that vision signals are now present in the scanning circuits and have not been properly eliminated by the separating valves in the Separating and Scanning Unit. The **Sep. Bias** control should be set approximately half way between these two extremes, in which circumstances a good interlace should be obtained. Since the ultimate criterion by which the setting of the **Sep. Bias** control is judged is the interlacing, this control should be further finely adjusted until the operator considers that the interlacing is the best which can be obtained.

The **Line** and **Frame Frequency** controls should now be further checked, and in each case an optimum position between two extremes can be found. The line hold is particularly firm, and there is no doubt whatever as to its setting. Care should be taken, however, with the **Frame Frequency** control as the final adjustment of this will affect the interlacing. The hold is quite strong, but it will be observed that towards the extremes of the

range on which synchronising is obtained interlacing will disappear and the picture will be scanned in 202 lines. This is particularly the case at the setting which tends to make the picture float downwards. Again, the final adjustment is that which gives the most even interlacing.

Now that an interlace has been secured, the **Waveform** and **Focus** controls should both be finely adjusted, the former to make the spacing between the lines at the top of the picture the same as that at the bottom, and the latter to define the lines as sharply as possible.

The final operations of adjustment are concerned with the **Amp. Preset, Gain,** and **Background** controls. The **Amp. Preset** control may be accurately set in the following manner. The monitor is switched on normally, but the input from the Distribution Amplifier and the concentric terminating plug are both removed. A high resistance voltmeter should be connected across either the picture input socket or the concentric terminating socket, and the **Amp. Preset** control adjusted until a reading of ~~2 V~~ 3.5v is obtained. This is the most accurate method of setting this control, but should it become mis-set and it be desirable to reset it without the aid of a voltmeter, then the following method may be adopted. The Picture Monitor should be switched on and supplied normally from the Distribution Amplifier and an input of black level and syncs should be obtained. The **Background** control should be rotated until a visible field is obtained, and the **Gain** control rotated backwards and forwards. If the **Amp. Preset** control is properly set, this operation of the **Gain** control should make no difference to the brightness of the field, but if the **Amp. Preset** control is mis-set in one direction or the other, then an increase of gain will either increase or reduce the brightness of the field. The **Amp. Preset** control should accordingly be adjusted until rotation of the **Gain** control makes no difference to the brightness of the field.

The final operation is the adjustment of the **Gain** and **Background** controls. Assuming that the monitor is being fed with normal picture, the **Gain** should be rotated fully anti-clockwise, and the **Background** control set until the scanning field is almost invisible when viewed from a normal distance. The **Gain** control may now be turned up until the picture is fully modulating the emiscope. Care should be taken to avoid an excessively contrasted picture, which may be produced on the one hand by excessive gain which will over emphasise the white parts of the picture and in the limit lead to defocusing of the spot and blurring, and on the other hand by too low a setting of the **Background,** which tends to spoil the detail in the darker parts of the picture by rendering them at unnecessarily dark tones. The **Background** should in general be set so that the blacks are of an agreeable tone in respect of the standing illumination in the room.

Testing

The following measurements should be made periodically to ensure that the apparatus is behaving normally. For this purpose the unit may be withdrawn from its case and the switches *BB* closed, thus energising the Separating and Scanning Unit and the Amplifier and Focus Unit, but the switches *AA* should remain open as it is both unnecessary and unsafe to energise the 7,000 V Unit with the chassis withdrawn from the case.

The Separating and Scanning Unit. The following voltage measurements should be made with a high resistance voltmeter.

Valve	*Screen Voltage*	*Cathode Voltage*
V_1	25—30	3.5
V_3	150	0
V_4	250	6
V_5	25—30	3.5
V_6	130	0
V_7	140	8

For convenience in measurement, the cathodes of V_4 and V_7 are each brought out to red studs at adjacent points on the chassis. The black studs adjoining each red stud are earthed.

The Amplifier and Focus Unit. The input from the Distribution Amplifier and the concentric terminating plug should both be removed, and a high resistance voltmeter should be connected between the inner of one of the input sockets and earth, when a reading of 3.5 V should be obtained. If the reading differs from 3.5 V, adjust the **Amp. Preset** control until the correct reading is obtained. Having done this, the following series of voltage measurements may be made with the high resistance voltmeter to ascertain if the performance of the circuit is correct.

Point of Measurement	*Voltage*
Anode of V_1	190
Cathode of V_1	11
Cathode of V_2	60
Screen of V_1	250
Screen of V_2	250
Voltage across C_6	8

Three of the above measuring points have been brought out to studs on the side of the chassis. The upper red stud is connected to the cathode of V_2. The centre blue stud is connected to the top of C_6. The lower red stud is connected to the cathode of V_1.

Supply Unit. The following outputs should be obtained from the various terminals of the Supply Unit.

Between terminals 21	13 V A.C.
Between terminals 22	4 V A.C.
Between terminal 4 and earth	300 V D.C.