RCA VICTOR

TELEVISION RECEIVERS—MODELS

21-RT-8202, 21-RT-8425
21-T-8202-5-7 & U, 21-T-8265-7 & U
21-T-8375-6-7 & U, 21-T-8395-7 & U
21-T-8405-7 & U, 21-T-8425-6-7-8 & U
21-T-8445-7-8 & U, 21-T-8465-6-7-8 & U
21-T-8485-6-7 & U

Chassis Nos. KCS113A, B, E, F, H, K, P, R

— Mfr. No. 274 —

SERVICE DATA

— 1957 No. T6 —

PREPARED BY COMMERCIAL SERVICE
RCA SERVICE CO., INC.
CAMDEN 8, N. J.
FOR
RADIO CORPORATION OF AMERICA
RCA VICTOR TELEVISION DIVISION

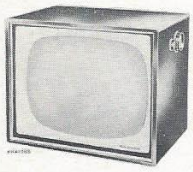

"The CLEMENT"
Model
21-RT-8202—Black

"The DALTON"
Models
21-T-8202(U)—Black
21-T-8205(U)—Mah. Gr.
21-T-8207(U)—Oak Gr.

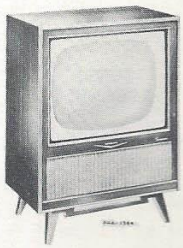

"The DIETRICH"
Model
21-RT-8425—Mah. Gr.

"The LONGPORT"
Models
21-T-8425(U)—Mah. Gr.
21-T-8426(U)—Wal. Gr.
21-T-8427(U)—Oak Gr.
21-T-8428(U)—Birch Gr.

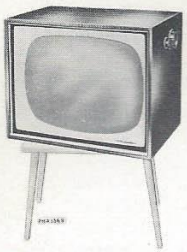

"The EVANS"
Models
21-T-8265(U)—Mah. Gr.
21-T-8267(U)—Oak Gr.

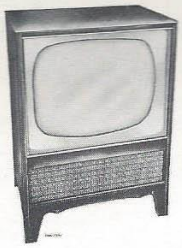

"The FIELDING"
Models
21-T-8375(U)—Mah. Gr.
21-T-8376(U)—Wal. Gr.
21-T-8377(U)—Oak Gr.

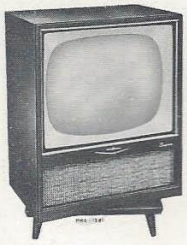

"The COOPER"
Models
21-T-8395(U)—Mah. Gr.
21-T-8397(U)—Oak Gr.

"The LANGSTON"
Models
21-T-8405(U)—Mah. Gr.
21-T-8407(U)—Oak Gr.

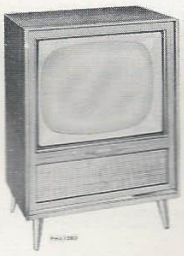

"The ASHMEAD"
Models
21-T-8445(U)—Mah. Gr.
21-T-8447(U)—Oak Gr.
21-T-8448(U)—Birch Gr.

"The GARVEY"
Models
21-T-8465(U)—Mah. Gr.
21-T-8466(U)—Wal. Gr.
21-T-8467(U)—Oak Gr.
21-T-8468(U)—Birch Gr.

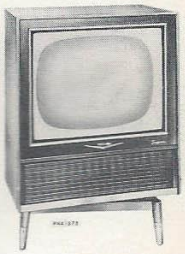

"The HARDING"
Models
21-T-8485(U)—Mah. Gr.
21-T-8486(U)—Wal. Gr.
21-T-8487(U)—Oak Gr.

GENERAL DESCRIPTION

All models are "21 inch" television receivers. Models without a "U" designation in the model number are receivers with VHF only and feature full 12 channel VHF coverage. Models with the "U" designation in the model number are UHF/VHF receivers and feature full 12 channel VHF coverage plus any UHF channels desired.

All models include intercarrier FM sound system; ratio detector; improved picture brilliance; A-F-C horizontal hold; stabilized vertical hold; and reduced hazard high voltage supply.

Models 21-RT-8202 and 21-RT-8425 are remote control models. These receivers can be operated from a remote location and at the receiver.

SUPPLEMENTARY INFORMATION

Issue	Subject

List related Supplements and Service Tips above.

First Edition—First Printing 5-29-57

Printed in U. S. A.

ELECTRICAL SPECIFICATIONS

INDEX

RCA TUBE COMPLEMENT

Tube Used	Function
VHF Tuner	
(1) RCA 6BQ7A	R-F Amplifier
(2) RCA 6CQ8	R-F Oscillator and Mixer
UHF/VHF Tuner	
(1) RCA 6AF4A	UHF Oscillator
(2) RCA 6BQ7A	VHF R-F Amplifier
(3) RCA 6CQ8	VHF R-F Oscillator and Mixer UHF I-F Amplifier

A K3D or a 1N82 crystal is used as the UHF mixer.

All Models	
(1) RCA 6CF6	1st Picture I-F Amplifier
(2) RCA 6CB6	2nd Picture I-F Amplifier
(3) RCA 6CB6	3rd Picture I-F Amplifier
(4) RCA 6AW8A	Video Ampl. & 1st Sync.
(5) RCA 6AU6	Sound I-F Amp.
(6) RCA 6DT6	Sound Detector & Audio Amp.
(7) RCA 6DS5	Audio Output
(8) RCA 6CG7	Sync. Output & Vert. Osc.
(9) RCA 6CZ5	Vertical Sweep Output
(10) RCA 6CG7	Horizontal Sweep Oscillator and Control
(11) RCA 6DQ6A	Horizontal Sweep Output
(12) RCA 6AU4GTA	Damper
(13) RCA 1X2B	High Voltage Rectifier
(14) RCA 5U4GB	Low Voltage Rectifier
(15) RCA 21CEP4	Kinescope
(16) RCA 6AQ5A	Audio Repeater (KCS113H and KCS113K only)

A crystal diode is used for the Picture 2nd Detector.

CHASSIS DESIGNATIONS

CHASSIS	TUNER ASSEMBLY	TUNER Sub-assemblies	MODELS
KCS113A	KRK62A	KRK46C	21-T-8202 21-T-8205 21-T-8207 21-T-8265 21-T-8267
KCS113B	KRK62B	KRK47C KRK64A	21-T-8202U 21-T-8205U 21-T-8207U 21-T-8265U 21-T-8267U
KCS113E	KRK62E	KRK46C	21-T-8425 21-T-8426 21-T-8427 21-T-8428 21-T-8445 21-T-8447 21-T-8448 21-T-8465 21-T-8466 21-T-8467 21-T-8468 21-T-8485 21-T-8486 21-T-8487
KCS113F	KRK62F	KRK47C KRK64A	21-T-8425U 21-T-8426U 21-T-8427U 21-T-8428U 21-T-8445U 21-T-8447U 21-T-8448U 21-T-8465U 21-T-8466U 21-T-8467U 21-T-8468U 21-T-8485U 21-T-8486U 21-T-8487U
KCS113H	KRK62C	KRK46F	21-RT-8202
KCS113K	KRK62H	KRK46F	21-RT-8425
KCS113P	KRK62T	KRK46C	21-T-8375 21-T-8376 21-T-8377 21-T-8395 21-T-8397 21-T-8405 21-T-8407
KCS113R	KRK62U	KRK47C KRK64A	21-T-8375U 21-T-8376U 21-T-8377U 21-T-8395U 21-T-8397U 21-T-8405U 21-T-8407U

PICTURE SIZE.... Approx. 262 sq. ins. on a 21CEP4 Kinescope

TELEVISION R-F FREQUENCY RANGE

VHF Models

All 12 television channels, 54 mc. to 88 mc., 174 mc. to 216 mc.

UHF/VHF Models

Any of 70 UHF channels.....470 mc. to 890 mc.

Any of 12 VHF channels, 54 mc. to 88 mc., 174 mc. to 216 mc.

INTERMEDIATE FREQUENCIES

Picture I-F Carrier Frequency.....45.75 mc.

Sound I-F Carrier Frequency.....41.25 mc.

POWER RATING.....195 watts

POWER INPUT.....117 Volts AC, 60~

SWEEP DEFLECTION.....Magnetic

FOCUS.....Electrostatic

ANTENNA INPUT IMPEDANCE.....300 ohms balanced

HIGH VOLTAGE WARNING

OPERATION OF THIS RECEIVER OUTSIDE THE CABINET OR WITH THE COVERS REMOVED, INVOLVES A SHOCK HAZARD FROM THE RECEIVER POWER SUPPLIES. WORK ON THE RECEIVER SHOULD NOT BE ATTEMPTED BY ANYONE WHO IS NOT THOROUGHLY FAMILIAR WITH THE PRECAUTIONS NECESSARY WHEN WORKING ON HIGH VOLTAGE EQUIPMENT. DO NOT OPERATE THE RECEIVER WITH THE HIGH VOLTAGE COMPARTMENT SHIELD REMOVED.

KINESCOPE HANDLING PRECAUTIONS

DO NOT INSTALL, REMOVE OR HANDLE THE KINESCOPE IN ANY MANNER UNLESS SHATTERPROOF GOGGLES ARE WORN. PEOPLE NOT SO EQUIPPED SHOULD BE KEPT AWAY WHILE HANDLING KINESCOPES. KEEP THE KINESCOPE AWAY FROM THE BODY WHILE HANDLING.

OPERATING INSTRUCTIONS

The following adjustments are necessary when turning the receiver on for the first time.

VHF OPERATION ALL MODELS

1. Push in the "ON-OFF" switch and advance the SOUND VOLUME control to approximately mid-position.
2. Set the VHF CHANNEL SELECTOR to the desired channel.
3. Adjust the VOLUME control for suitable volume.
4. Turn the BRIGHTNESS control fully counter-clockwise, then clockwise until a pattern appears on the screen.
5. Adjust the VERTICAL hold control until the pattern stops vertical movement.
6. Adjust the HORIZONTAL hold control until a picture is obtained and centered.
7. Adjust the FINE TUNING, CONTRAST and BRIGHTNESS controls for suitable picture control and brightness.
8. When the set is turned on again after an idle period it should not be necessary to repeat the adjustments.
9. If the positions of the controls have been changed, it may be necessary to repeat steps 1 through 8.

UHF OPERATION

1. Turn the UHF CHANGEOVER switch to the UHF position.
2. Push in the "ON-OFF" switch and advance the SOUND VOLUME control to approximately mid-position.
3. Tune in the desired UHF channel by turning the UHF TUNING control to the channel selected.
4. Repeat steps 3 through 8 as outlined under VHF operation.

REMOTE CONTROL MODELS

Models 21-RT-8202 and 21-RT-8425 are equipped for remote control operation. The receiver is turned on by pressing the "On-off" switch on top of the receiver or on the remote control unit. Channels are selected automatically in sequence by momentarily pressing the channel selector switch on the receiver or at the remote location. The channels received will be determined by the presetting of the thirteen switches of S151, the remote control selector switch, located on the back of the receiver. (Refer to page 16 for instructions.)

In addition to the automatic selection of channels, the channel selector may be operated manually at any time.

The volume of sound may be controlled locally or by means of the volume control on the remote control unit. It should be noted, however, that full control of the sound level is obtained when the unused volume control is first turned to maximum.

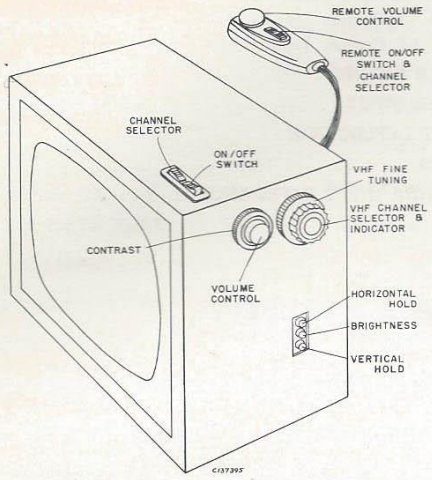

Figure 1—Receiver Operating Controls (Remote Control Models)

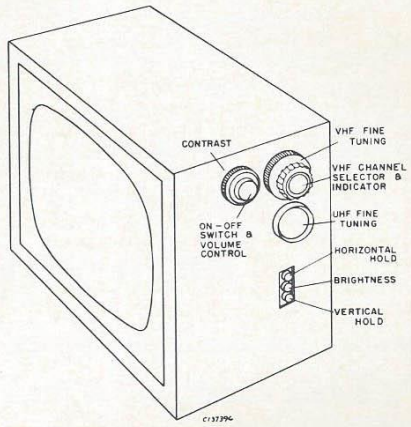

Figure 2—Receiver Operating Controls (UHF-VHF Models)

UNPACKING

These receivers are shipped complete in cardboard cartons. The kinescope is shipped in place in the receiver.

Take the receiver out of the carton and remove all packing material.

Make sure that all tubes are in place and are firmly seated in their sockets.

Check to see that the kinescope high voltage lead clip is in place.

Connect the antenna or antennas to be used, to the terminals at the rear of the receiver. The cabinet antenna may be employed where local conditions indicate satisfactory reception can be obtained.

ANTENNA INPUT

VHF Models—The KRK62A, C, E, H, T tuner units are designed for VHF reception only with a 300 ohm antenna input provided.

UHF/VHF Models—The KRK62B, F, U tuner units are designed for UHF/VHF reception with individual 300 ohm inputs provided for UHF and VHF use. When using a UHF or VHF antenna only, or both, connect the transmission line(s) to the proper antenna terminals at the rear of the receiver.

When a combination UHF/VHF antenna is to be used, having a single transmission line, connect as shown in Figure 3 to crossover network fastened to rear cover.

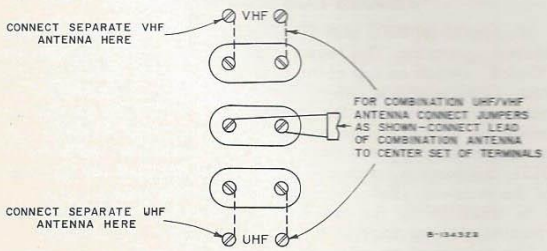

Figure 3—Combination UHF/VHF Antenna Matching

CHECK FOR PROPER OPERATION

Push in the power switch to the "on" position and check the operation of the receiver.

Each unit has been completely and accurately adjusted at the factory and should operate normally at this point. However, a check of all the various functions should be performed. Adjustment should be made as outlined below, only where an indication of improper operation is evident.

DEFLECTION YOKE ADJUSTMENT

If the lines of the raster are not horizontal or squared with the picture mask, rotate the deflection yoke until this condition is obtained. Tighten the yoke clamp screw.

FOCUS

An electrostatic focus type kinescope is employed in these receivers. The receivers operate with fixed focus, having a fixed voltage applied to the focusing electrode.

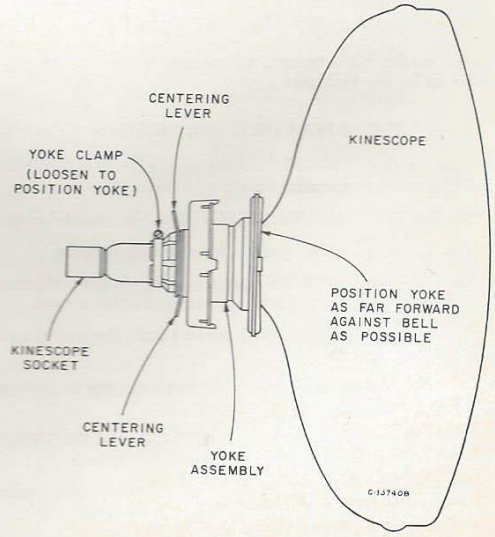

Figure 4—Yoke and Magnet Adjustments

CHECK OF HORIZONTAL OSCILLATOR ADJUSTMENT

Turn the horizontal hold control to the extreme clockwise position. The picture should be out of sync, with approximately eight bars slanting downward to the left. Turn the control counter-clockwise slowly. The number of diagonal black bars will be gradually reduced and when only 1½ to 3 bars sloping downward to the left are obtained, the picture will pull into sync upon slight additional counter-clockwise rotation of the control. The picture should remain in sync for approximately one-quarter of a full turn of additional counter-clockwise rotation of the control. Continue counter-clockwise rotation until the picture falls out of sync. Rotation beyond fallout position should produce between 2 and 5 bars before interrupted oscillation (motorboat occurs). Interrupted oscillation (motorboat) should be reached before full counter-clockwise rotation.

ADJUSTMENT OF HORIZONTAL OSCILLATOR

If in the above check the receiver failed to hold sync over approximately one-quarter of a full turn of counter-clockwise rotation of the control from the pull-in point, it will be necessary to make the following adjustments.

The width and drive adjustments should be properly set, as explained in paragraph below, before adjusting the sine wave coil.

Set the sine wave coil L601 fully counter-clockwise.

Adjustment of the horizontal frequency control in the counter-clockwise direction will show a multiple numbers of bars before "motorboat" occurs. Adjust the sine wave coil L601 until 3 or 4 bars are present before "motorboat" occurs, when the horizontal frequency control is rotated counter-clockwise from the fall out point.

CENTERING ADJUSTMENT

Centering is accomplished by means of two levers on the back of the yoke. By alternately rotating one magnet with respect to the other, then rotating both simultaneously around the neck of the tube, proper centering of the picture can be obtained.

WIDTH AND DRIVE ADJUSTMENTS

Set the horizontal control at the "pull-in" point. Set the width coil maximum counter-clockwise and adjust horizontal drive trimmer counter-clockwise until a bright vertical line appears in the middle of the picture then clockwise until the bright line just disappears. If no line appears set the drive trimmer at maximum counter-clockwise position.

At normal brightness adjust the width control L102 to obtain ¾" overscan at each side with normal line voltage.

Readjust the drive trimmer C109 as was done previously.

HEIGHT AND VERTICAL LINEARITY ADJUSTMENTS

Adjust the height control (R107 on chassis rear) until the picture overscans approximately ⅝" at both top and bottom. Adjust vertical linearity (R112 on chassis rear), until the test pattern is symmetrical from top to bottom.

VHF R-F OSCILLATOR ADJUSTMENTS

Tune in all available stations to insure that the receiver r-f oscillator is adjusted to the proper frequency on all channels. If adjustments are required, these should be made by the method outlined in the alignment procedure on pages 12 and 13.

Adjustments for channels 2 through 12 are available through the holes on the front of the tuner. Adjustment for channel 13 is on top of the tuner chassis. The oscillator for the UHF tuner section of the UHF/VHF tuners should only be adjusted by the method outlined on page 14.

FM TRAP ADJUSTMENT

In some instances interference may be encountered from a strong FM station signal. A trap is provided to eliminate this type of interference. To adjust the trap tune in the station on which the interference is observed and adjust the FM trap for minimum interference in the picture. The trap is L5 and is located on the rear of the antenna matching unit.

CAUTION.—In some receivers, the FM trap L5 will tune down into channel 6 or even into channel 5. If channels 5 or 6 are to be received, check L5 to make sure that adjustment does not affect sensitivity on these two channels.

KINESCOPE AND SAFETY GLASS CLEANING

The front safety glass may be removed to allow for cleaning of the kinescope faceplate and the safety glass if required.

Table models have a "U" shaped channel under the front top edge of the cabinet, in front of the top of the safety glass. Take out the screws holding the channels and remove the channel and safety glass.

Console models have a "U" shaped channel in front of the top edge of the safety glass and also at the bottom edge. Pry off the top and bottom channels starting at the extreme ends.

Insert the blade of a small screwdriver in one of the vertical slots in the middle of a retainer at the top of the safety glass. Slide the bar to the right to release the retainer. Refer to Figure 5.

The bottom retainers are removed in a similar manner except the slide bar is moved to the left.

The Kinescope faceplate and the safety glass should only be cleaned with a soft cloth and "Windex" or similar cleaning agent.

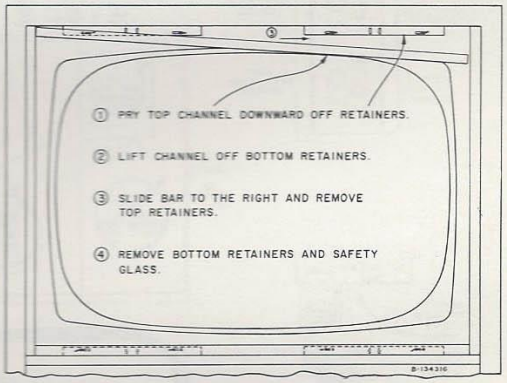

Figure 5—Safety Glass Removal

CHASSIS REMOVAL

To remove the chassis from the cabinet for repair or installation of a new kinescope, remove the control knobs, the cabinet back, unplug the speaker cable, the kinescope socket, the antenna cable, the yoke and high voltage cable. Take out the screws and nuts holding the chassis. Withdraw the chassis from the back of the cabinet.

REMOTE CONTROL MODELS

In addition to the above, it is necessary to unplug the remote control unit and the cable for the local "on-off"/channel selector switch. Remove the preselector slide switch assembly and the corner brace for the remote control unit.

CHASSIS REAR VIEW

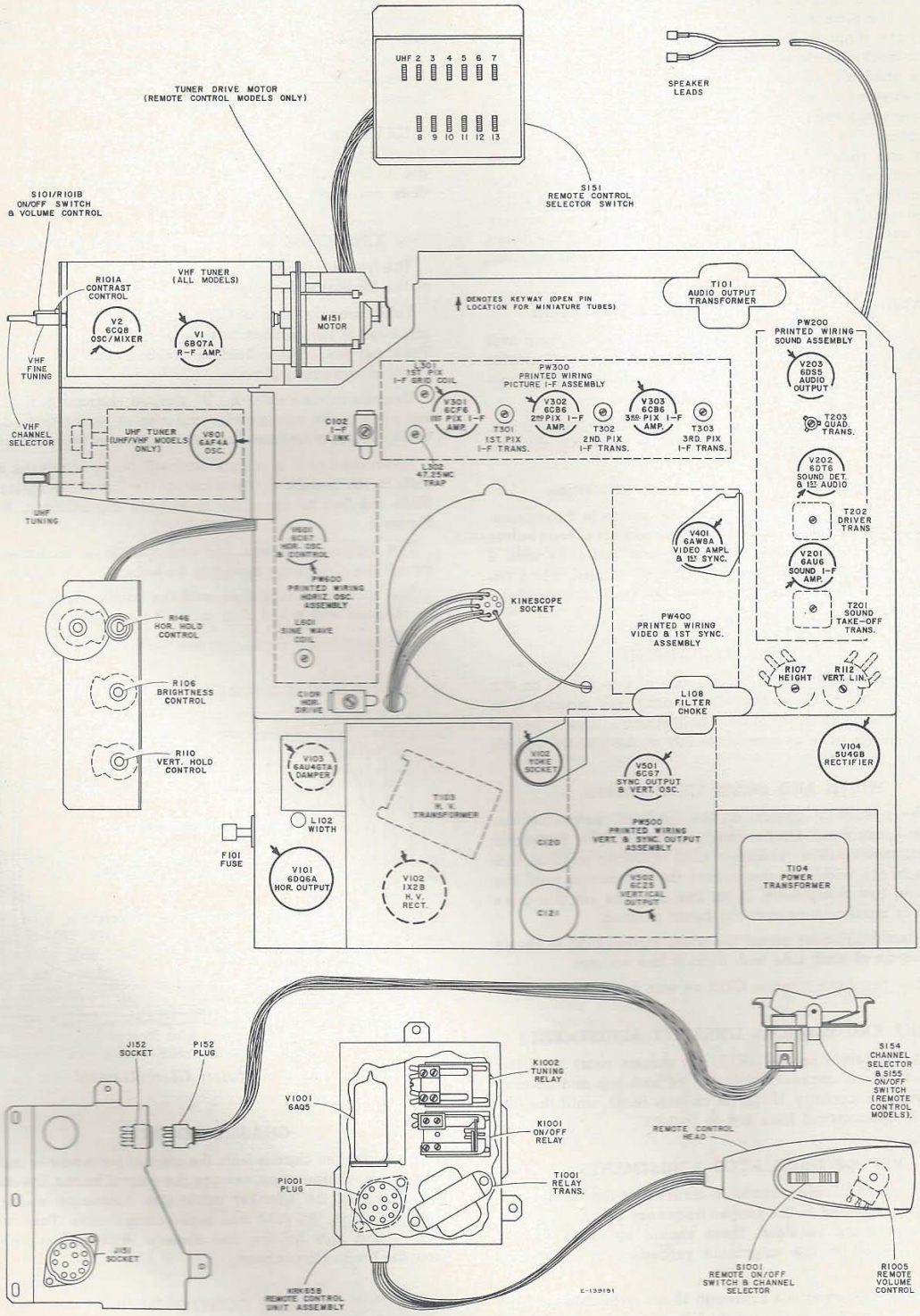

Figure 6—Chassis Rear View (Tube Side)

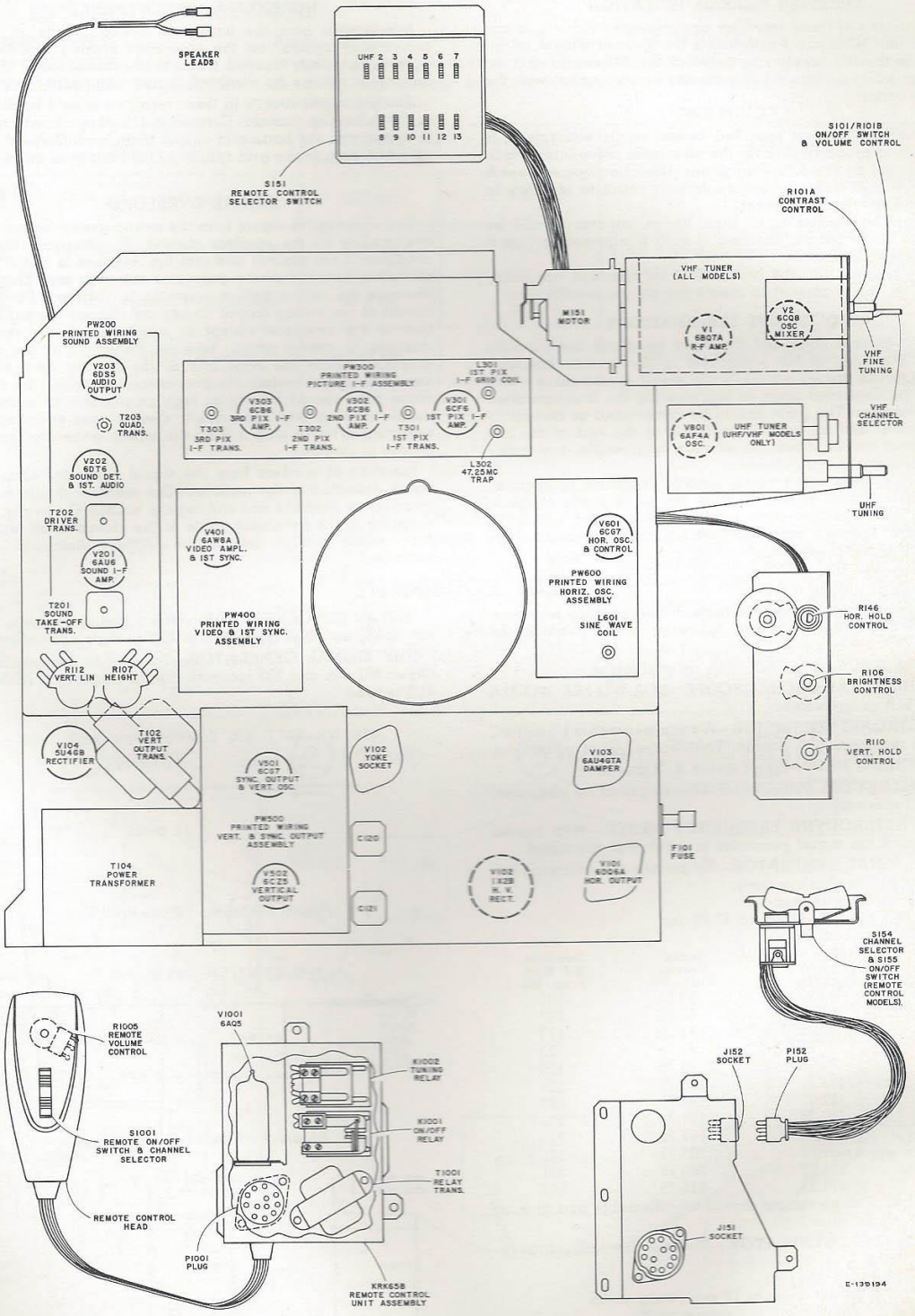

Figure 7—Chassis Front View (Wiring Side)

GENERAL INSTRUCTIONS

RECEIVER CHASSIS ISOLATION

The chassis of these receivers are connected directly to one side of the AC input. An isolation transformer should be inserted in the AC supply line between the AC source and the receiver when performing any service or adjustment with the chassis exposed.

EQUIPMENT

The test equipment specified below, or its equivalent, is essential to properly perform the alignment procedures which are outlined on the following pages. Use of equipment which does not meet these requirements may result in inability to properly align the instrument.

A warm-up period of at least fifteen minutes should be allowed for proper stabilization of such equipment as Signal and Sweep Generators.

It is essential that the bias values as specified are maintained during alignment to insure the proper results.

EQUIPMENT TERMINATIONS

The alignment pads and the input head are designed for correct matching of the equipment to the circuits involved. Failure to use proper matching will result in responses which cannot be depended upon as representing the true operation of the receiver. The pads should be constructed as compactly as possible and all unshielded leads at the end of the test equipment cables should be as short as possible, preferably not in excess of one inch long.

In many instances a small ceramic capacitor of approximately 1000 mmf. connected from the oscilloscope probe to ground will eliminate stray pick-up of unwanted signals. If used, make sure the capacitor does not affect the shape of the response being observed.

HORIZONTAL INTERFERENCE

Interference from the horizontal sweep circuits of the receiver may appear on the responses making it difficult to observe a clearly defined trace. It is recommended that the horizontal circuits be disabled during alignment.

The horizontal circuits in these receivers should be disabled in the following manner. Connect a 150 ohm, 10 watt resistor in series with the horizontal output plate lead. Connect a bias of —12.5 volts to the grid (pin 5) of the horizontal output tube.

SIGNAL OVERLOAD

Use of excessive signal from the sweep generator can cause overloading of the receiver circuits. To determine that this condition is not present and that the response is a true representation, turn the sweep generator output to zero. Gradually increase the output until a response is obtained. Further increase of the sweep output should not change the configuration of the response except in amplitude. If the response changes in configuration, such as flattening at the top or dropping below the base line at the bottom, decrease the sweep output to restore the proper configuration. The oscilloscope gain should be run as high as possible to maintain a usable pattern with the peak-to-peak values specified, thus requiring a lower output from the sweep generator and less chance of overload.

Insertion of markers from the signal generator should not cause distortion of the response. The markers should be kept as small as possible and still remain visible. Generally, loose coupling of the generator cable to the sweep cable will provide ample marker information without distortion of the response.

TEST EQUIPMENT

To properly service the television chassis of these receivers, it is recommended that the following test equipment be available.

BIAS SUPPLY—RCA WG-307A or equivalent.

CATHODE RAY OSCILLOSCOPE—RCA WO-58A, WO-88A or WO-91A or equivalent.

ELECTRONIC VOLTMETER—A voltmeter with a 1.5 volt DC scale is required. RCA Senior "VoltOhmyst" ® or equivalent.

MATCHING PADS—See Figures 8, 9 and 10.

OSCILLOSCOPE PREAMPLIFIER—Required for alignment of UHF Tuner only.

VHF HETERODYNE FREQUENCY METER—With crystal calibrator if the signal generator is not crystal controlled.

VHF SIGNAL GENERATOR—To provide the following frequencies with crystal accuracy:

(a) Intermediate frequencies
4.5 mc., 39.25 mc. to 47.25 mc.

(b) Radio frequencies

Channel Number	Picture Carrier Freq. Mc.	Sound Carrier Freq. Mc.	Receiver R-F Osc. Freq. Mc.
2	55.25	59.75	101
3	61.25	65.75	107
4	67.25	71.75	113
5	77.25	81.75	123
6	83.25	87.75	129
7	175.25	179.75	221
8	181.25	185.75	227
9	187.25	191.75	233
10	193.25	197.75	239
11	199.25	203.75	245
12	205.25	209.75	251
13	211.25	215.75	257

(c) Output of these ranges should be adjustable and at least .1 volt maximum.

VHF SWEEP GENERATOR—Meeting the following requirements:

(a) Frequency ranges
35 to 90 mc., 1 mc. to 12 mc. sweep width
170 to 225 mc., 12 mc. sweep width

(b) Output adjustable with at least .1 volt maximum.

(c) Output constant on all ranges.

(d) "Flat" output on all attenuator positions.

UHF SWEEP GENERATOR—With a frequency range of 470 mc. to 890 mc. RCA types 40A or 41A or their equivalent.

UHF SIGNAL GENERATOR—To provide frequencies between 461 mc. and 931 mc. with crystal accuracy if RCA Type 41A is used.

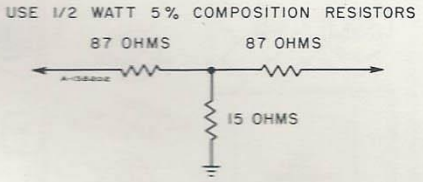

Figure 8—Sound Attenuation Pad

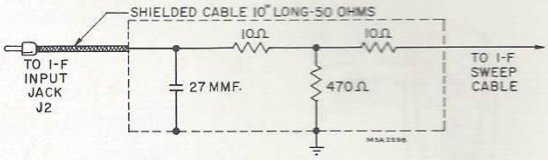

Figure 9—Tuner I-F Input Head

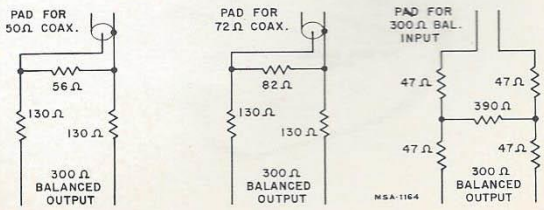

Figure 10—Sweep Attenuator Pads

PICTURE I-F TRANSFORMER AND TRAP ADJUSTMENTS

TEST EQUIPMENT CONNECTIONS:

BIAS SUPPLY ..... Apply —4 volts to I-F AGC bus at terminal "J" of PW300. Ground positive lead to chassis.
SIGNAL GENERATOR ..... Connect to mixer grid at strap on S1B, in series with 1500 mmf. capacitor (see below).
VACUUM TUBE VOLTMETER.... Connect to 2nd Detector output at terminal "A" of PW400 using direct probe. Ground lead connected to chassis.

STEP		SIGNAL GENERATOR	ADJUST	REMARKS
1	Peak 3rd pix. I-F transformer	44.5 mc.	T303	Peak T303, T302 & T301 on frequency for maximum output on meter. Adjust generator output for 3 volts on meter when finally peaked.
2	Peak 2nd pix. I-F transformer	45.5 mc.	T302	
3	Peak 1st pix. I-F transformer	43.0 mc.	T301	
4	Adjust 47.25 mc. traps	47.25 mc.	L302 & T2 (top core)	Minimum output indication on meter.

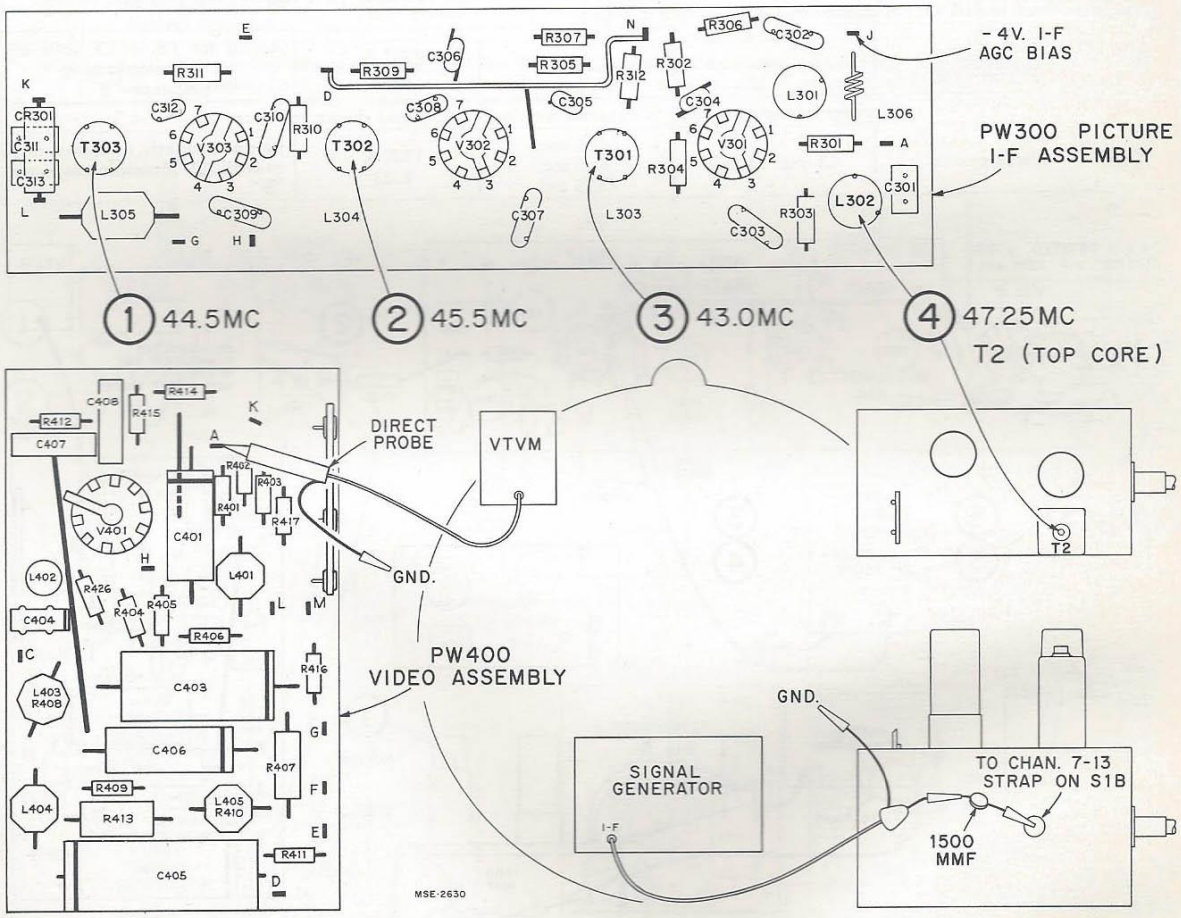

Figure 11—Picture I-F Transformer and Trap Adjustments

SWEEP ALIGNMENT OF PICTURE I-F

TEST EQUIPMENT CONNECTIONS:

BIAS SUPPLY ..... Apply —4 volts to I-F AGC bus at terminal "J" of PW300, and —3.0 volts to tuner AGC terminal.

OSCILLOSCOPE ..... Connect 180 ohm resistor across pins 5 and 6 of V301 1st pix. I-F amplifier. Connect oscilloscope to pin 5 of V301, using diode probe.

SWEEP GENERATOR ..... Connect in series with 1500 mmf. capacitor to strap on S1B at mixer grid. Use shortest leads possible.

SIGNAL GENERATOR ..... Couple loosely to sweep output cable to provide markers.

VACUUM TUBE VOLTMETER.... Connect to 2nd Detector output at terminal "A" of PW400. Use DC probe.

STEP		SWEEP GENERATOR	SIGNAL GENERATOR	ADJUST	REMARKS
Set channel selector to channel 4.					
1	Adjust mixer plate transformer	40 - 50 mc. (I-F)	42.5 mc. 45.75 mc.	T2 (bottom core)	Sweep output set for 0.5 v. P-P on scope. Adjust for max. gain and response "A" below. Max. allow. tilt 20%.
2	Adjust I-F input	40 - 50 mc. (I-F)	42.5 mc. 45.75 mc.	L301 & C102	
Remove 180 ohm resistor and oscilloscope from V301. Connect scope to terminal "A" of PW400 using direct probe.					
3	Retouch I-F transformers	40 - 50 mc. (I-F)	42.5 mc. 45.0 mc. 45.75 mc.	T303 T302 T301	Adjust for response "B". Use 5 v. P-P on scope.
Remove sweep from mixer grid. Couple signal generator to mixer, in series with pad shown in Figure 8. Set generator to 45.75 mc. and adjust output for exactly one and one-half (1½) volts on the "VoltOhmyst". Remove the pad and connect generator direct to S1B. Do not change generator output in step 4.					
4	Set 41.25 mc. attenuation	—	41.25 mc.	T301 & T303	Adjust for 1.0 to 1.5 volts on VTVM maintaining response "B".
5	Connect sweep generator to antenna terminals using pad shown in Figure 10.				
	Check overall	Chans. 13 to 2	42.5 mc. 45.0 mc. 45.75 mc.	T302 & T303	Retouch slightly to correct any overall tilt. Maintain response "B".

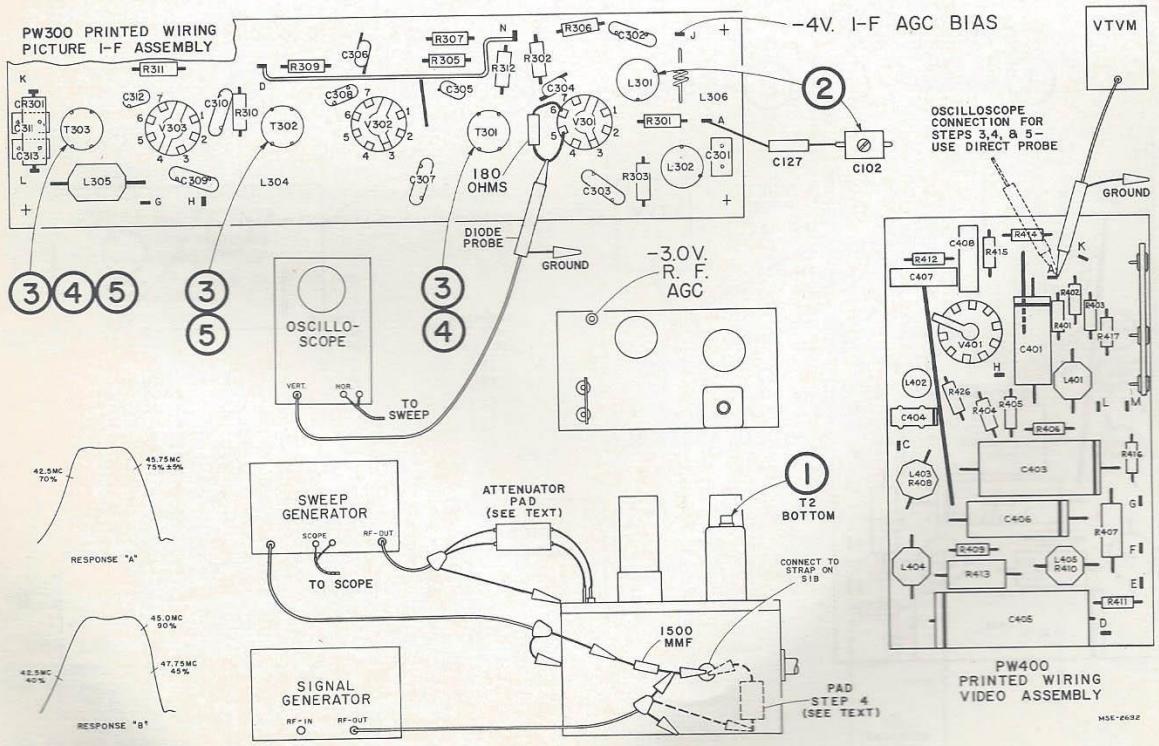

Figure 12—Sweep Alignment from Mixer Grid

TUNER I-F ALIGNMENT — UHF/VHF MODELS ONLY

TEST EQUIPMENT CONNECTIONS:

BIAS SUPPLY ..... Apply —3.0 volts to AGC terminal on tuner. Ground positive lead to tuner case.

OSCILLOSCOPE ..... Connect a 330 mmf. capacitor and a 180 ohm resistor in series from pin 6 of V2 to ground. Connect the capacitor to pin 6 and the resistor to ground. Connect the oscilloscope to the junction of the resistor and capacitor using the diode probe. (See below.)

SWEEP GENERATOR ..... Connect to I-F input jack J2 using the input head shown in Figure 9.

SIGNAL GENERATOR .... Couple loosely to the sweep output cable to provide markers.

STEP		SWEEP GENERATOR	SIGNAL GENERATOR	ADJUST	REMARKS
Set channel selector to UHF position between channels 2 and 13.					
1	Adjust I-F input coil	40 - 50 mc. (I-F)	41.25 mc. 45.75 mc.	L56	L56 for max. gain and response "A". Generator set for 0.5 v. P-P or less on scope.
2	Adjust I-F interstage coil	40 - 50 mc. (I-F)	41.25 mc. 45.75 mc.	L53	Adjust L53 for response "A" in conjunction with L56 in step 1 above.
Connect UHF sweep generator to UHF terminals. Couple VHF signal generator to grid of 1st picture I-F amplifier as shown below. Remove input head from J2 and reconnect the cable from the UHF tuner to J2. Connect the oscilloscope to the 2nd detector output at terminal "A" of PW400 using the direct probe. Use 5 volts p-p on oscilloscope.					
3	Retouch I-F input and interstage coils for overall response	Tune entire UHF range	42.5 mc. 45.0 mc. 45.75 mc.	L53 & L56	Retouch L53 & L56 for response "B".
NOTE:—Adjustment of L56 affects the setting of the VHF oscillators. The oscillator adjustments will require resetting after L56 is adjusted. Do not retouch any other I-F adjustments when checking overall response at UHF.					

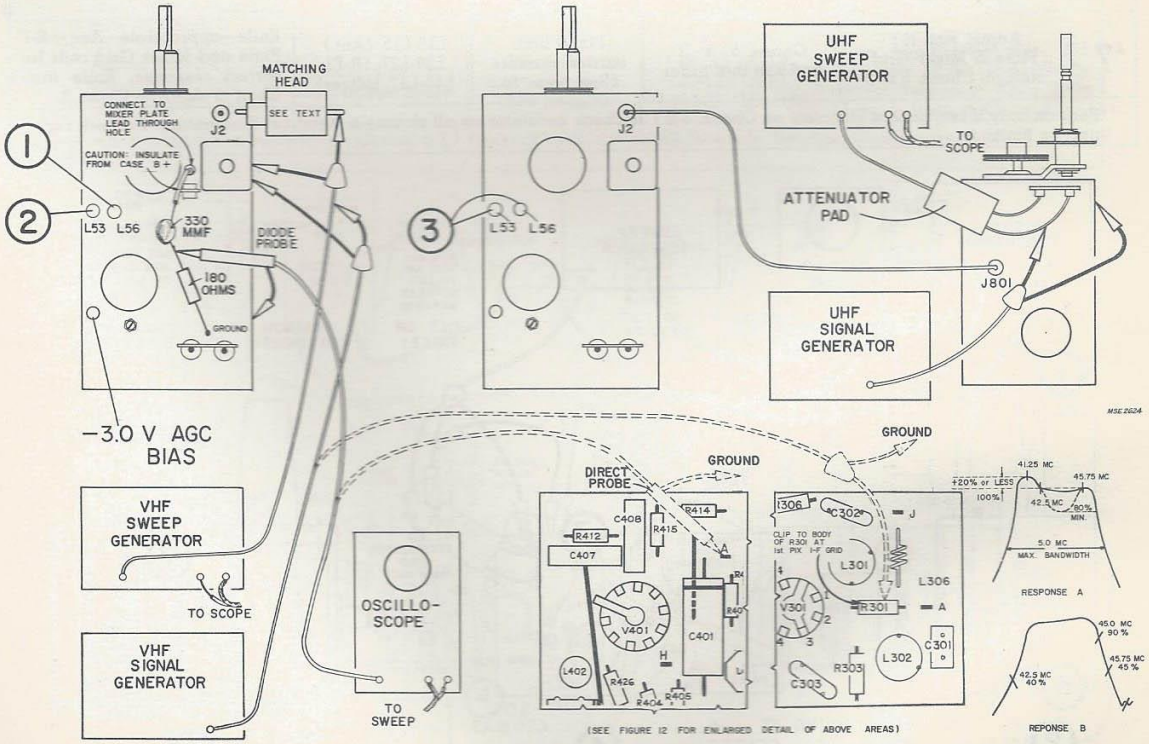

Figure 13—Tuner I-F Alignment (UHF/VHF Models Only)

KRK46C OR KRK46F VHF TUNER R-F ALIGNMENT

TEST EQUIPMENT CONNECTIONS:

BIAS SUPPLY ..... Apply —3.0 volts to AGC terminal on tuner. Ground positive lead to tuner case.
OSCILLOSCOPE ..... Connect to test point TP1 using diode probe. Set scope to maximum gain.
SWEEP GENERATOR ..... Connect to antenna terminals through pad shown in Figure 10.
SIGNAL GENERATOR ..... Couple R-F output cable loosely to sweep cable to provide markers. Insert insulated wire into top of Osc./Mixer tube shield. Connect other end to "R-F IN" terminals of generator.
VACUUM TUBE VOLTMETER.... Connect to test point TP1 (see below).
MISCELLANEOUS ..... Disconnect link cable from I-F output jack J1. Connect a 39 ohm resistor across J1 (see below). Set fine tuning at mechanical center of range.

STEP		SWEEP GENERATOR	SIGNAL GENERATOR	ADJUST	REMARKS
Channel selector to be set at channel being aligned in each step outlined below.					
1	Adjust osc. Chan. 13	—	257 mc.	L9	Adjust for beat with Sig. Gen.
2	Adjust osc. Chan. 12 downward to Chan. 2	—	Osc. Freq. for Chan. involved (See page 8)	L47-L42 L52-L48	Adjust for beat with Sig. Gen. from Chan. 12 down to Chan. 2.
3	Adjust Ant.-R-F Plate-Mixer Grid and Bandwidth on Chan. 8	Chan. 8	181.25 mc. 185.75 mc.	C7, C12, C14 & C31	Adjust C31 (Ampl.), C7 (Freq.) and C14 (Tilt) for response below. Adjust C12 for bandwidth.
4	Adjust Chan. 13 coils and bandwidth	Chan. 13	211.25 mc. 215.75 mc.	L7, L8 & C12	Adjust L7 (Freq.) and L8 (Tilt) for proper response. Retouch C12 for bandwidth.
Repeat Chan. 8 and 13 adjustments for proper tracking and response on all channels from 13 to 7. Repeat step 1. Turn off generators and check osc. injection voltage (—2.5 to —5.5) on meter. Replace V2 if outside limits and repeat steps 1 to 4.					
5	Adjust osc. Chan. 6	Chan. 6	129 mc.	L52	Adjust for beat with Sig. Gen.
6	Adjust Ant.-R-F Plate & Mixer Grid coils on Chan. 6	Chan. 6	83.25 mc. 87.75 mc.	L19, L20 & L41	Adjust L19 (Ampl.), L20 (Freq.) and L41 (Tilt) for response below.
*7	Adjust Ant.-R-F Plate & Mixer Grid coils on Chans. 5 to 2	Chans. 5 - 4 - 3 and 2 in that order	Pix. & Snd. carrier markers (See page 8)	L18-L15 (Ant.) L30-L27 (R-F) L40-L37 (Mixer)	Knife appropriate Ant., R-F Plate and Mixer Grid coils for correct response. Knife from Chan. 5 down to Chan. 2.
*(Perform only if response is incorrect on Chans. 5-2.) Recheck oscillator on all channels. Readjust if necessary. Recheck osc. injection limits.					

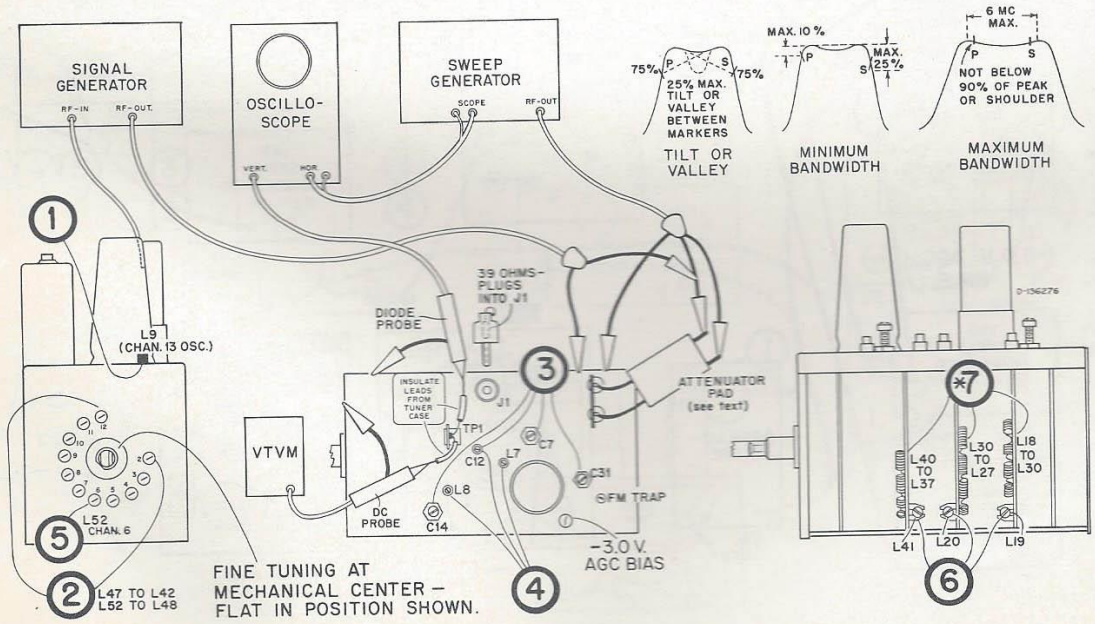

Figure 14—KRK46C or KRK46F VHF Tuner R-F Alignment

KRK47C VHF TUNER R-F ALIGNMENT

TEST EQUIPMENT CONNECTIONS:

BIAS SUPPLY ..... Apply —3.0 volts to AGC terminal on tuner. Ground positive lead to tuner case.
OSCILLOSCOPE ..... Connect to test point TP1 using diode probe. Set scope to maximuum gain.
SWEEP GENERATOR ..... Connect to antenna terminals through pad shown in Figure 10.
SIGNAL GENERATOR ..... Couple R-F output cable loosely to sweep cable to provide markers. Insert insulated wire into top of Osc./Mixer tube shield. Connect other end to "R-F IN" terminals of generator.
VACUUM TUBE VOLTMETER.... Connect to test point TP1 (see below).
MISCELLANEOUS ..... Disconnect link cable from I-F output jack J1. Connect a 39 ohm resistor across J1 (see below). Set fine tuning at mechanical center of range. Insert head shown in Figure 9 into I-F input jack J2.

STEP		SWEEP GENERATOR	SIGNAL GENERATOR	ADJUST	REMARKS
Channel selector to be set at channel being aligned in each step outlined below.					
1	Adjust osc. Chan. 13	—	257 mc.	L9	Adjust for beat with Sig. Gen.
2	Adjust osc. Chan. 12 downward to Chan. 2	—	Osc. Freq. for Chan. involved (See page 8)	L47-L42 L52-L48	Adjust for beat with Sig. Gen. from Chan. 12 down to Chan. 2.
3	Adjust Ant.-R-F Plate-Mixer Grid and Bandwidth on Chan. 8	Chan. 8	181.25 mc. 185.75 mc.	C7, C12, C14 & C31	Adjust C31 (Ampl.), C7 (Freq.) and C14 (Tilt) for response below. Adjust C12 for bandwidth.
4	Adjust Chan. 13 coils and bandwidth	Chan. 13	211.25 mc. 215.75 mc.	L7, L8 & C12	Adjust L7 (Freq.) and L8 (Tilt) for proper response. Retouch C12 for bandwidth.
Repeat Chan. 8 and 13 adjustments for proper tracking and response on all channels from 13 to 7. Repeat step 1. Turn off generators and check osc. injection voltage (—2.0 to —5.5) on meter. Replace V2 if outside limits and repeat steps 1 to 4.					
5	Adjust osc. Chan. 6	Chan. 6	129 mc.	L52	Adjust for beat with Sig. Gen.
6	Adjust Ant.-R-F Plate & Mixer Grid coils on Chan. 6	Chan. 6	83.25 mc. 87.75 mc.	L19, L20 and L41	Adjust L19 (Ampl.), L20 (Freq.) and L41 (Tilt) for response below.
*7	Adjust Ant.-R-F Plate & Mixer Grid coils on Chans. 5 to 2	Chans. 5 - 4 - 3 and 2 in that order	Pix. & Snd. carrier markers (See page 8)	L18-L15 (Ant.) L30-L27 (R-F) L40-L37 (Mixer)	Knife appropriate Ant., R-F Plate and Mixer Grid coils for correct response. Knife from Chan. 5 down to Chan. 2.
*(Perform only if response is incorrect on Chans. 5-2.) Recheck oscillator on all channels. Readjust if necessary. Recheck osc. injection limits.					

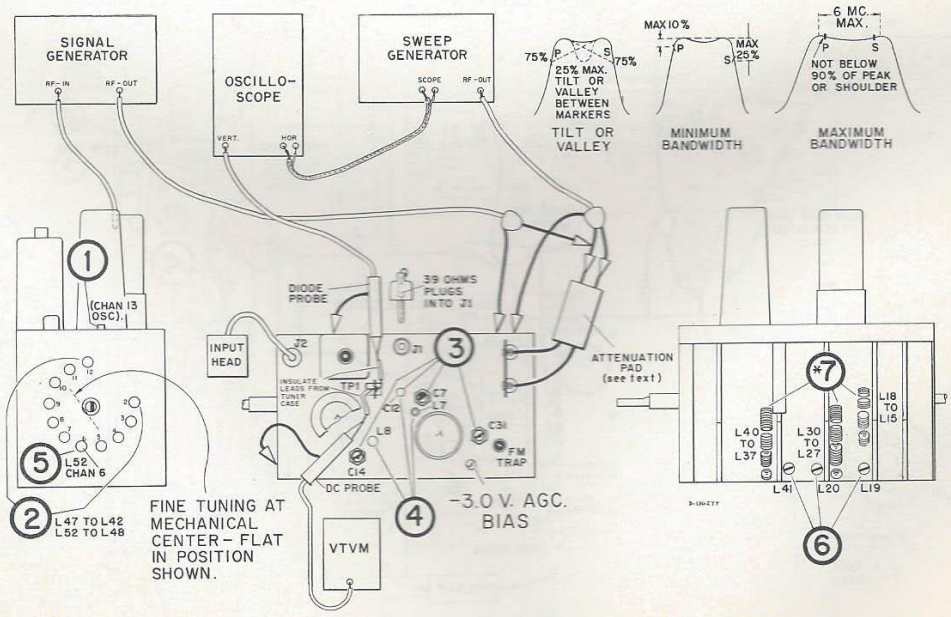

Figure 15—KRK47C VHF Tuner R-F Alignment

KRK64A UHF TUNER ALIGNMENT

TEST EQUIPMENT CONNECTIONS:

MILLIAMMETER ..... Disconnect B+ lead and insert 0-15 ma. meter in series with B+ lead.
OSCILLOSCOPE ..... Connect using preamplifier to center conductor of J801 at 100 ohm resistor (see below).
VACUUM TUBE VOLTMETER.... Connect to center conductor of J801.
VHF SIGNAL GENERATOR..... Connect in series with 1000 ohms to center conductor of J801.
UHF SWEEP GENERATOR..... Connect to antenna terminals using 300 ohm pad supplied with generator. Set for full sweep width.
UHF SIGNAL GENERATOR..... Couple loosely to sweep cable if sweep does not have internal markers.
MISCELLANEOUS ..... Connect 100 ohm resistor from center conductor of J801 to ground (see below). Fashion a test dial to fit over split gear on tuner gang. Mark 0°, 5° and 164° on test dial. (*NOTE:*—Tuners marked KRK64A-M1, with a dab of red or orange paint on face of tuning shaft require test dial marked at 0°, 6° and 163°—see reference below.) Establish 0° with tuner gang shaft fully clockwise with gang fully meshed.

STEP		UHF SWEEP & SIGNAL GENERATOR	VHF SIGNAL GENERATOR	ADJUST
1	Adjust R-F tabs at high freq. end	887.5 mc. center freq. Chan. 83	41.25 mc. 43.5 mc. 45.75 mc.	Gang at 164° point (163° see above). Knife C801 and C803 for response "A" centered at 887.5 mc.
2	Adjust osc. trimmer at high freq. end	887.5 mc. center freq. Chan. 83	43.5 mc.	Adjust C809 so 43.5 mc. marker and 887.5 mc. marker coincide. See response "A".
3	Adjust osc. trimmer at low freq. end	473.5 mc. center freq. Chan. 14	43.5 mc.	Gang at 5° point (6° see above). Adjust C810 so 43.5 mc. marker and 473.5 mc. marker coincide. See response "B".
Repeat steps 1, 2 and 3 for proper response. Tune entire range from high freq. to low freq. range checking response to be within limits. Mistracking to the extent that carriers fall no lower than 70% down the sides of response is permissible. If tracking is outside limits proceed with step 4.				
4	Knife R-F plates from high to low end	Downward from high to low end for chan. observed	41.25 mc. 43.5 mc. 45.75 mc.	Knife segments of C802 and C804 from high to low end. Knife equally on each side at point closest to mesh with stator. Do not reknife preceding section. Always knife going lower in freq.
5	Tune entire range and observe reading on VTVM. A reading between .05 and .4 volts should be obtained with 130 volts at B+ terminal. Reposition osc. flag L806 to bring within proper range. If unobtainable replace crystal CR801 or V801, and repeat entire procedure for new tube or crystal. Observe current reading on milliammeter. Should read between 8 and 10.5 ma. If not replace V801 and realign with new tube.			

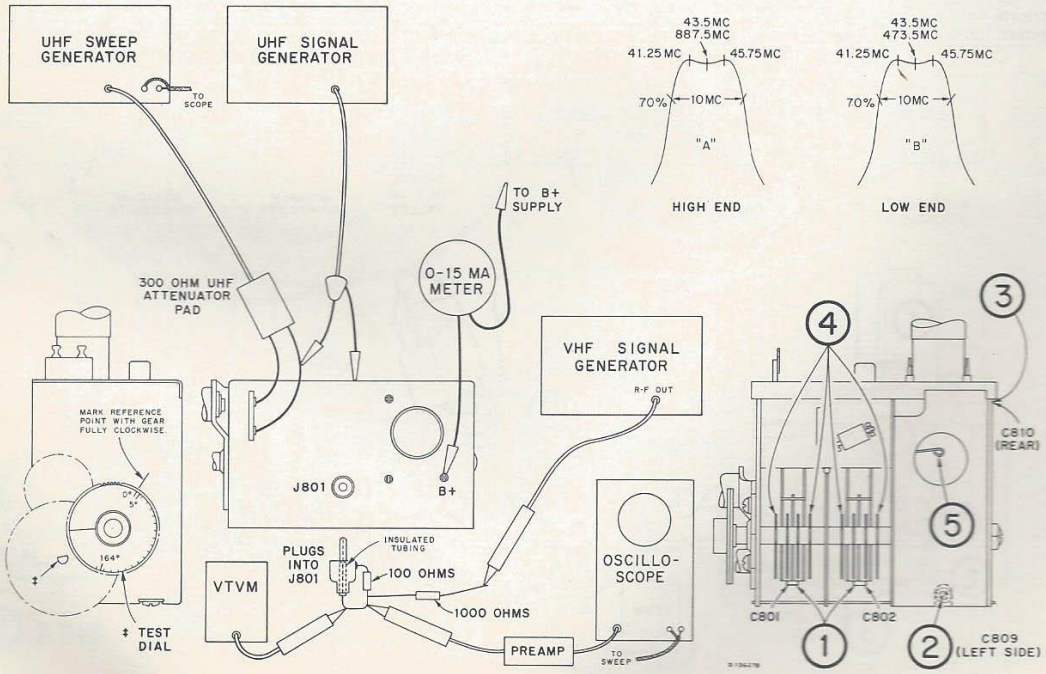

Figure 16—KRK64A UHF Tuner Alignment

SOUND I-F, SOUND DETECTOR AND 4.5 MC TRAP ALIGNMENT

TEST EQUIPMENT CONNECTIONS:

BIAS SUPPLY ..... Apply —10 volts to the I-F AGC bus at terminal "J" on PW300.
OSCILLOSCOPE ..... Connect across speaker voice coil.
SIGNAL GENERATOR ..... Connect to terminal "A" on PW400.
VACUUM TUBE VOLTMETER.... Connect to output of diode detector shown below. Set meter for negative voltage readings.
MISCELLANEOUS ..... Connect test diode detector as shown below.

STEP		SIGNAL GENERATOR	ADJUST	REMARKS
Set contrast control maximum clockwise.				
1	Adjust Driver Transformer Primary and Secondary	4.5 mc.	T202 (top & bottom)	Adjust T202 top & bottom for maximum negative DC on meter. Set generator for 1.0 to 1.5 volts on meter when finally peaked. Peak cores at open end of coils (maximum core separation).
2	Adjust Sound Take-Off Trans.	4.5 mc.	T201	Adjust T201 for maximum negative DC on meter. Set generator for 1.0 to 1.5 volts on meter.
3	Disconnect the diode test detector. Turn off signal generator and tune in strongest signal in area adjusting volume control for normal volume (approx. ¼ turn from c.c.w.). Turn core of T203 flush with top of coil form.			
4	Adjust Sound Detector Trans.	Observing oscilloscope and listening to audio output adjust T203 clockwise to a peak. Continue clockwise to a second louder peak and adjust T203 for maximum on this second peak.		
5	Adjust 4.5 mc. trap	4.5 mc., A-M Mod., 400 Cycles	L402	Adjust for minimum 400 cycle indication on oscilloscope.
Alternate Method Using Generators With F-M Modulation Provided.				
1	Same as step 1 above. Modulate 4.5 mc. signal with F-M 400 cycle signal with 7½ kc. deviation.			
2	Same as step 2 above. Modulate 4.5 mc. signal with F-M 400 cycle signal with 7½ kc. deviation.			
3	Adjust Sound Detector Trans.	4.5 mc., 400 cycle F-M Mod., 7½ kc. Dev.	T203	Adjust T203 for max. 400 cycle output on scope using max. amplitude peak. Adjust volume control for .70 v. p-p on scope when peaked. See response below.
4	Retouch Driver and Sound Take-Off. Trans. for breakout	4.5 mc., 400 cycle F-M Mod., 7½ kc. Dev.	T201 & T202	Decrease input signal to minimum usable signal and retouch T201 & T202 for symmetrical breakout. Response below.
Move the oscilloscope to terminal "D" on PW400. Use the diode probe. Set the contrast control to maximum clockwise position.				
5	Adjust 4.5 mc. trap	Same as step 5 above. Adjust for minimum 400 cycle indication on oscilloscope.		

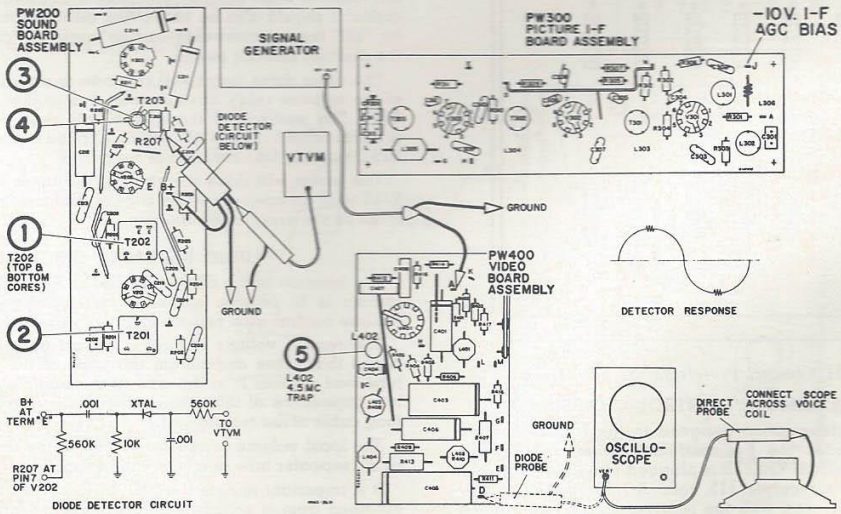

Figure 17—Sound I-F, Sound Detector and 4.5 mc. Trap Alignment

HORIZONTAL OSCILLATOR AND OUTPUT ALIGNMENT

The proper setting of the width and drive adjustments should be made before making adjustment of the sine wave coil L601.

Place a jumper across the terminals of the sine wave coil L601 and adjust the horizontal hold control until the picture pulls into sync. Remove the short across the sine wave coil.

Connect the low capacity probe of an oscilloscope to terminal "F" of PW600. Turn the horizontal hold control clockwise until the picture falls out of sync, then counter-clockwise until the picture just pulls into sync. The pattern on the oscilloscope should be as shown in Figure 18C. Adjust the sine wave adjustment core L601 until the two peaks are at the same height. During this adjustment, the picture must be kept in sync by readjusting the horizontal hold control if necessary.

Remove the oscilloscope upon completion of this adjustment.

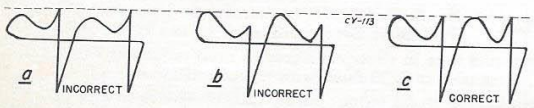

Figure 18—Horizontal Oscillator Waveforms

Horizontal Drive Adjustment.—Turn the horizontal hold control until the picture falls out of sync with the diagonal lines sloping down to the left. Slowly turn the horizontal control counter-clockwise and note the number of diagonal bars obtained just before the picture pulls into sync.

Pull-in should occur with one and one-half to three bars present.

Set the width control fully counter-clockwise.

With the horizontal control set at the pull-in point, adjust the horizontal drive trimmer C109 counter-clockwise for a bright vertical line in the center of the picture. Turn the trimmer clockwise until the line just disappears. If no line appears set the drive trimmer fully counter-clockwise.

Set the brightness control to normal and adjust the width control so the picture overscans the mask ¾" at each side with normal line voltage (117V. AC). Readjust the horizontal drive trimmer as above.

The picture should pull into sync with one and one-half to three bars present, remain in sync for approximately one-quarter of a turn, and fall out of sync with between 2 and 5 bars present before interrupted oscillation (motorboating) occurs.

REMOTE CONTROL FUNCTION

SELECTOR SWITCH OPERATION

Models with remote control will automatically select channels when the channel selector switch is pressed. The channels selected are determined by the setting of the slide switches on the back of the receiver. Refer to Figure 19. To provide automatic selection of the channels in a particular location, slide the switches to uncover the numbers of the channels to be received. The numbers on all other switch positions should be covered.

The channel selector switch on top of the receiver or on the remote control unit should be pressed just long enough to start the channel selector motor. After the motor has been started it will continue to run until the next preselected channel is reached.

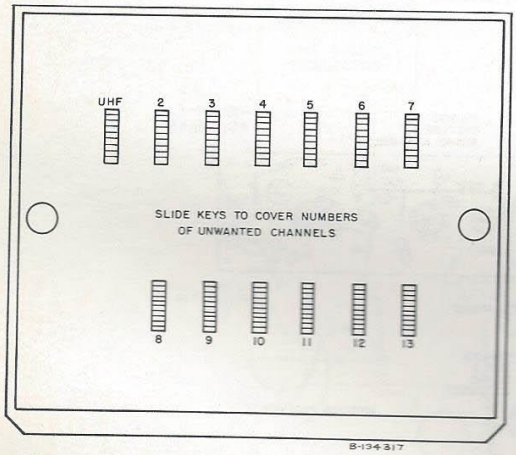

Figure 19—S151 Channel Preselector Switch Assembly

KRK65B REMOTE CONTROL CHASSIS

KRK65B is the designation assigned to the remote control chassis and includes the five-conductor cable and remote switch assembly. When KRK65B is plugged into the receptacle on the back of the receiver 115 volts AC is applied to the 12-volt transformer even with the receiver "turned off." Refer to Figure 27. This makes it possible to energize the 12-volt relays with the "on-off" or channel selector switch.

If necessary, the receiver may be operated with the remote unit unplugged. To do this, another plug (P151) similar to the plug on the remote chassis is prepared with two jumpers as shown in Figure 27. When the plug is connected to receptacle J151 normal operation of the receiver is obtained.

"ON-OFF" Function.—When the "on-off" switch (local or remote) is pressed, the "on-off" relay is energized and closes the switch that applies AC to the primary of the power transformer in the main chassis. The "on-off" relay is of the mechanical latching type and the switch remains in the closed position although the relay is no longer energized. When the "on-off" button is again pressed the relay is energized again, the switch opens, and the receiver is turned off.

CHANNEL SELECTOR FUNCTION.—The function of the channel selector switch on the remote switch assembly or on top of the receiver is to apply 115 volts AC to the drive motor for the VHF tuner. The remote switch accomplishes this by momentarily closing the contacts of the channel selector relay. *However, the contacts of the "on-off" relay must also be closed to complete the circuit for operation of the motor.* Therefore, the receiver must be "on" before selection of channels can be made. It should also be noted that although the receiver may be "off" the selector relay can be made to "click" by closing the channel selector switch.

The tuner drive motor will continue to run after the contacts of the selector relay have opened due to the action of switch S153. The contacts of this switch will close when the motor is started and 115 volts AC will be applied to the motor through S153 instead of the contacts of the relays.

The motor will drive the shaft of the tuner and turn switch S152 until an open circuit on S151 is contacted. The motor then stops on the preselected channel.

AUDIO REPEATER CIRCUIT

The function of the 6AQ5 tube in the KRK65B remote control chassis is to provide a means for utilizing a conventional volume control at a remote location without hum pick-up.

The remote volume control is a part of a low impedance circuit that takes audio from the plate of the audio repeater tube and applies it to the grid of the audio output tube. The low impedance of this circuit prevents stray pick-up from the long cable of the remote unit.

The local volume control is located in the grid circuit of the audio repeater tube in a conventional circuit.

It is important to note that the full range of audio cannot be obtained from a volume control unless the unused control is first set to the maximum volume position.

A muting switch is provided on the channel selector relay to silence the speaker when the channel selector button is pressed.

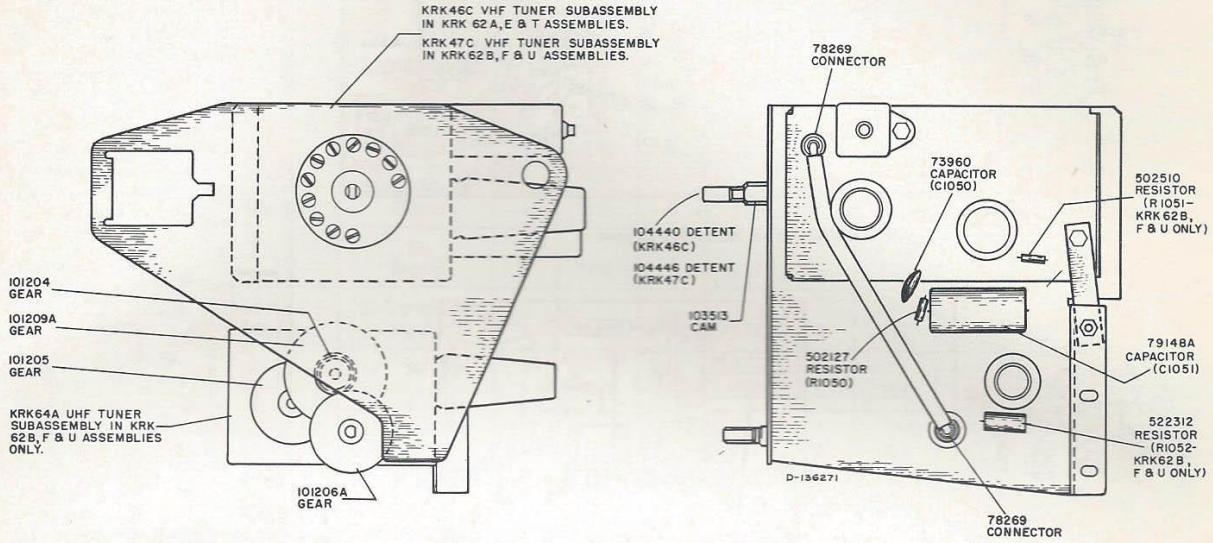

Figure 20—KRK62A, B, E, F, T, U
Tuner Parts Identification

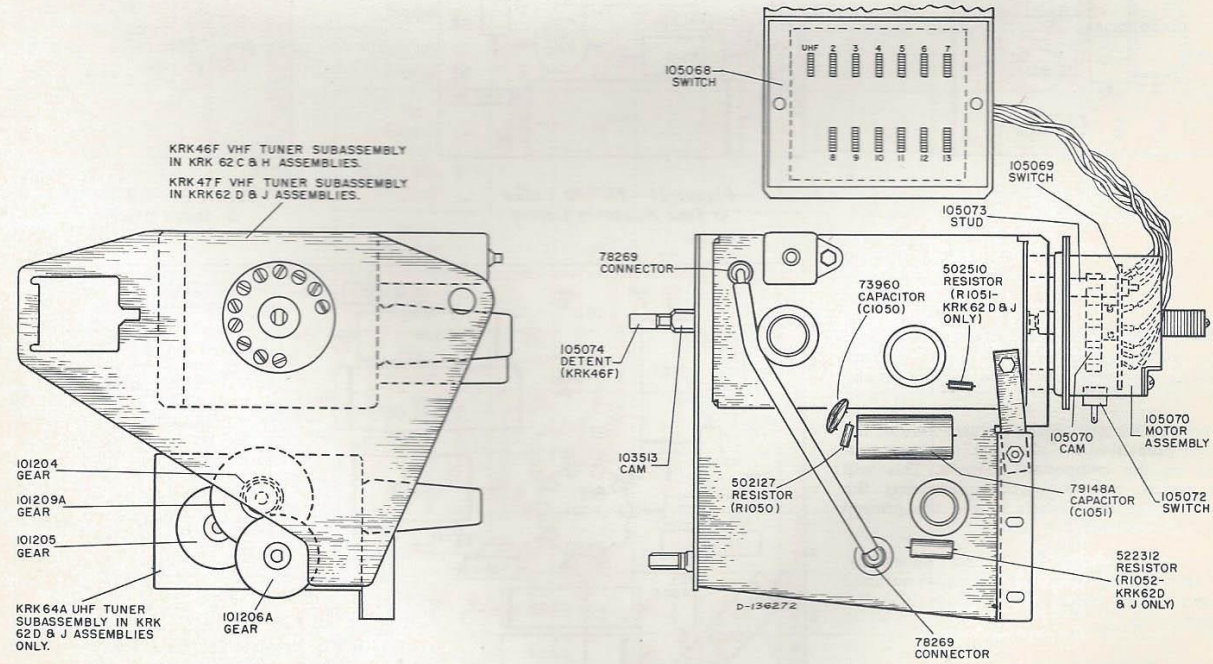

Figure 21—KRK62C & D
Tuner Parts Identification

VOLTAGE CHART

The following measurements represent two sets of conditions. In the first condition, a 30,000 microvolt test pattern signal was fed into the receiver, the picture synchronized and the AGC control properly adjusted. The second condition was obtained by removing the antenna leads and short circuiting the receiver antenna terminals. Voltages shown are read with a type WV97A senior "VoltOhmyst" between the indicated terminal and chassis ground and with the receiver operating on 117 volts, 60 cycles, a-c and should hold within ±20%.

Tube No.	Tube Type	Function	Operating Condition	E. Plate		E. Screen		E. Cathode		E. Grid		Notes on Measurements
				Pin No.	Volts	Pin No.	Volts	Pin No.	Volts	Pin No.	Volts	
V1 KRK46C KRK46F or KRK47C	6BQ7A	R-F Amplifier	30,000 Mu. V. Signal	6	140	—	—	8	0.1	7	—3.7	
			No Signal	6	120	—	—	8	1.1	7	0	
		R-F Amplifier	30,000 Mu. V. Signal	1	248	—	—	3	140	2	—	
			No Signal	1	235	—	—	3	120	2	—	
V2 KRK46C KRK46F or KRK47C	6CQ8	Mixer	30,000 Mu. V. Signal	6	135	3	135	7	0	2	—2.5 to —5.5 (46)	—1.5 to —4.75 (47)
			No Signal	6	122	3	122	7	0	2	—2.5 to —5.5 (46)	
		R-F Oscillator	30,000 Mu. V. Signal	1	248	—	—	8	140	9	128 to 135	
			No Signal	1	248	—	—	8	135	9	123 to 128	
V101	6DQ6A	Horizontal Output	30,000 Mu. V. Signal	Cap	†125	4	185	8	13.0	5	—22	†High Voltage Pulse Present (40 Megs. in series with VTVM)
			No Signal	Cap	†118	4	181	8	12.6	5	—21	
V102	1X2B	H. V. Rectifier	30,000 Mu. V. Signal	Cap	†	—	—	1 & 2	15,000	—	—	†High Voltage Pulse Present
			No Signal	Cap	†	—	—	1 & 2	14,200	—	—	
V103	6AU4-GTA	Damper	30,000 Mu. V. Signal	5	260	—	—	3	†125	—	—	†High Voltage Pulse Present (40 Megs. in series with VTVM)
			No Signal	5	252	—	—	3	†118	—	—	
V104	5U4GB	Rectifier	30,000 Mu. V. Signal	4 & 6	—	—	—	2 & 8	272	—	—	
			No Signal	4 & 6	—	—	—	2 & 8	266	—	—	
V105	21CEP4	Kinescope	30,000 Mu. V. Signal	Anode	15,000	3	550	7	90	2	0	At average Brightness
			No Signal	Anode	14,200	3	520	7	40	2	0	
V201	6AU6	Sound I-F Amp.	30,000 Mu. V. Signal	5	*143	6	104	7	0.3	1	*—5.0	*Measured with 1 Megohm, ½ watt resistor in series with probe
			No Signal	5	*121	6	118	7	0.8	1	*0	
V202	6DT6	Sound Detector & 1st Audio Amp.	30,000 Mu. V. Signal	5	*320	6	106	2	4.2	1 7	*5.0 *—3.5	*Measured with 1 Megohm, ½ watt resistor in series with probe
			No Signal	5	*215	6	121	2	2.9	1 7	*0 * *—5.0	

Tube No.	Tube Type	Function	Operating Condition	E. Plate		E. Screen		E. Cathode		E. Grid		Notes on Measurements
				Pin No.	Volts	Pin No.	Volts	Pin No.	Volts	Pin No.	Volts	
V203	6DS5	Audio Output	30,000 Mu. V. Signal	5	195	6	204	2	8.5	1-7	0	At min. volume
			No Signal	5	187	6	197	2	8.2	1-7	0	
V301	6CF6	1st Pix. I-F Amplifier	30,000 Mu. V. Signal	5	*135	6	148	2	0.1	1	*—4.0	*Measured with 1 Megohm, ½ watt resistor in series with probe
			No Signal	5	*106	6	114	2	0.75	1	*0	
V302	6CB6	2nd Pix. I-F Amplifier	30,000 Mu. V. Signal	5	*240	6	259	2	1.45	1	*130	
			No Signal	5	*228	6	245	2	1.25	1	*114	
V303	6CB6	3rd Pix. I-F Amplifier	30,000 Mu. V. Signal	5	*142	6	152	2	2.1	1	*0	
			No Signal	5	*124	6	135	2	1.8	1	*0	
CR301	—	2nd Det.	30,000 Mu. V. Signal	L	—4.1	—	—	1C	*0	—	—	
			No Signal	L	—0.2	—	—	1C	*0	—	—	
V401A	6AW8A	Video Amp.	30,000 Mu. V. Signal	9	177	8	80	6	111.0	7	8.9	
			No Signal	9	160	8	69	6	0	7	—0.49	
V401B	6AW8A	1st Sync.	30,000 Mu. V. Signal	3	77	—	—	1	0	2	—59	
			No Signal	3	79	—	—	1	0	2	—2.4	
V501A	6CG7	Sync. Output	30,000 Mu. V. Signal	1	63	—	—	3	0	2	—3.4	
			No Signal	1	61	—	—	3	0	2	—1.28	
V501B	6CG7	Vert. Osc.	30,000 Mu. V. Signal	6	185	—	—	8	0	7	—73	
			No Signal	6	164	—	—	8	0	7	—76	
V502	6CZ5	Vertical Output	30,000 Mu. V. Signal	9	235	1	253	7	0	3-6	—25	
			No Signal	9	230	1	245	7	0	3-6	—23	
V601	6CG7	Horizontal Osc. Control	30,000 Mu. V. Signal	1	260	—	—	3	3.15	2	—25	
			No Signal	1	252	—	—	3	5.5	2	—21.5	
		Horizontal Oscillator	30,000 Mu. V. Signal	6	192	—	—	8	0	7	—80	
			No Signal	6	187	—	—	8	0	7	—78	

PRINTED WIRING ASSEMBLIES

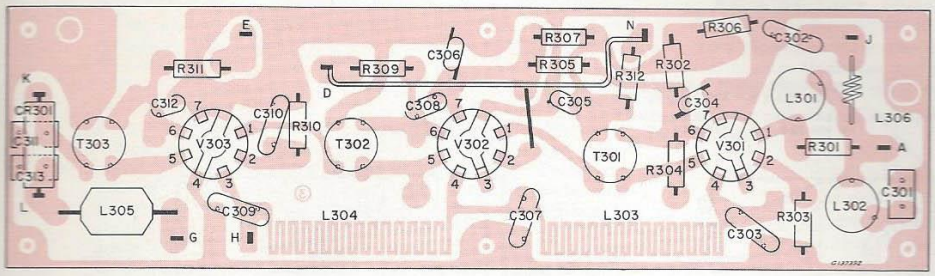

Figure 22—PW300 Picture I-F Assembly Layout

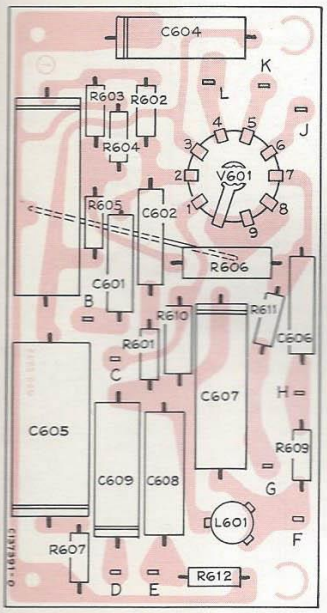

Figure 23—PW600 Horizontal Oscillator Assembly Layout

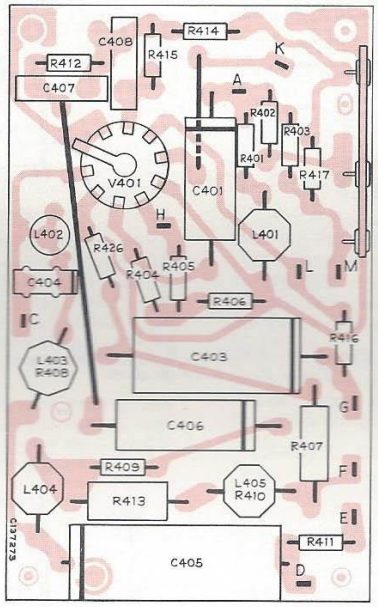

Figure 24—PW400 Video & Sync Assembly Layout

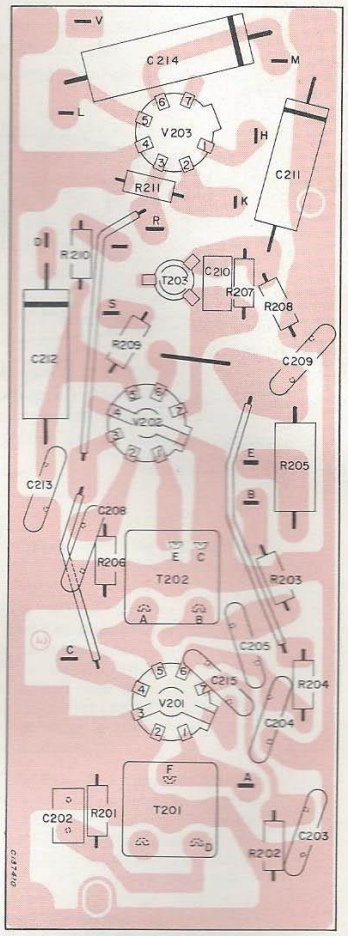

Figure 25—PW200 Sound I-F & Audio Assembly Layout

The assemblies represented above are viewed from the component side of the boards and are oriented as they will usually be viewed on the chassis.

The printed wiring, on the reverse side of the boards, is presented in "phantom" views superimposed on the component layouts. This will enable circuit tracing without removing the assemblies from the chassis to see the printed wiring on the reverse side.

Component replacement, when necessary, should be made following the techniques outlined in Printed Circuit Board Service Data 1955 No. T13 dated 11/15/55.

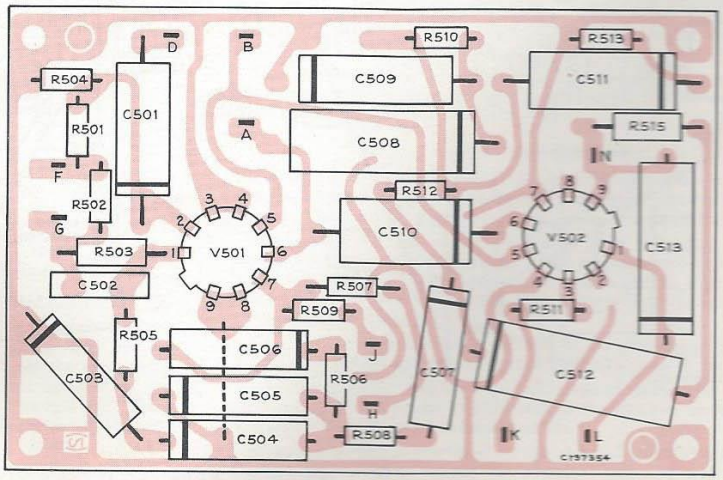

Figure 26—PW500 Vertical & Sync Assembly Layout

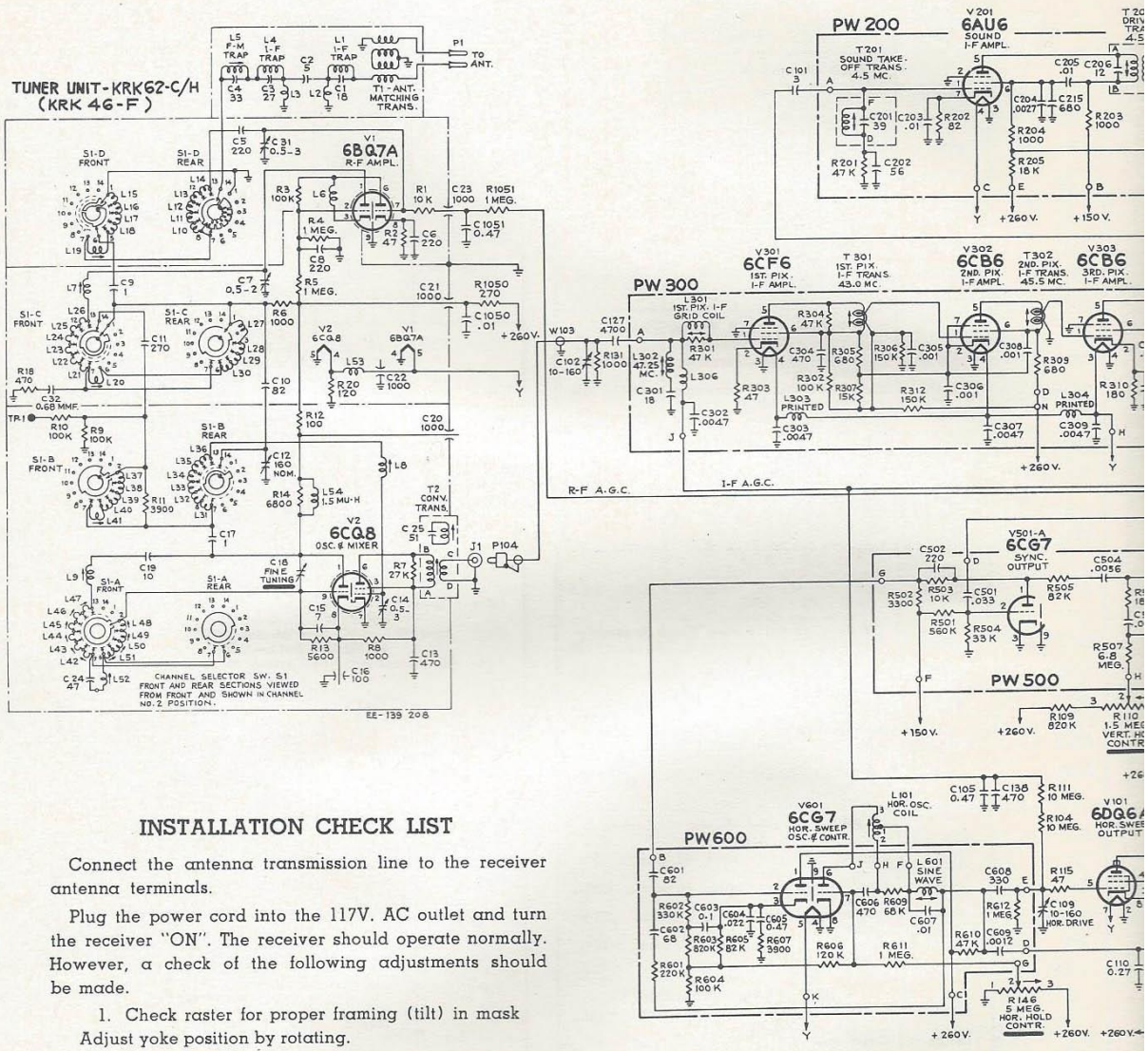

INSTALLATION CHECK LIST

Connect the antenna transmission line to the receiver antenna terminals.

Plug the power cord into the 117V. AC outlet and turn the receiver "ON". The receiver should operate normally. However, a check of the following adjustments should be made.

1. Check raster for proper framing (tilt) in mask Adjust yoke position by rotating.
2. Check width and horizontal linearity, readjust width and drive controls as outlined below, if adjustment is necessary.
3. Check for normal operation of horizontal hold control. Should hold sync for one-quarter of a turn of the control.
4. Check centering of picture. Adjustment is made with the centering lever on the yoke.
5. Check height and vertical linearity, reset controls where required for 5/8" overscan.
6. Check R-F oscillator adjustment on all channels. Readjust if necessary, starting at the highest frequency channel, proceeding to the lowest. Do not adjust the UHF oscillator in the field.

The schematic is shown in the latest condition at the time of printing.
All resistance value in ohms. K = 1000.

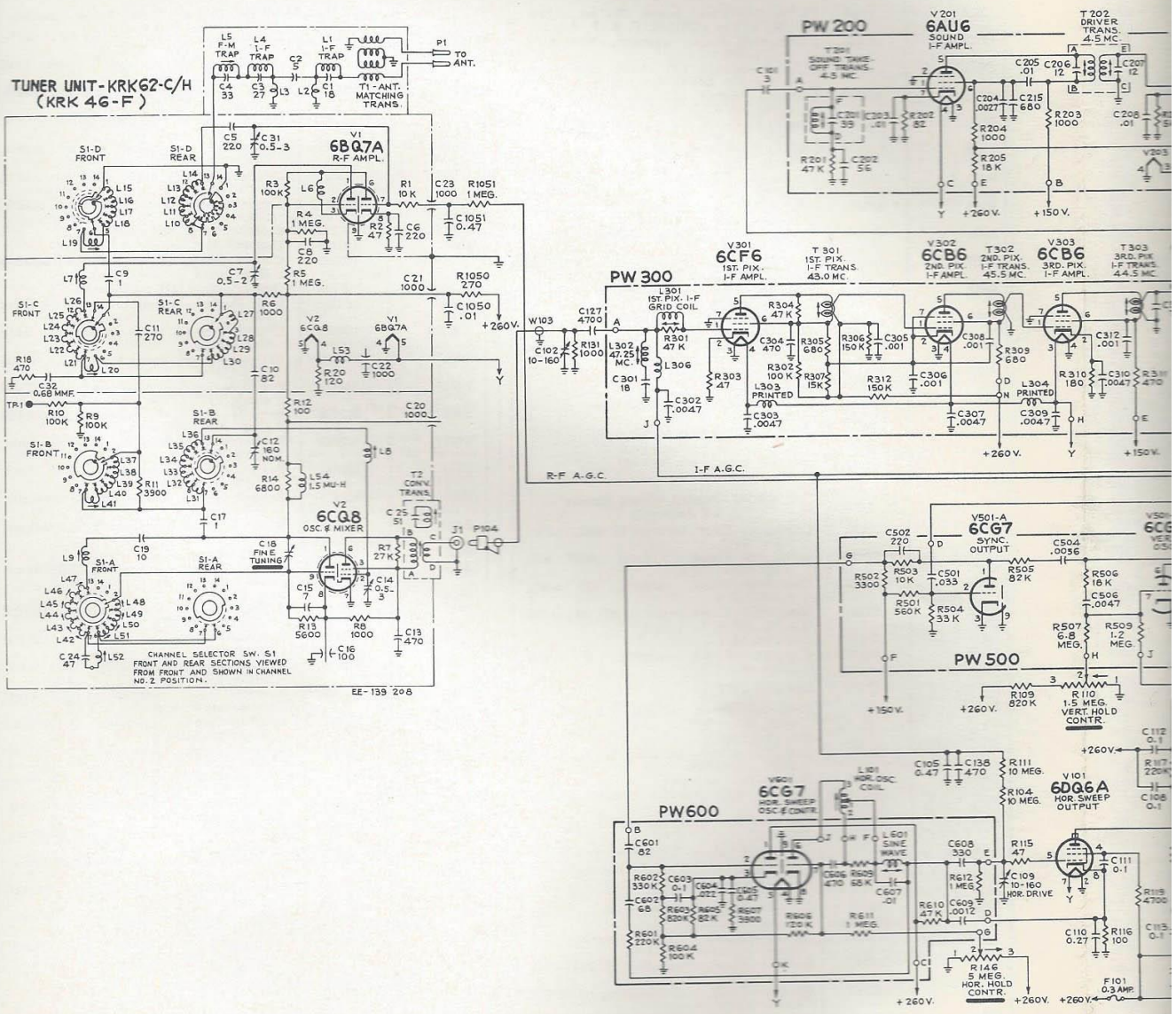

*Measured with 1 megohm ½ watt resistor in series with meter probe.

The schematic is shown in the latest condition at the time of printing.

All resistance value in ohms. K = 1000.

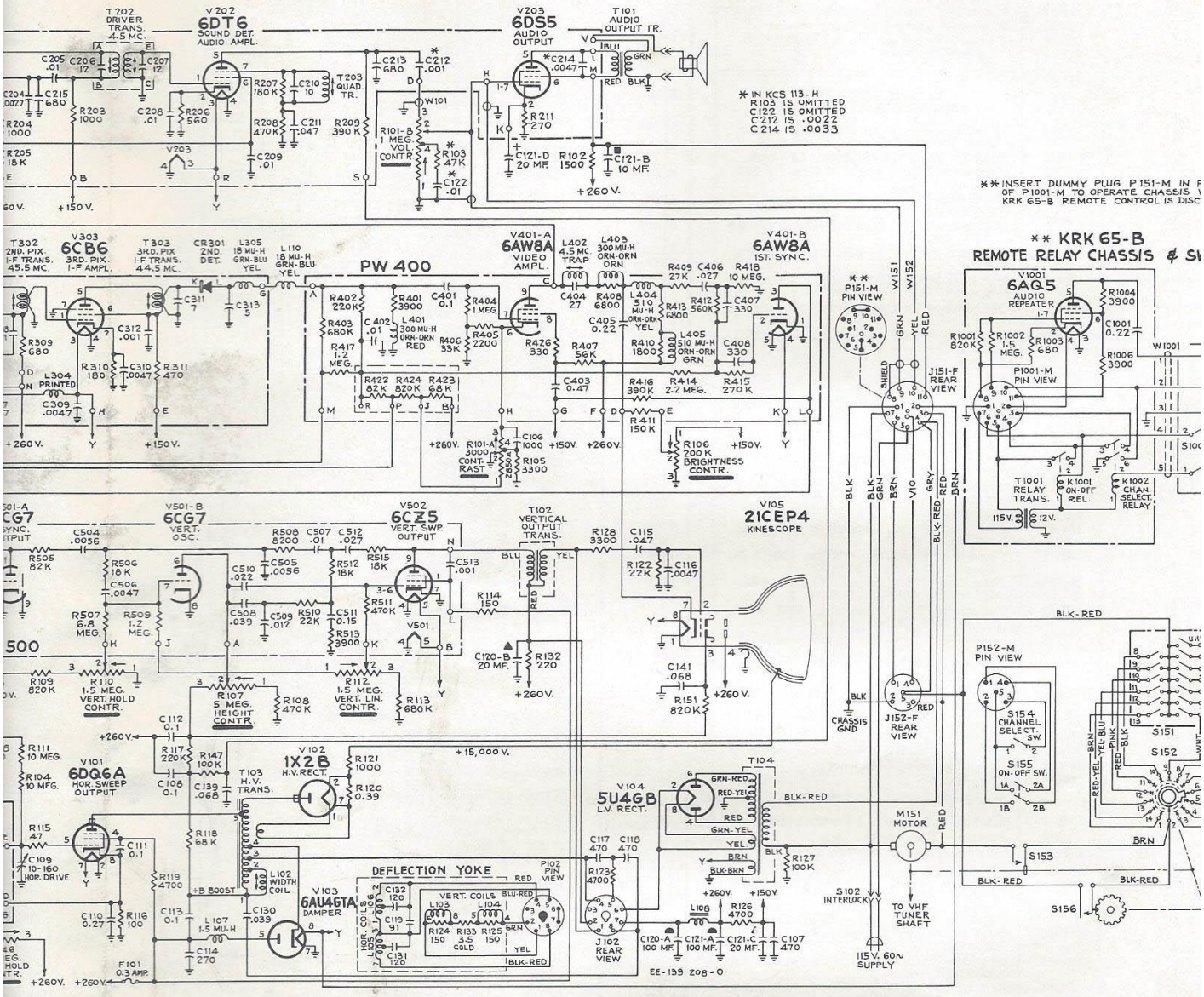

All capacitance values less than 1 in MF and above 1 in MMF unless otherwise noted.

Direction of arrows at controls indicates clockwise rotation.

Voltages listed in tabular form on pages 18 and 19.

Figure 27—Chassis Circuit Schematic Diagram KCS113H or

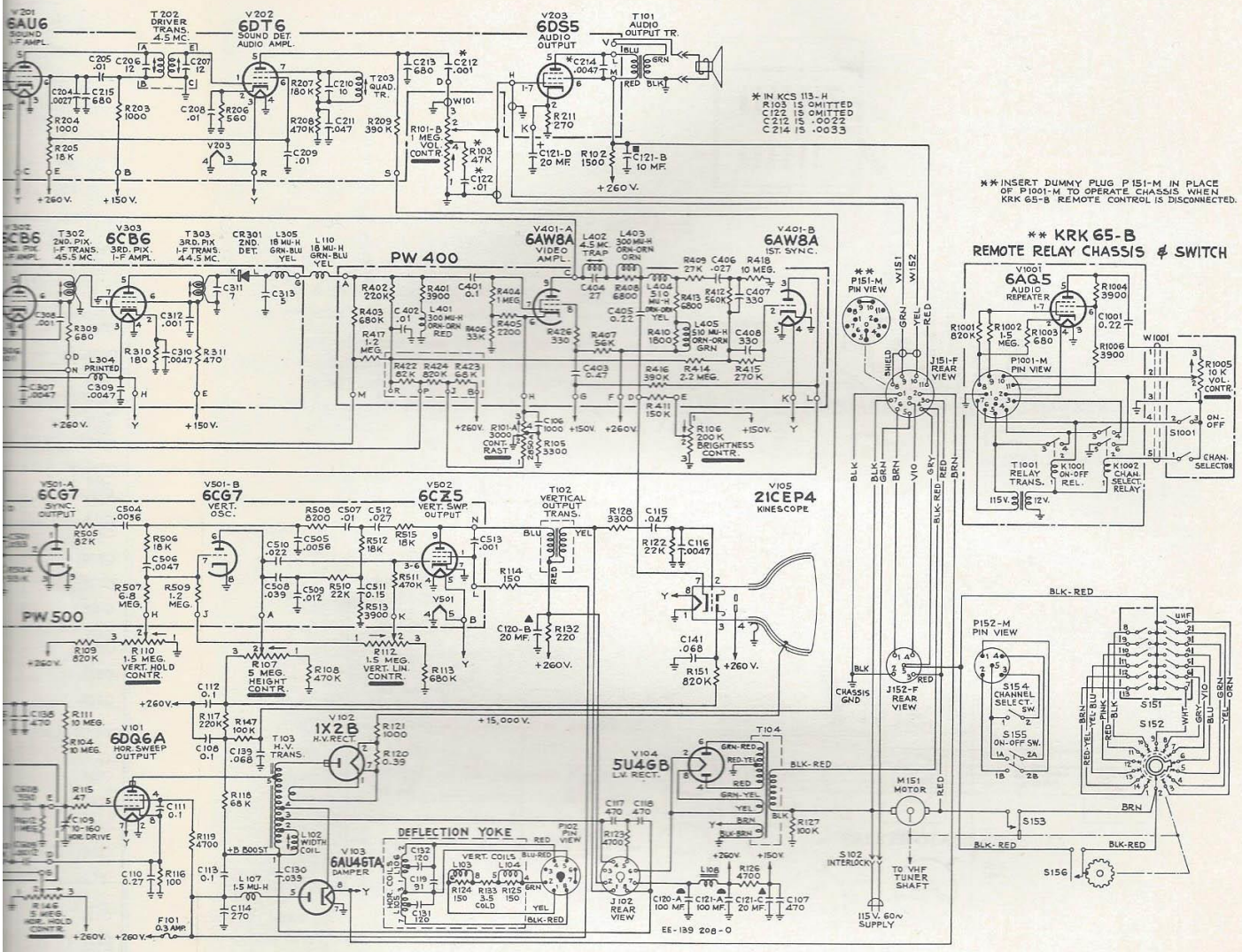

All capacitance values less than 1 in MF and above 1 in MMF unless otherwise noted.

Direction of arrows at controls indicates clockwise rotation.

CHASSIS CIRCUIT SCHEMATIC DIAGRAM KC

(See schematic at left for VHF Tuner used

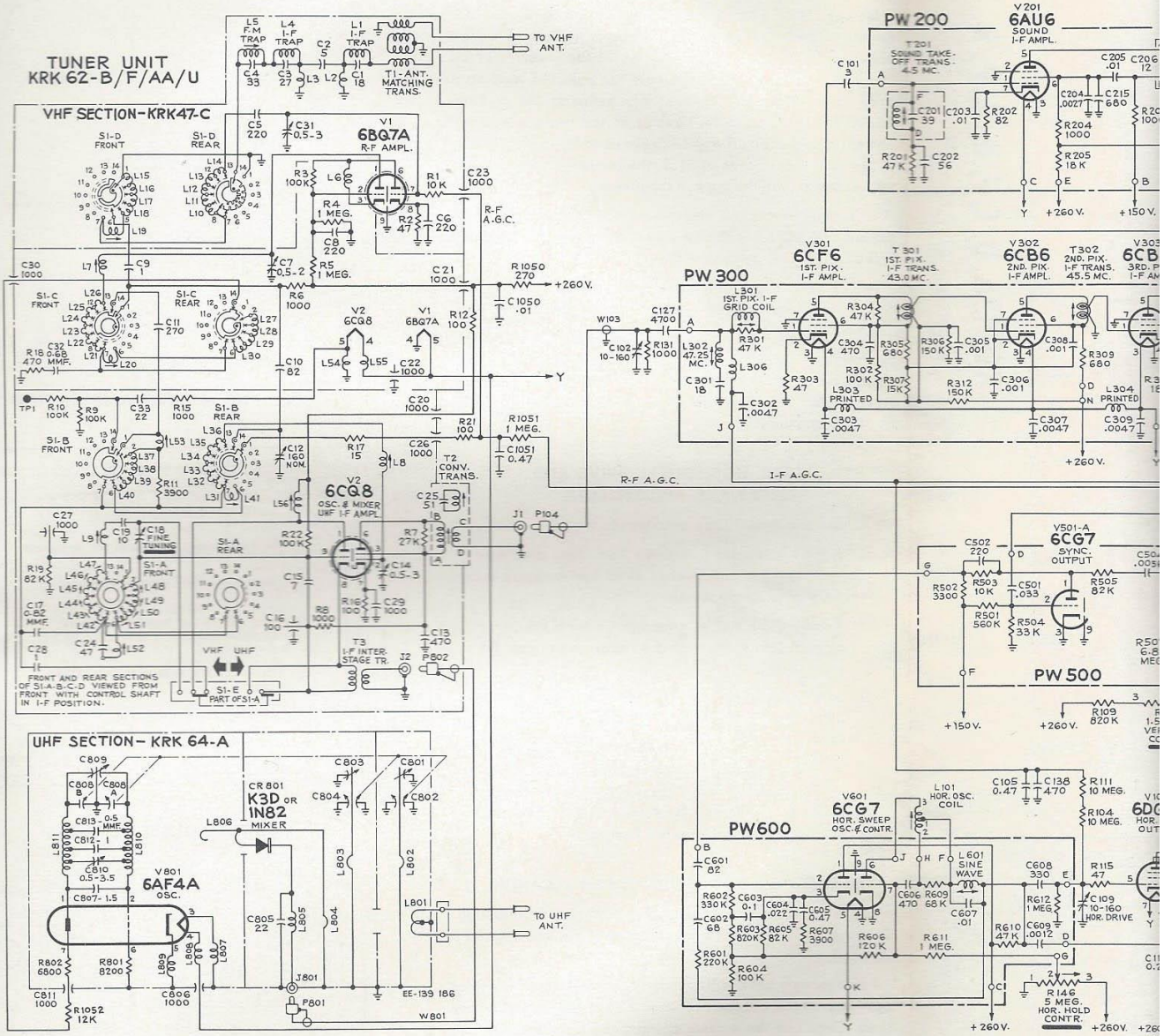

HIGH VOLTAGE WARNING

OPERATION OF THESE RECEIVERS OUTSIDE THE CABINET OR WITH THE COVERS REMOVED, INVOLVES A SHOCK HAZARD FROM THE RECEIVER POWER SUPPLIES. WORK ON THE RECEIVER SHOULD NOT BE ATTEMPTED BY ANYONE WHO IS NOT THOROUGHLY FAMILIAR WITH THE PRECAUTIONS NECESSARY WHEN WORKING ON HIGH VOLTAGE EQUIPMENT. DO NOT OPERATE THE RECEIVER WITH THE HIGH VOLTAGE COMPARTMENT SHIELD REMOVED. MAKE SURE THAT THE GROUND STRAP IS SECURELY FASTENED.

CHASSIS CIRCUIT SCHEMATIC DIAGRAM KCS113B, KCS113F, KCS113R

21-T-8202U to 21-T-8487U

(See schematic at left for VHF Tuner used in KCS113A, E & P)

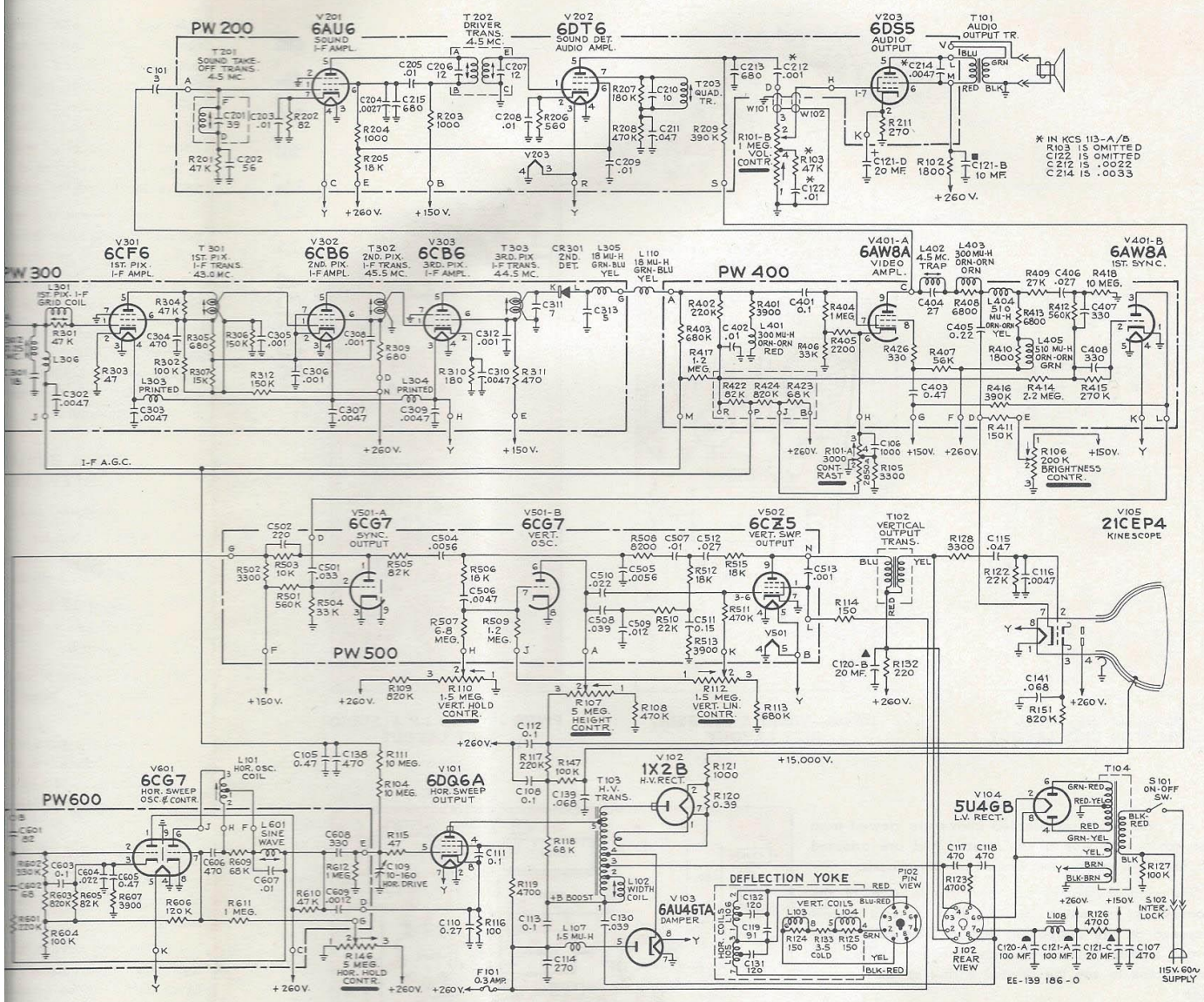

NING

COVERS REMOVED, INVOLVES A SHOCK
ER SHOULD NOT BE ATTEMPTED BY ANY-
NECESSARY WHEN WORKING ON HIGH
HIGH VOLTAGE COMPARTMENT SHIELD
NED.

The schematic is shown in the latest condition at the time of printing.

All resistance value in ohms. K = 1000.

All capacitance values less than 1 in MF and above 1 in MMF unless otherwise noted.

Direction of arrows at controls indicates clockwise rotation.

FIELD SERVICE DATA SHEET

21-RT-8202
21-T-8202U
SERIES

KCS113A, B, E, F, H, K, P, R

PRINTED WIRING ASSEMBLIES

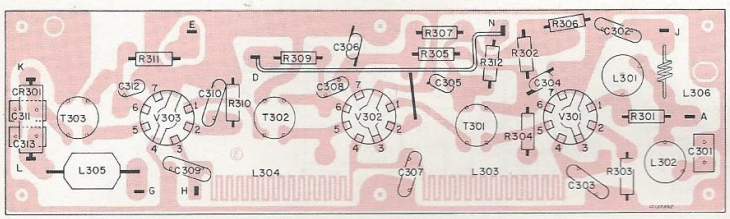

PW300—PICTURE I-F UNIT LAYOUT

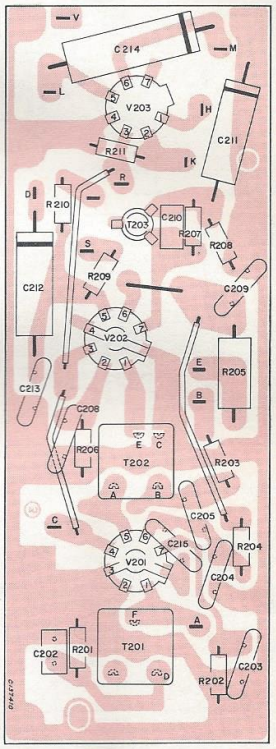

PW200—SOUND I-F & AUDIO UNIT LAYOUT

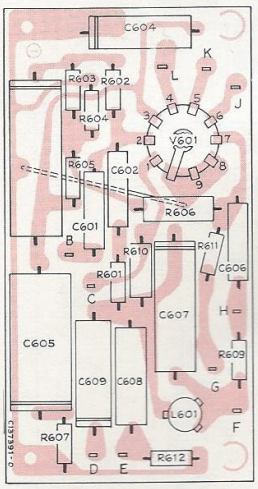

PW600—HORIZONTAL OSCILLATOR UNIT LAYOUT

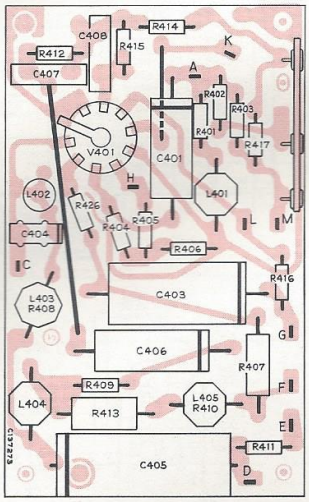

PW400—VIDEO & 1ST SYNC UNIT LAYOUT

The assemblies represented above are viewed from the component side of the boards and are oriented as they will usually be viewed on the chassis.

The printed wiring, on the reverse side of the boards, is presented in "phantom" views superimposed on the component layouts. This will enable circuit tracing without removing the assemblies from the chassis to see the printed wiring on the reverse side.

Component replacement, when necessary, should be made following the techniques outlined in Printed Circuit Board Service Data 1955 No. T13 dated 11/15/55.

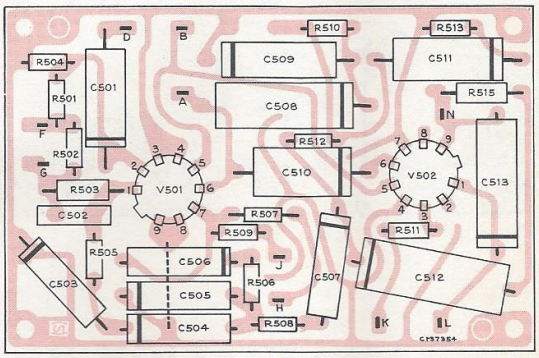

PW500—VERTICAL & SYNC OUTPUT UNIT LAYOUT

PREPARED BY COMMERCIAL SERVICE
RCA SERVICE CO., INC.
CAMDEN 8, N. J.
FOR

RADIO CORPORATION OF AMERICA
RCA VICTOR TELEVISION DIVISION

First Edition—First Printing 5-29-57

21-RT-8202
21-T-8202U
SERIES

FIELD SERVICE DATA SHEET

REMOTE CONTROL MODELS

Models 21-RT-8202 and 21-RT-8425 are equipped for remote control operation. The receiver is turned on by pressing the "On-off" switch on top of the receiver or on the remote control unit. Channels are selected automatically in sequence by momentarily pressing the channel selector switch on the receiver or at the remote location. The channels received will be determined by the presetting of the thirteen switches of S151, the remote control selector switch, located on the back of the receiver.

To provide automatic selection of the channels in a particular location, slide the switches to uncover the numbers of the channels to be received.

In addition to the automatic selection of channels, the channel selector may be operated manually at any time.

The volume of sound may be controlled locally or by means of the volume control on the remote control unit. It should be noted, however, that full control of the sound level is obtained when the unused volume control is first turned to maximum.

WIDTH, HORIZONTAL DRIVE AND SINEWAVE ADJUSTMENTS

A. Set width coil fully counter-clockwise.

B. Adjust drive for overdrive line then clockwise until line just disappears. If no line appears set fully counter-clockwise.

C. Adjust width for ¾" overscan at each side, with normal line voltage and normal brightness. Repeat Step B.

D. Turn horizontal hold control to the left, out of sync, to the point where interrupted oscillation occurs.

E. Adjust sinewave core, as the horizontal hold control is rotated to the left beyond the locked-in position, until 3 to 4 bars occur between the fall out point and interrupted oscillation.

KINESCOPE AND SAFETY GLASS CLEANING

The front safety glass may be removed to allow for cleaning of the kinescope faceplate and the safety glass if required.

Table models have a "U" shaped channel under the front top edge of the cabinet, in front of the top of the safety glass. Take out the screws holding the channels and remove the channel and safety glass.

Console models have a "U" shaped channel in front of the top edge of the safety glass and also at the bottom edge. Pry off the top and bottom channels starting at the extreme ends.

Insert the blade of a small screwdriver in one of the vertical slots in the middle of a retainer at the top of the safety glass. Slide the bar to the right to release the retainer.

The bottom retainers are removed in a similar manner except the slide bar is moved to the left.

The Kinescope faceplate and the safety glass should only be cleaned with a soft cloth and "Windex" or similar cleaning agent.

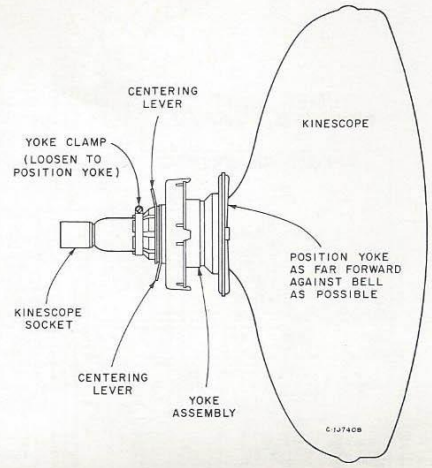

YOKE AND MAGNET ADJUSTMENTS

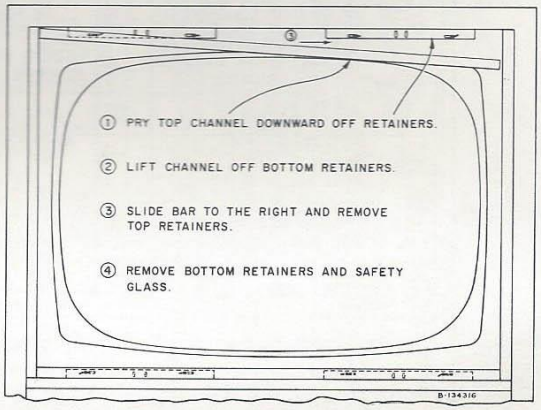

SAFETY GLASS REMOVAL

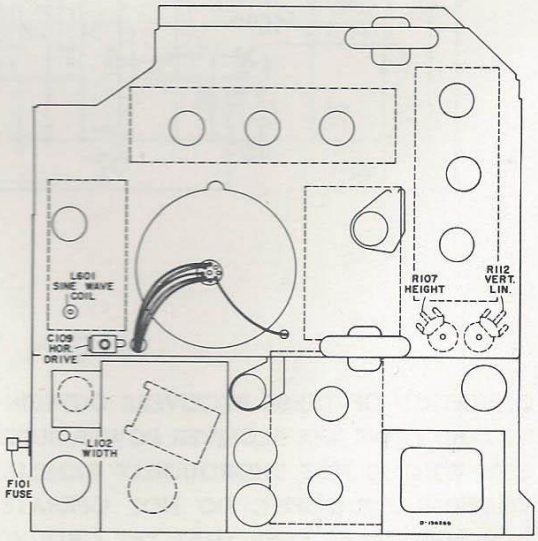

REAR ADJUSTMENTS

FIELD SERVICE DATA SHEET

21-RT-8202
21-T-8202U
SERIES

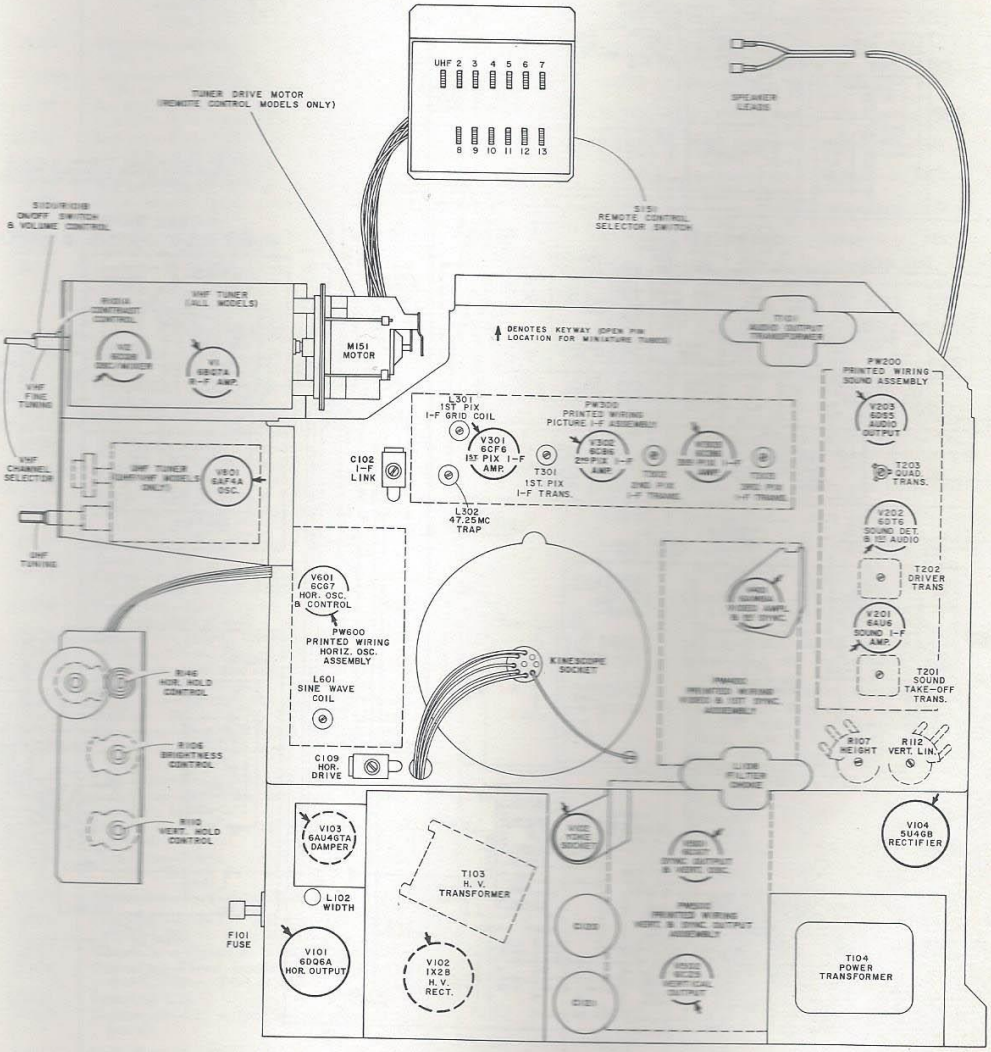

CHASSIS REAR VIEW

REPLACEMENT PARTS (Partial Listing)

SYMBOL NO.	STOCK NO.	DESCRIPTION
		CHASSIS ASSEMBLIES KCS113A, B, E, F, H, K, P & R
C101	102415	Capacitor—Fixed, ceramic, 3 mmf., ±1 mmf., 1000 v. N-750
C106	102416	Capacitor—Fixed, mica, 1000 mmf., ±10%, 300 v.
C107	77293	Capacitor—Fixed, ceramic, 470 mmf., +100 —0%, 500 v.
C114	76579	Capacitor—Fixed, mica, 270 mmf., ±20%, 1000 v.
C117, C118	104179	Capacitor—Fixed, ceramic, 470 mmf., ±10%, 2000 v.
C127	73473	Capacitor—Fixed, ceramic, 4700 mmf., +100 —0%, 500 v.
C138	77293	Same as C107
F101	104295	Resistor—Fuse type
R101A, B	104092	Control—"On-Off" volume, picture control. Includes S101. For KCS113A, B
R101A, B	104294	Control—"On-Off" volume, contrast control. Includes S101. For KCS113E, F, P, R
R101A, B	104922	Control—Volume and picture control. For KCS113K
R101A, B	104923	Control—Volume and picture control. For KCS113H
R102	104834	Resistor—Fixed, wire wound, 1800 ohms, ±10%, 4 w. For KCS113A, B, E, F, P, R
R102	104926	Resistor—Fixed, wire wound, 1500 ohms, 4 w. For KCS113H, K
R106	104088	Control—Brightness
R107	100290	Control—Height
R110	104089	Control—Vertical hold
R112	102408	Control—Vertical linearity
R116	104188	Resistor—Fixed, wire wound, 100 ohms, ±10%, 7 w.
R120	104181	Resistor—Fixed, wire wound, 0.39 ohms, ±10%, ½ w.
R126	104187	Resistor—Fixed, wire wound, 4700 ohms, ±10%, 7 w.
R146	104090	Control—Horizontal hold
T103	104236	Transformer—High voltage

21-RT-8202
21-T-8202U
SERIES

FIELD SERVICE DATA SHEET

SYMBOL NO.	STOCK NO.	DESCRIPTION
		PW200—Printed Wiring Sound Assembly
C202	102207	Capacitor—Fixed, ceramic, 56 mmf., ±10%, 500 v.
C203	73960	Capacitor—Fixed, ceramic, 10,000 mmf., +100 —0%, 500 v.
C204	104131	Capacitor—Fixed, ceramic, 2700 mmf., ±10%, 500 v.
C205	73960	Same as C203
C208, C209	73960	Same as C203
C210	104132	Capacitor—Fixed, ceramic, 10 mmf., ±10%, 500 v. N220
C213	104135	Capacitor—Fixed, ceramic, 680 mmf., ±10%, 500 v.
C215	102231	Capacitor—Fixed, ceramic, 680 mmf., ±20%, 500 v.
		PW300—Printed Wiring Picture I-F Assembly
C301	103614	Capacitor—Fixed, ceramic, 15 mmf., ±5%, 500 v. NPO
C302, C303	73473	Capacitor—Fixed, ceramic, .0047 mf., +100 —0%, 500 v.
C304	78622	Capacitor—Fixed, ceramic, 470 mmf., ±20%, 500 v.
C305, C306	77252	Capacitor—Fixed, ceramic, .001 mf., +100 —0%, 500 v.
C307	73473	Same as C302
C308	78623	Capacitor—Fixed, ceramic, .001 mf., ±20%, 500 v.
C309, C310	73473	Same as C302
C311	104177	Capacitor—Fixed, ceramic, 7 mmf., ±0.5 mmf., 500 v. NPO
C312	78623	Same as C308
C313	104178	Capacitor—Fixed, ceramic, 5 mmf., ±0.5 mmf., 500 v. NPO
CR301	79985	Crystal—2nd detector
		PW400—Printed Wiring Video Assembly
C402	73960	Capacitor—Fixed, ceramic, 0.01 mf., +100 —0%, 500 v.
C404	100352	Capacitor—Fixed, ceramic, 27 mmf., ±5%, 500 v. NPO
C407, C408	102656	Capacitor—Fixed, mica, 330 mmf., ±10%, 500 v.
		PW500—Printed Wiring Vertical Assembly
C502	104144	Capacitor—Fixed, mica, 220 mmf., ±10%, 500 v.
C513	73849	Capacitor—Fixed, paper, .001 mf., ±20%, 1600 v.
		PW600—Printed Wiring Horizontal Assembly
C601	76474	Capacitor—Fixed, mica, 82 mmf., ±5%, 1000 v.
C602	76475	Capacitor—Fixed, mica, 68 mmf., ±5%, 1000 v.
C606	104147	Capacitor—Fixed, mica, 470 mmf., ±5%, 1000 v.
C608	76476	Capacitor—Fixed, mica, 330 mmf., ±10%, 1000 v.
		YOKE & MAGNET ASSEMBLY
C119	103535	Capacitor—Fixed, ceramic, 91 mmf., ±10%, 2500 v. DC
C131, C132	103536	Capacitor—Fixed, ceramic, 120 mmf., ±10%, 2500 v. DC
	104078	Yoke—Deflection yoke assembly. Includes: C119, C131, C132, L103 to L106 Incl., P102, R124, R125
		MISCELLANEOUS
	102581	Knob—Brightness, vertical hold and tone control—maroon
	104400	Knob—Contrast control — maroon — for ebony Models 21RT8202 & 21T8202 & U
	104386	Knob—Contrast control — wine — for mahogany grain Models 21RT8425, 21T8205 & U, 21T8265 & U, 21T8375 & U, 21T8395 & U, 21T8405 & U, 21T8425 & U, 21T8445 & U, 21T8465 & U, 21T8485 & U
	104395	Knob—Contrast control—taupe—for walnut grain, oak grain Models 21T8207 & U, 21T8267 & U, 21T8376 & U, 21T8377 & U, 21T8397 & U, 21T8407 & U, 21T8426 & U, 21T8427 & U, 21T8447 & U, 21T8466 & U, 21T8467 & U, 21T8486 & U, 21T8487
	104396	Knob—Contrast control—mocha—for birch grain Models 21T8428 & U, 21T8448 & U, 21T8468 & U
	100620B	Knob—"On-Off" volume — maroon — for ebony Models 21RT8202 & 21T8202 & U
	101138B	Knob—"On-Off" volume—wine—for mahogany grain Models 21RT8425, 21T8205 & U, 21T8265 & U, 21T8375 & U, 21T8395 & U, 21T8405 & U, 21T8425 & U, 21T8445 & U, 21T8465 & U, 21T8485 & U
	100621B	Knob—"On-Off" volume—taupe—for walnut grain, oak grain Models 21T8207 & U, 21T8267 & U, 21T8376 & U, 21T8377 & U, 21T8397 & U, 21T8407 & U, 21T8426 & U, 21T8427 & U, 21T8447 & U, 21T8466 & U, 21T8467 & U, 21T8486 & U, 21T8487 & U
	101140B*	Knob—"On-Off" volume — mocha — for birch grain Models 21T8428 & U, 21T8448 & U, 21T8468 & U
	104076	Knob—UHF dial knob — maroon — for ebony Model 21T8202U for Tuner KRK64A
	104522	Knob—UHF dial knob — maroon — for ebony Model 21T8202U for Tuner KRK-64A-M1
	104074	Knob—UHF dial knob—wine—for mahogany grain Models 21T8205U, 21T8265U, 21T8375U, 21T8395U, 21T8405U, 21T8425U, 21T8445U, 21T8465U, 21T8485U for Tuner KRK64A
	104520	Knob—UHF dial knob—wine—for mahogany grain Models 21T8205U, 21T8265U, 21T8375U, 21T8395U, 21T8405U, 21T8425U, 21T8445U, 21T8465U, 21T8485U for Tuner KRK64A-M1
	104075	Knob—UHF dial knob—gray—for walnut grain, oak grain, birch grain Models 21T8207U, 21T8267U, 21T8376U, 21T8377U, 21T8397U, 21T8407U, 21T8426U, 21T8427U, 21T8428U, 21T8447U, 21T8448U, 21T8466U, 21T8467U, 21T8468U, 21T8486U, 21T8487U for Tuner KRK64A
	104521	Knob—UHF dial knob—gray—for walnut grain, oak grain, birch grain Models 21T8207U, 21T8267U, 21T8376U, 21T8377U, 21T8397U, 21T8407U, 21T8426U, 21T8427U, 21T8428U, 21T8447U, 21T8448U, 21T8466U, 21T8467U, 21T8468U, 21T8486U, 21T8487U for Tuner KRK64A-M1
	104073	Knob—UHF tuning — maroon — for ebony Model 21T8202U
	104071	Knob—UHF tuning—wine—for mahogany grain Models 21T8205U, 21T8265U, 21T-8375U, 21T8395U, 21T8405U, 21T8425U, 21T8445U, 21T8465U, 21T8485U
	104072	Knob—UHF tuning — taupe — for walnut grain, oak grain Models 21T8207U, 21T-8267U, 21T8376U, 21T8377U, 21T8397U, 21T8407U, 21T8426U, 21T8427U, 21T8447U, 21T8466U, 21T8467U, 21T8486U, 21T8487U
	104405	Knob—UHF tuning — mocha — for birch grain Models 21T8428U, 21T8448U, 21T-8468U
	104069	Knob—VHF channel selector — maroon — for ebony Models 21RT8202, 21T8202
	104304	Knob—VHF channel selector—wine—for mahogany grain Models 21RT8425, 21T-8205, 21T8265, 21T8375, 21T8395, 21T8405, 21T8425, 21T8445, 21T8465, 21T8485
	104303	Knob—VHF channel selector—taupe — for walnut grain, oak grain Models 21T8207, 21T8267, 21T8376, 21T8377, 21T8397, 21T-8407, 21T8426, 21T8427, 21T8447, 21T8466, 21T8467, 21T8486, 21T8487
	104597	Knob—VHF channel selector—mocha—for birch grain Models 21T8428, 21T8448, 21T8468
	104070	Knob—VHF/UHF channel selector — maroon—for ebony Model 21T8202U
	104305	Knob—VHF/UHF channel selector — wine —for mahogany grain Models 21T8205U, 21T8265U, 21T8375U, 21T8395U, 21T8405U, 21T8425U, 21T8445U, 21T8465U, 21T8485U
	104306	Knob—VHF/UHF channel selector—taupe —for walnut grain, oak grain Models 21T8207U, 21T8267U, 21T8376U, 21T8377U, 21T8397U, 21T8407U, 21T8426U, 21T8427U, 21T8447U, 21T8466U, 21T8467U, 21T8486U, 21T8487U
	104596	Knob—VHF/UHF channel selector—mocha —for birch grain Models 21T8428U, 21T-8448U, 21T8468U
	104401	Knob—VHF and UHF fine tuning—maroon —for ebony Models 21RT8202, 21T8202 & U
	104397	Knob—VHF and UHF fine tuning — wine—for mahogany grain Models 21RT8425, 21T8205 & U, 21T8265 & U, 21T-8375 & U, 21T8395 & U, 21T8405 & U, 21T8425 & U, 21T8445 & U, 21T8465 & U, 21T8485 & U
	104398	Knob—VHF and UHF fine tuning—taupe—for walnut grain, oak grain Models 21T-8207 & U, 21T8267 & U, 21T8376 & U, 21T-8377 & U, 21T8397 & U, 21T8407 & U, 21T8426 & U, 21T8427 & U, 21T8447 & U, 21T8466 & U, 21T8467 & U, 21T8486 & U, 21T8487 & U
	104399	Knob—VHF and UHF fine tuning—mocha —for birch grain Models 21T8428 & U, 21T8448 & U, 21T8468 & U

CIRCUIT SCHEMATIC DIAGRAM KCS113B, KCS11
(See Figure 27 for KRK46C used in KCS113A

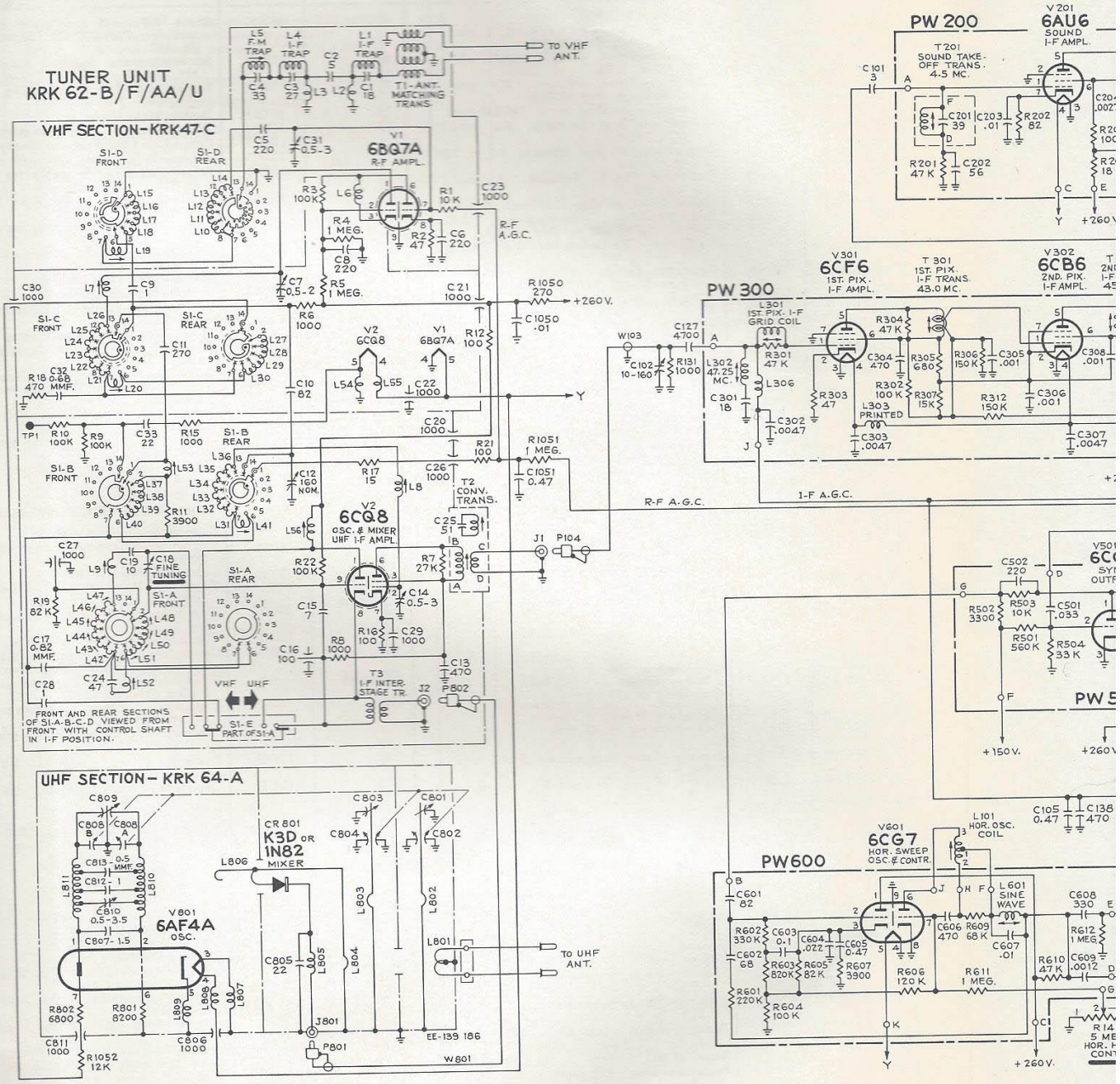

REFER TO TABLE ON PAGE 2 FOR MODEL, CHASSIS AND TUNER CROSS-REFERENCE

The schematic is shown in the latest condition at the time of printing.

All resistance value in ohms. K = 1000.

*Measured with 1 megohm, ½ watt resistor in series with probe.

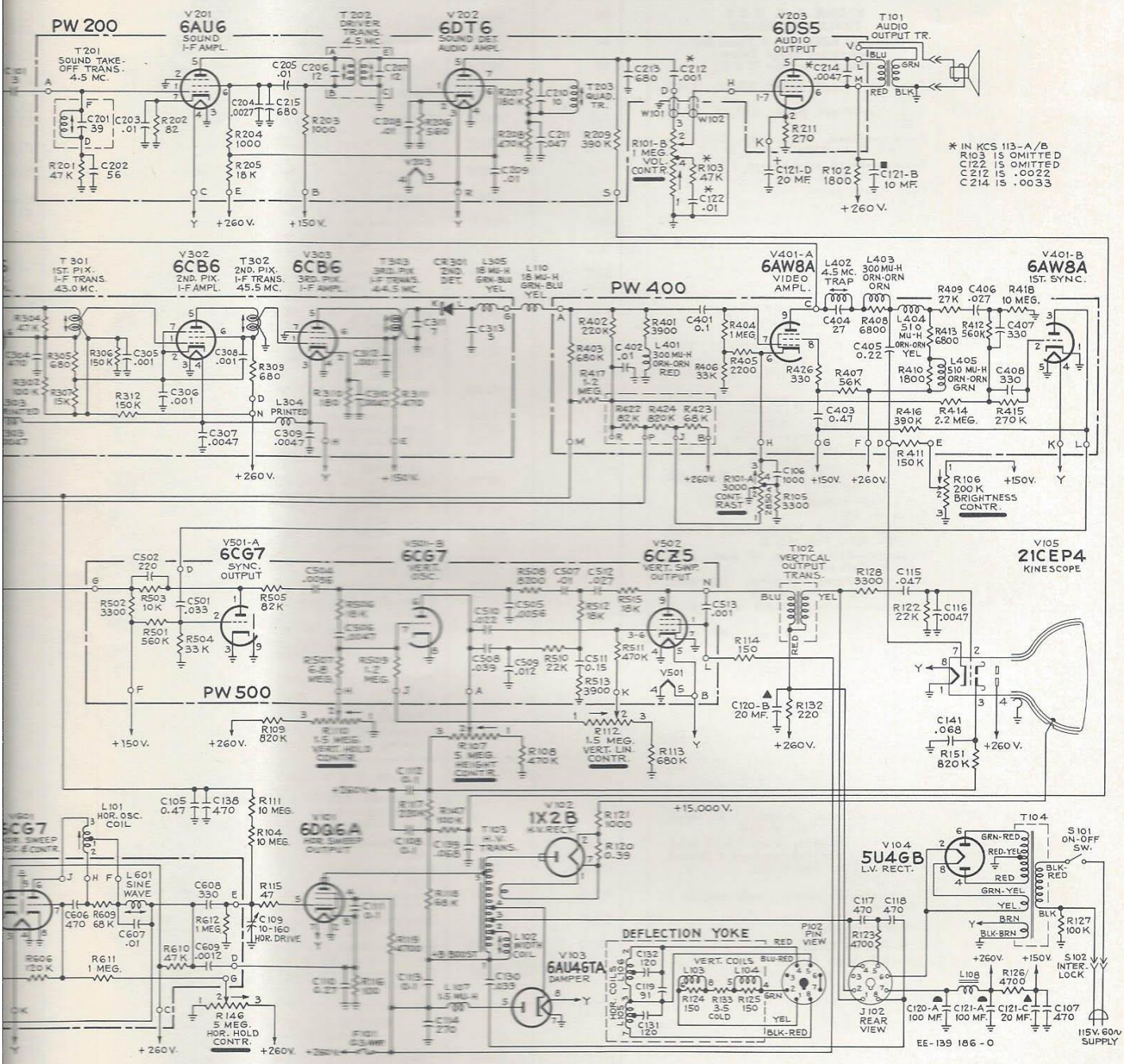

the latest
ing.
K = 1000.
½ watt re-

All capacitance values less than 1 in MF and above 1 in MMF unless otherwise noted.

Direction of arrows at controls indicates clockwise rotation.

Voltages listed in tabular form on pages 18 and 19.

Figure 28—Circuit Schematic Diagram KCS113B, F or R

SYMBOL NO.	STOCK NO.	DESCRIPTION
		KRK62A, C, E, H & T TUNER ASSEMBLIES (Includes KRK46C or F Tuner Subassemblies Listed Below) *(Refer to Figures 20 & 21)*
C1050	73960	Capacitor—Fixed, paper, 0.01mf., ±10%, 500 v.
C1051	79148A	Capacitor—Fixed, paper, 0.47 mf., ±10%, 200 v.
R1050	502127	Resistor—Fixed, composition, 270 ohms, ±10%, ½ w. KRK62A, C, E, H & T
R1051	502510	Resistor—Fixed, composition, 1.0 megohm, ±10%, ½ w. KRK62A, C, E, H & T
	105070	Cam—Motor tuning cam
	105071	Motor—Channel selector motor
	105073	Stud—Motor switch assembly mounting studs (2 req'd)
	105068	Switch—Channel selector button switch
	105069	Switch—Channel selector wafer
	105072	Switch—Motor tuning cam switch
		KRK46C & F VHF TUNER SUBASSEMBLIES
C1	102646	Capacitor—Fixed, ceramic, 18 mmf., ±5%, 500 v. Part of 103525
C2	102571	Capacitor—Fixed, ceramic, 5 mmf., ±5%, 500 v. Part of 103525
C3	100352	Capacitor—Fixed, ceramic, 27 mmf., ±5%, 500 v. Part of 103525
C4	102573	Capacitor—Fixed, ceramic, 33 mmf., ±10%, 500 v. Part of 103525
C5	100672	Capacitor—Fixed, ceramic, 220 mmf., ±20%, 500 v. Part of S1D
C6	100672	Capacitor—Fixed, ceramic, 220 mmf., ±10%, 500 v.
C7	103554	Capacitor—Variable, 0.3-2.0 mmf.
C8	100672	Same as C6
C9	77690	Capacitor—Fixed, headed-lead, 1 mmf., ±10%, 500 v. Part of S1D
C10	103560	Capacitor—Fixed, mica, 82 mmf., ±5%, 500 v. Part of S1C
C11	77838	Capacitor—Fixed, ceramic, 270 mmf., ±20%, 500 v. Part of S1B
C12	103519	Capacitor—Variable band with 140-200 mmf., ±2%, 500 v.
C13	78622	Capacitor—Fixed, ceramic, 470 mmf., ±10%, 500 v.
C14	103552	Capacitor—Variable, mica, 0.3-3.0 mmf.
C15	103523	Capacitor—Fixed, ceramic, 7 mmf., ±10%, 500 v.
C16	103518	Capacitor—Feed thru, 100 mmf., 500 v.
C17	77690	Capacitor—Fixed, headed-lead, 1.0 mmf., ±10%, 500 v.
C18	——	Capacitor—Fine tuning capacitor. Part of S1A
C19	103556	Capacitor—Fixed, ceramic, 10 mmf., ±10%, 500 v. Part of S1A
C20 to C23 Incl.	103517	Capacitor—Feed thru, 1000 mmf., 500 v.
C24	103559	Capacitor—Fixed, ceramic, 47 mmf., ±10%, 500 v. Part of S1A
C31	103553	Capacitor—Variable, mica, 0.3-3.0 mmf.
C32	71504	Capacitor—Fixed, headed-lead, 0.68 mmf., ±20%, 500 v. Part of S1C
C34	103517	Same as C20
J1	78237	Connector—I.F. output single contact — female
L1 to L4 Incl.	——	Coil—Part of 103525
L5	——	Coil—Part of 103525
L6	76562	Coil—R.F. plate coil
L7	——	Coil—Part of S1C
L8	——	Coil—Part of S1B
L9	——	Coil—Part of S1A
L10 to L19 Incl.	——	Coil—Part of S1D
L20 to L30 Incl.	——	Coil—Part of S1C
L31 to L41 Incl.	——	Coil—Part of S1B
L42 to L52 Incl.	——	Coil—Part of S1A
L53	——	Coil—Heater choke
L54	103524	Reactor—Plate choke coil, 1.5 microhenry
R1	502310	Resistor—Fixed, composition, 10,000 ohms, ±20%, ½ w.
R2	502047	Resistor—Fixed, composition, 47 ohms, ±10%, ½ w.
R3	502410	Resistor—Fixed, composition, 100,000 ohms, ±20%, ½ w.
R4, R5	502510	Resistor—Fixed, composition, 1 megohm, ±10%, ½ w.
R6	502210	Resistor—Fixed, composition, 1000 ohms, ±10%, ½ w. Part of S1C
R7	502327	Resistor—Fixed, composition, 27,000 ohms, ±5%, ½ w.
R8	502210	Resistor—Fixed, composition, 1000 ohms, ±20%, ½ w.
R9, R10	502410	Resistor—Fixed, composition, 100,000 ohms, ±20%, ½ w. Part of S1B
R11	502239	Resistor—Fixed, composition, 3900 ohms, ±10%, ½ w. Part of S1B
R12	502110	Resistor—Fixed, composition, 100 ohms, ±20%, ½ w.
R13	502256	Resistor—Fixed, composition, 5600 ohms, ±10%, ½ w.
R14	502268	Resistor—Fixed, composition, 6800 ohms, ±20%, ½ w.
R18	502147	Resistor—Fixed, composition, 470 ohms, ±20%, ½ w. Part of S1C
R20	502112	Resistor—Fixed, composition, 120 ohms, ±10%, ½ w.
S1A	103561	Stator—Oscillator coil and stator assembly. Includes: C19, C24, L9, L42 to L52 Incl.
S1B	103563	Stator—Mixer coil and stator assembly. Includes: C11, L8, L31 to L41 Incl., R9, R10, R11
S1C	103562	Stator—R.F. coil and stator assembly. Includes: C10, C32, L7, L20 to L30 Incl., R6, R18
S1D	103564	Stator—Antenna coil and stator assembly. Includes: C5, C9, L10 to L19 Incl.
T1	73591	Coil—Antenna matching coil (2 req'd)
T2	103516	Transformer—Mixer plate transformer
	103513	Cam—Fine tuning cam assembly
	104440	Detent—Detent plate and shaft assembly (KRK46C)
	105074	Detent—Detent plate and shaft assembly (KRK46F)
	103555	Holder—Nylon for adjusting screw for coils L19, L20, L41
	103520	Shield—Tube shield for V1
	100668	Shield—Tube shield for V2
	79718	Socket—Tube socket, 9 pin miniature for V1, V2
	100023	Spring—Stator shield grounding spring
	103515	Strap—Coil and stator mounting strap—steel
	104432	Terminal—Test point terminal
	103525	Transformer—Antenna matching transformer assembly. Includes C1 to C4 Incl., L1 to L5 Incl.
	104563	Tuner—R.F. tuning unit complete—VHF—KRK46C
	105075	Tuner—R.F. tuning unit complete—VHF—KRK46F
	76221	Washer—"C" washer front shield retaining
		KRK62B, F & U TUNER ASSEMBLIES (Includes KRK47C & KRK64A Tuner Subassemblies Listed Below) *(Refer to Figures 20 & 21)*
C1050	73960	Capacitor—Fixed, paper, 0.01 mf., ±10%, 500 v.
C1051	79148A	Capacitor—Fixed, paper, 0.47 mf., ±10%, 200 v.
R1050	502127	Resistor—Fixed, composition, 270 ohms, ±10%, ½ w. KRK62B, F & U
R1051	502510	Resistor—Fixed, composition, 1.0 megohm, ±10%, ½ w. KRK62B, F & U
R1052	522312	Resistor—Fixed, composition, 12,000 ohms, ±10%, 2 w. KRK62B, F & U
	78269	Connector—Two contact male for UHF output cable. KRK62F & U
		KRK47C & F VHF TUNER SUBASSEMBLIES
C1	102646	Capacitor—Fixed, ceramic, 18 mmf., ±5%, 500 v. Part of 103525 — Transformer
C2	102571	Capacitor—Fixed, ceramic, 5 mmf., ±5%, 500 v. Part of 103525—Transformer
C3	100352	Capacitor—Fixed, ceramic, 27 mmf., ±5%, 500 v. Part of 103525—Transformer
C4	102573	Capacitor—Fixed, ceramic, 33 mmf., ±10%, 500 v. Part of 103525 — Transformer
C5	100672	Capacitor—Fixed, ceramic, 220 mmf., ±20%, 500 v. Part of S1D
C6	100672	Capacitor—Fixed, ceramic, 220 mmf., ±10%, 500 v.
C7	103554	Capacitor—Variable trimmer, 0.3-2.0 mmf.

REPLACEMENT PARTS (Continued)

SYMBOL NO.	STOCK NO.	DESCRIPTION
C8	100672	Same as C6
C9	77690	Capacitor—Fixed, headed-lead, 1 mmf., ±10%, 500 v. Part of S1D
C10	103560	Capacitor—Fixed, mica, 82 mmf., ±5%, 500 v. Part of S1C
C11	77838	Capacitor—Fixed, ceramic, 270 mmf., ±20%, 500 v. Part of S1B
C12	103519	Capacitor—Variable, mica, 140-200 mmf.
C13	78622	Capacitor—Fixed, ceramic, 470 mmf., ±10%, 500 v.
C14	102552	Capacitor—Variable, trimmer, 0.3 to 3.0 mmf.
C15	103523	Capacitor—Fixed, ceramic, 7 mmf., ±10%, 500 v.
C16	103518	Capacitor—Feed thru, 100 mmf., 500 v.
C17	77689	Capacitor—Fixed, headed-lead, 0.82 mmf., ±10%, 500 v. Part of S1A
C18	——	Capacitor—Fine tuning capacitor. Part of S1A
C19	103556	Capacitor—Fixed, ceramic, 10 mmf., ±.5 mmf., 500 v. Part of S1A
C20 to C23 Incl.	103517	Capacitor—Feed-thru, 1000 mmf., 500 v.
C24	103559	Capacitor—Fixed, ceramic, 47 mmf., ±10%, 500 v. Part of S1A
C26, C27	103517	Same as C20
C28	77690	Capacitor—Fixed, headed-lead, 1.0 mmf., ±10%, 500 v. Part of S1A
C29	77252	Capacitor—Fixed, ceramic, 1000 mmf., +100 —0%, 500 v.
C30	103517	Same as C20
C31	103553	Capacitor—Variable, trimmer, 0.3-3.0 mmf.
C32	71504	Capacitor—Fixed, headed-lead, 0.68 mmf., ±20%, 500 v. Part of S1C
C33	103534	Capacitor—Fixed, ceramic, 22 mmf. Part of S1B
C34	103517	Same as C20
J1, J2	78237	Connector—I.F. output and U.H.F. input
L1 to L5 Incl.	——	Coil—Part of 103525
L6	76562	Coil—R.F. plate coil
L7	——	Coil—Part of S1C
L8	——	Coil—Part of S1B
L9	103531	Coil—I.F. interstage. Part of S1A
L10 to L19 Incl.	——	Coil—Part of S1D
L20 to L30 Incl.	——	Coil—Part of S1C
L31 to L41 Incl.	——	Coil—Part of S1B
L42 to L52 Incl.	——	Coil—Part of S1A
L53	——	Coil—Part of S1B
L54, L55	——	Coil—Filament choke coil
L56	——	Coil
R1	502310	Resistor—Fixed, composition, 10,000 ohms, ±20%, ½ w.
R2	502047	Resistor—Fixed, composition, 47 ohms, +10%, ½ w.
R3	502410	Resistor—Fixed, composition, 100,000 ohms, ±20%, ½ w.
R4, R5	502510	Resistor—Fixed, composition, 1 megohm, ±10%, ½ w.
R6	502210	Resistor—Fixed, composition, 1000 ohms, ±10%, ½ w. Part of S1C
R7	502327	Resistor—Fixed, composition, 27,000 ohms, ±5%, ½ w.
R8	502210	Resistor—Fixed, composition, 1000 ohms, ±20%, ½ w.
R9, R10	502410	Resistor—Fixed, composition, 100,000 ohms, ±20%, ½ w. Part of S1B
R11	502239	Resistor—Fixed, composition, 3900 ohms, ±10%, ½ w. Part of S1B
R12	502110	Resistor—Fixed, composition, 100 ohms, ±20%, ½ w.
R15	502210	Resistor—Fixed, composition, 1000 ohms, ±20%, ½ w. Part of S1B
R16		Same as R12
R17	502015	Resistor—Fixed, composition, 15 ohms, ±10%, ½ w.
R18	502147	Resistor—Fixed, composition, 470 ohms, ±20%, ½ w. Part of S1C
R19	502382	Resistor—Fixed, composition, 82,000 ohms, ±10%, ½ w.
R21	502110	Resistor—Fixed, composition, 100 ohms, ±10%, ½ w.
R22	502410	Resistor—Fixed, composition, 100,000 ohms, ±10%, ½ w.
S1A	103549	Stator—Oscillator coil and stator assembly. Includes: C17, C19, C24, L9, L42 to L52 Incl.
S1B	103551	Stator—Mixer coil and stator assembly. Includes: C11, L8, L31 to L41 Incl., L53
S1C	103550	Stator—R.F. coil and stator assembly. Includes: C10, C32, L7, L20 to L30 Incl., R6, R18
S1D	103564	Stator—Antenna coil and stator assembly. Includes: C5, C9, L10 to L19 Incl.
T1	73591	Transformer—Antenna matching coil only (2 req'd). Part of 103525
T2	103516	Transformer—Mixer plate
T3	103668	Transformer—UHF I.F. transformer
	103513	Cam—Fine tuning cam assembly
	104446	Detent—Detent plate and shaft assembly
	103533	Form—Coil form assembly for L8. Part of S1B
	103557	Form—Coil form assembly for L53. Part of S1B
	103532	Form—Coil form and core assembly for L56
	103555	Holder—Nylon to support adjusting screw for L19, L20, L53
	103520	Shield—Tube shield for V1
	100668	Shield—Tube shield for V2
	79718	Socket—Tube socket, 9 pin miniature for V1, V2
	100023	Spring—Stator shield grounding spring
	103515	Strap—Coil and stator mounting strap—steel
	103525	Transformer—Antenna matching transformer. Includes: C1 to C4 Incl., L1 to L5 Incl.
	104558	Tuner—R.F. tuning unit assembly—VHF—KRK47C
	76221	Washer—"C" type retaining washer for front shield
	103522	Washer—Spring washer friction type for front shield
		KRK64A UHF TUNER SUBASSEMBLY
C1	——	Capacitor—Antenna trimmer
C2	——	Capacitor—Antenna section of tuning capacitor
C3	——	Capacitor—Mixer trimmer
C4	——	Capacitor—Mixer section of tuning capacitor
C5	104915	Capacitor—Fixed, ceramic, 22 mmf., ±5%, 500 v.
C6	103997	Capacitor—Feed thru, 1000 mmf., 500 v.
C7	102978	Capacitor—Fixed, ceramic, 1.5 mmf., ±0.25 mmf., 500 v. Temp. Coeff. N750
C8A, C8B	——	Capacitor—Variable, oscillator section of tuning capacitor
C9	——	Capacitor—Variable, high frequency oscillator trimmer
C10	——	Capacitor—Variable, low end trimmer
C11		Same as C6
C12	104916	Capacitor—Fixed, ceramic, 1.0 mmf., ±.1 mmf., 500 v.
C13	104917	Capacitor—Fixed, ceramic, 0.5 mmf., ±.1 mmf., 500 v.
C14		Same as C6
CR1	104001	Rectifier—Crystal diode type 1N82
L1	——	Reactor—Antenna coupling loop
L2	——	Reactor—Antenna tank coil
L3	——	Reactor—Mixer tank
L4	——	Reactor—Mixer R.F. coupling
L5	——	Coil—I.F. coil
L6	——	Reactor—Mixer—osc. coupling
L7, L8	——	Reactor—Filament choke
L9	——	Reactor—Cathode choke
L10, L11	——	Reactor—Oscillator tank
R1	502282	Resistor—Fixed, composition, 8200 ohms, ±10%, ½ w.
R2	512268	Resistor—Fixed, composition, 6800 ohms, ±10%, 1 w.
	103049	Bearing—Front ball race and bearing assembly
	103733	Gear—Dial gear assembly insulated
	101206A	Gear—Dial gear assembly not insulated
	101205	Gear—R.F. rotor gear assembly with spring
	101204	Gear—Spur 48 teeth steel
	101209A	Gear—UHF drive gear assembly, zinc die cast
	104919	Jack—Output jack female two contact
	14343	Retainer—"C" type retainer
	70527	Screw—Allen Hd. set screw 0.188" lg.
	101208	Shaft—Cold, UHF drive shaft steel
	101207	Shaft—Insulated, UHF drive shaft fibre
	104918	Shield—Tube shield, for V1
	104012	Socket—Tube socket, for V1
	104656	Stop—UHF gang stop with one wing small
	101201	Stop—UHF gang stop with two wings
	101202	Stop—UHF gang stop with three wings

SYMBOL NO.	STOCK NO.	DESCRIPTION
	104591	Tuner—R.F. tuning unit assembly KRK64A
	33726	Washer—"C" type retaining washer
	100674	Washer—Spring washer ½" O.D. x 0.260" I.D. x 0.005" thk.
		CHASSIS ASSEMBLIES KCS113A, B, E, F, H, K, P & R
C101	102415	Capacitor—Fixed, ceramic, 3 mmf., ±1 mmf., 1000 v. N-750
C102	100849	Trimmer—Mica, 10-160 mmf., I.F. Link
C105	73787	Capacitor—Fixed, paper, 0.47 mf., ±20%, 200 v.
C106	102416	Capacitor—Fixed, mica, 1000 mmf., ±10%, 300 v.
C107	77293	Capacitor—Fixed, ceramic, 470 mmf., +100 —0%, 500 v.
C108	73551	Capacitor—Fixed, paper, 0.1 mf., ±20%, 400 v.
C109	102412	Trimmer—Mica, 10-160 mmf., horizontal drive
C110	73786	Capacitor—Fixed, paper, 0.27 mf., ±10%, 200 v.
C111	73557	Capacitor—Fixed, paper, 0.1 mf., ±20%, 600 v.
C112		Same as C108
C113	73557	Capacitor—Fixed, paper, 0.1 mf., ±10%, 600 v.
C114	76579	Capacitor—Fixed, mica, 270 mmf., ±20%, 1000 v.
C115	73553	Capacitor—Fixed, paper, .047 mf., ±20%, 400 v.
C116	79017	Capacitor—Fixed, paper, .0047 mf., ±20%, 400 v.
C117, C118	104179	Capacitor—Fixed, ceramic, 470 mmf., ±10%, 2000 v.
C119		Part of Yoke
C120A, B	104091	Capacitor—Fixed, electrolytic, 100/20 mf., 400/400 v. DC
C121A to C121C Incl.	102411	Capacitor—Fixed, electrolytic, 100/10/20/20 mf., 400/400/350/50 v. DC
C122	101000A	Capacitor—Fixed, paper, .01 mf., ±20%, 200 v. For KCS113E, F, K, P, R
C127	73473	Capacitor—Fixed, ceramic, 4700 mmf., +100 —0%, 500 v.
C130	73790	Capacitor—Fixed, paper, .039 mf., ±10%, 400 v.
C131, C132		Part of Yoke
C138	77293	Same as C107
C139	73815	Capacitor—Fixed, paper, .068 mf., ±20%, 1000 v.
C141	73815	Same as C139
F101	104295	Resistor—Fuse type
J102	100477	Socket—Deflection yoke female connector
L101	104087	Coil—Horizontal frequency
L102	104086	Coil—Width
L103 to L106 Incl.		Part of Yoke
L107	76640	Reactor—R.F. choke, 1.5 microhenries
L108	102638	Reactor—Filter choke
L110	102639	Coil—Peaking, 18 microhenries
P102		Part of Yoke
R101A, B	104092	Control—"On-Off" volume, picture control. Includes S101. For KCS113A, B
R101A, B	104294	Control—"On-Off" volume, contrast control. Includes S101. For KCS113E, F, P, R
R101A, B	104922	Control—Volume and picture control. For KCS113K
R101A, B	104923	Control—Volume and picture control. For KCS113H
R102	104834	Resistor—Fixed, wire wound, 1800 ohms, ±10%, 4 w. For KCS113A, B, E, F, P, R
R102	104926	Resistor—Fixed, wire wound, 1500 ohms, 4 w. For KCS113H, K
R103	502347	Resistor—Fixed, composition, 47,000 ohms, ±10%, ½ w. For KCS113E, F, K, P, R
R104	502610	Resistor—Fixed, composition, 10 megohms, ±5%, ½ w.
R105	502233	Resistor—Fixed, composition, 3300 ohms, ±10%, ½ w.
R106	104088	Control—Brightness
R107	100290	Control—Height
R108	502447	Resistor—Fixed, composition, 470,000 ohms, ±10%, ½ w.
R109	502482	Resistor—Fixed, composition, 820,000 ohms, ±10%, ½ w.
R110	104089	Control—Vertical hold
R111	502610	Same as R104
R112	102408	Control—Vertical linearity
R113	502468	Resistor—Fixed, composition, 680,000 ohms, ±10%, ½ w.
R114	512115	Resistor—Fixed, composition, 150 ohms, ±10%, 1 w.
R115	502047	Resistor—Fixed, composition, 47 ohms, ±20%, ½ w.
R116	104188	Resistor—Fixed, wire wound, 100 ohms, ±10%, 7 w.
R117	502422	Resistor—Fixed, composition, 220,000 ohms, ±10%, ½ w.
R118	502368	Resistor—Fixed, composition, 68,000 ohms, ±20%, ½ w.
R119	104835	Resistor—Fixed, film type, 4700 ohms, ±10%, 3 w.
R120	104181	Resistor—Fixed, wire wound, 0.39 ohms, ±10%, ½ w.
R121	502210	Resistor—Fixed, composition, 1000 ohms, ±20%, ½ w.
R122	502322	Resistor—Fixed, composition, 22,000 ohms, ±20%, ½ w.
R123	502247	Resistor—Fixed, composition, 4700 ohms, ±20%, ½ w.
R124, R125		Part of Yoke
R126	104187	Resistor—Fixed, wire wound, 4700 ohms, ±10%, 7 w.
R127	502410	Resistor—Fixed, composition, 100,000 ohms, ±10%, ½ w.
R128	502233	Resistor—Fixed, composition, 3300 ohms, ±20%, ½ w.
R131	502210	Resistor—Fixed, composition, 1000 ohms, ±10%, ½ w.
R132	512122	Resistor—Fixed, composition, 220 ohms, ±20%, 1 w.
R133		Part of Yoke
R146	104090	Control—Horizontal hold
R147	502410	Same as R127
R151	502482	Same as R109
S101		Part of R101A, B
S102	100029	Connector—2 contact male power input
T101	104193	Transformer—Audio output. For KCS113A, B, H
T101	100037	Transformer—Audio output. For KCS113E, F, K, P, R
T102	104085	Transformer—Vertical output
T103	104236	Transformer—High voltage
T104	104130	Transformer—Power. For KCS113A, B, E, F, P, R
T104	104921	Transformer—Power. For KCS113H, K
	104098	Bracket—On-Off volume control mounting. For KCS113A, B, H
	104093	Bracket—On-Off volume control bracket assembly. For KCS113E, F, K, P, R
	104925	Connector—4 contact female remote control connector. For KCS113H, K
	104924	Connector—11 contact female remote control connector and plug. For KCS113H, K
	104095	Disc—Horizontal hold control drive disc, 1.594" dia.
	104525	Holder—Fuse type resistor holder
	100306	Lead—Anode connector and lead assembly
	104182	Lead—I.F. link cable assembly
	104096	Retainer—"C" type for horizontal hold drive shaft
	104094	Shaft—Horizontal hold control disc drive shaft
	103112	Shield—Tube shield for high voltage socket assembly for V102
	104097	Shield—Volume control
	104183	Socket—Kinescope socket and lead assembly
	103113	Socket—Tube high voltage for V102
	31251	Socket—Tube octal for V101, V104
	68590	Socket—Tube octal for V103
		PW200—Printed Wiring Sound Assembly
C201		Part of T201
C202	102207	Capacitor—Fixed, ceramic, 56 mmf., ±10%, 500 v.
C203	73960	Capacitor—Fixed, ceramic, 10,000 mmf., +100 —0%, 500 v.
C204	104131	Capacitor—Fixed, ceramic, 2700 mmf., ±10%, 500 v.
C205	73960	Same as C203
C206, C207		Part of T202
C208, C209	73960	Same as C203
C210	104132	Capacitor—Fixed, ceramic, 10 mmf., ±10%, 500 v. N220
C211	104133	Capacitor—Fixed, paper, .047 mf., ±20%, 200 v.
C212	104134	Capacitor—Fixed, paper, .0022 mf., ±10%, 600 v. For KCS113A, B, H
C212	104323	Capacitor—Fixed, paper, .001 mf., ±20%, 600 v. For KCS113E, F, K, P, R
C213	104135	Capacitor—Fixed, ceramic, 680 mmf., ±10%, 500 v.
C214	73819	Capacitor—Fixed, paper, .0033 mf., ±10%, 1000 v. For KCS113A, B, H

SYMBOL NO.	STOCK NO.	DESCRIPTION
C214	73805	Capacitor—Fixed, paper, .0047 mf., ±10%, 1000 v. For KCS113E, F, K, P, R
C215	102231	Capacitor—Fixed, ceramic, 680 mmf., ±20%, 500 v.
PW200	104106	Circuit—Printed I.F. sound circuit less tubes. For KCS113A, B, H
PW200	104518	Circuit—Printed I.F. sound circuit less tubes. For KCS113E, F, K, P, R
R201	502347	Resistor—Fixed, composition, 47,000 ohms, ±20%, ½ w.
R202	502082	Resistor—Fixed, composition, 82 ohms, ±10%, ½ w.
R203, R204	502210	Resistor—Fixed, composition, 1000 ohms, ±20%, ½ w.
R205	522318	Resistor—Fixed, composition, 18,000 ohms, ±10%, 2 w.
R206	502156	Resistor—Fixed, composition, 560 ohms, ±10%, ½ w.
R207	502418	Resistor—Fixed, composition, 180,000 ohms, ±10%, ½ w.
R208	502447	Resistor—Fixed, composition, 470,000 ohms, ±10%, ½ w.
R209	502439	Resistor—Fixed, composition, 390,000 ohms, ±10%, ½ w.
R211	502127	Resistor—Fixed, composition, 270 ohms, ±10%, ½ w.
T201	104136	Transformer—Sound take-off
T202	104137	Transformer—C. W. driver
T203	104138	Coil—Quadrature, 4.5 M.C. trap
	73584	Shield—Tube shield
	101310	Socket—Tube, 7 pin for V201
	102643	Socket—Tube, 7 pin for V202
	102654	Socket—Tube, 7 pin for V203
		PW300—Printed Wiring Picture I-F Assembly
C301	102646	Capacitor—Fixed, ceramic, 18 mmf., ±5%, 500 v. NPO
C302, C303	73473	Capacitor—Fixed, ceramic, .0047 mf., +100 —0%, 500 v.
C304	78622	Capacitor—Fixed, ceramic, 470 mmf., ±20%, 500 v.
C305, C306	77252	Capacitor—Fixed, ceramic, .001 mf., +100 —0%, 500 v.
C307	73473	Same as C302
C308	78623	Capacitor—Fixed, ceramic, .001 mf., ±20%, 500 v.
C309, C310	73473	Same as C302
C311	104177	Capacitor—Fixed, ceramic, 7 mmf., ±0.5 mmf., 500 v. NPO
C312	78623	Same as C308
C313	104178	Capacitor—Fixed, ceramic, 5 mmf., ±0.5 mmf., 500 v. NPO
CR301	79985	Crystal—2nd detector
L301	104140	Coil—1st I.F. grid for boards marked 933152
L301	102649	Coil—1st I.F. grid for boards marked 933482
L302	104141	Coil—Grid trap for boards marked 933152
L302	102650	Coil—Grid trap for boards marked 933482
L303, L304		Part of PW300 (printed)
L305	102639	Coil—Peaking, 18 microhenries
L306	102894	Coil—I.F.—AGC
PW300	104107	Circuit—Printed I.F. pix. assembly less tubes. Includes L303, L304
R301	502347	Resistor—Fixed, composition, 47,000 ohms, ±5%, ½ w.
R302	502410	Resistor—Fixed, composition, 100,000 ohms, ±10%, ½ w.
R303	502047	Resistor—Fixed, composition, 47 ohms, ±5%, ½ w.
R304	502347	Same as R301
R305	502168	Resistor—Fixed, composition, 680 ohms, ±10%, ½ w.
R306	502415	Resistor—Fixed, composition, 150,000 ohms, ±5%, ½ w.
R307	502315	Resistor—Fixed, composition, 15,000 ohms, ±10%, ½ w.
R309	502168	Same as R305
R310	502118	Resistor—Fixed, composition, 180 ohms, ±5%, ½ w.
R311	502147	Resistor—Fixed, composition, 470 ohms, ±20%, ½ w.
R312	502415	Same as R306
T301 to T303 Incl.	104139	Transformer—1st, 2nd, 3rd I.F. pix. for boards marked 933152
T301 to T303 Incl.	101588	Transformer—1st, 2nd, 3rd I.F. pix. for boards marked 933482
	73584	Shield—Tube for V301, V302, V303
	102654	Socket—Tube, 7 pin for V301
	102643	Socket—Tube, 7 pin for V302, V303

SYMBOL NO.	STOCK NO.	DESCRIPTION
		PW400—Printed Wiring Video Assembly
C401	79251A	Capacitor—Fixed, paper, 0.1 mf., ±20%, 200 v.
C402	73960	Capacitor—Fixed, ceramic, 0.01 mf., +100 —0%, 500 v.
C403	79148A	Capacitor—Fixed, paper, 0.47 mf., ±20%, 200 v.
C404	100352	Capacitor—Fixed, ceramic, 27 mmf., ±5%, 500 v. NPO
C405	104148	Capacitor—Fixed, paper, 0.22 mf., ±20%, 600 v.
C406	73554	Capacitor—Fixed, paper, 0.027 mf., ±10%, 400 v.
C407, C408	102656	Capacitor—Fixed, mica, 330 mmf., ±10%, 500 v.
L401	100360	Coil—Peaking, 300 microhenries
L402	100358	Coil—4.5 M.C. trap
L403	100361	Coil—Peaking, 300 microhenries. Includes R408
L404	100362	Coil—Peaking, 510 microhenries
L405	100363	Coil—Peaking, 510 microhenries. Includes R410
PW400	104108	Circuit—Printed video circuit assembly less tubes
R401	502239	Resistor—Fixed, composition, 3900 ohms, ±5%, ½ w.
R402	502422	Resistor—Fixed, composition, 220,000 ohms, ±10%, ½ w.
R403	502468	Resistor—Fixed, composition, 680,000 ohms, ±10%, ½ w.
R404	502510	Resistor—Fixed, composition, 1 megohm, ±20%, ½ w.
R405	502222	Resistor—Fixed, composition, 2200 ohms, ±10%, ½ w.
R406	502333	Resistor—Fixed, composition, 33,000 ohms, ±10%, ½ w.
R407	512356	Resistor—Fixed, composition, 56,000 ohms, ±10%, 1 w.
R408		Part of L403
R409	502327	Resistor—Fixed, composition, 27,000 ohms, ±10%, ½ w.
R410		Part of L405
R411	502415	Resistor—Fixed, composition, 150,000 ohms, ±20%, ½ w.
R412	502456	Resistor—Fixed, composition, 560,000 ohms, ±10%, ½ w.
R413	522268	Resistor—Fixed, composition, 6800 ohms, ±10%, 2 w.
R414	502522	Resistor—Fixed, composition, 2.2 megohms, ±10%, ½ w.
R415	502427	Resistor—Fixed, composition, 270,000 ohms, ±10%, ½ w.
R416	502439	Resistor—Fixed, composition, 390,000 ohms, ±10%, ½ w.
R417	502512	Resistor—Fixed, composition, 1.2 megohms, ±10%, ½ w.
R418	502610	Resistor—Fixed, composition, 10 megohms, ±5%, ½ w.
R422	502382	Resistor—Fixed, composition, 82,000 ohms, ±10%, ½ w.
R423	522368	Resistor—Fixed, composition, 68,000 ohms, ±10%, 2 w.
R424	502482	Resistor—Fixed, composition, 820,000 ohms, ±10%, ½ w.
R426	502133	Resistor—Fixed, composition, 330 ohms, ±20%, ½ w.
	104184	Circuit—AGC totum tuner circuit board. Includes R422, R423, R424. Part of PW400
	100357	Socket—Tube, 9 pin for V401
		PW500—Printed Wiring Vertical Assembly
C501	104133	Capacitor—Fixed, paper, .033 mf., ±20%, 400 v.
C502	104144	Capacitor—Fixed, mica, 220 mmf., ±10%, 500 v.
C504	104906	Capacitor—Fixed, paper, .0056 mf., ±10%, 600 v.
C505	73788	Capacitor—Fixed, paper, .0056 mf., ±10%, 400 v.
C506	73920	Capacitor—Fixed, paper, .0047 mf., 600 v.
C507	79316	Capacitor—Fixed, paper, .01 mf., ±10%, 200 v.
C508	73790	Capacitor—Fixed, paper, .039 mf., ±10%, 400 v.
C509	79781	Capacitor—Fixed, paper, .012 mf., ±10%, 400 v.
C510	104145	Capacitor—Fixed, paper, .022 mf., ±20%, 600 v.
C511	104146	Capacitor—Fixed, paper, 0.15 mf., ±10%, 200 v.
C512	75345	Capacitor—Fixed, paper, .027 mf., ±10%, 600 v.

SYMBOL NO.	STOCK NO.	DESCRIPTION
C513	73849	Capacitor—Fixed, paper, .001 mf., ±20%, 1600 v.
PW500	103529	Circuit—Printed vertical circuit assembly less tubes
R501	502456	Resistor—Fixed, composition, 560,000 ohms, ±10%, ½ w.
R502	502233	Resistor—Fixed, composition, 3300 ohms, ±5%, ½ w.
R503	512310	Resistor—Fixed, composition, 10,000 ohms, ±10%, 1 w.
R504	502333	Resistor—Fixed, composition, 33,000 ohms, ±10%, ½ w.
R505	502382	Resistor—Fixed, composition, 82,000 ohms, ±10%, ½ w.
R506	502318	Resistor—Fixed, composition, 18,000 ohms, ±10%, ½ w.
R507	502568	Resistor—Fixed, composition, 6.8 megohms, ±10%, ½ w.
R508	502282	Resistor—Fixed, composition, 8200 ohms, ±10%, ½ w.
R509	502512	Resistor—Fixed, composition, 1.2 megohms, ±10%, ½ w.
R510	502322	Resistor—Fixed, composition, 22,000 ohms, ±10%, ½ w.
R511	502447	Resistor—Fixed, composition, 470,000 ohms, ±20%, ½ w.
R512	502318	Resistor—Fixed, composition, 18,000 ohms, ±5%, ½ w.
R513	502239	Resistor—Fixed, composition, 3900 ohms, ±10%, ½ w.
R515	512318	Resistor—Fixed, composition, 18,000 ohms, ±5%, 1 w.
	100301	Socket—Tube, 9 pin miniature for V501
	104142	Socket—Tube, 9 pin miniature for V502
		PW600—Printed Wiring Horizontal Assembly
C601	76474	Capacitor—Fixed, mica, 82 mmf., ±5%, 1000 v.
C602	76475	Capacitor—Fixed, mica, 68 mmf., ±5%, 1000 v.
C603	73551	Capacitor—Fixed, paper, 0.1 mf., ±20%, 400 v.
C604	103351A	Capacitor—Fixed, paper, .022 mf., ±20%, 400 v.
C605	79148A	Capacitor—Fixed, paper, 0.47 mf., ±20%, 200 v.
C606	104147	Capacitor—Fixed, mica, 470 mmf., ±5%, 1000 v.
C607	73594	Capacitor—Fixed, paper, .01 mf., ±5%, 600 v.
C608	76476	Capacitor—Fixed, mica, 330 mmf., ±10%, 1000 v.
C609	76995	Capacitor—Fixed, paper, .0012 mf., ±5%, 600 v.
L601	100300	Coil—Sine wave
PW600	104110	Circuit—Printed synchro guide circuit assembly less tubes
R601	502422	Resistor—Fixed, composition, 220,000 ohms, ±10%, ½ w.
R602	502433	Resistor—Fixed, composition, 330,000 ohms, ±10%, ½ w.
R603	502482	Resistor—Fixed, composition, 820,000 ohms, ±10%, ½ w.
R604	502410	Resistor—Fixed, composition, 100,000 ohms, ±5%, ½ w.
R605	502382	Resistor—Fixed, composition, 82,000 ohms, ±5%, ½ w.
R606	512412	Resistor—Fixed, composition, 120,000 ohms, ±5%, 1 w.
R607	502239	Resistor—Fixed, composition, 3900 ohms, ±10%, ½ w.
R609	502368	Resistor—Fixed, composition, 68,000 ohms, ±10%, ½ w.
R610	512347	Resistor—Fixed, composition, 47,000 ohms, ±10%, 1 w.
R611	502510	Resistor—Fixed, composition, 1.0 megohm, ±10%, ½ w.
R612	502510	Resistor—Fixed, composition, 1 megohm, ±10%, ½ w.
	100298	Socket—Tube, 9 pin miniature for V601
		YOKE & MAGNET ASSEMBLY
C119	103535	Capacitor—Fixed, ceramic, 91 mmf., ±10%, 2500 v. DC
C131, C132	103536	Capacitor—Fixed, ceramic, 120 mmf., ±10%, 2500 v. DC
P102	51209	Connector—8 contact male deflection yoke connector
R124, R125	502115	Resistor—Fixed, composition, 150 ohms, ±10%, ½ w.
	104409	Clamp—Tube clamp for centering magnet
	104077	Magnet—Centering magnet and cap assembly
	74936	Spring—Yoke lead retaining spring
	104078	Yoke—Deflection yoke assembly. Includes: C119, C131, C132, L103 to L106 Incl., P102, R124, R125
		SPEAKER ASSEMBLY 972308-2
	79696	Speaker—4" P.M. speaker assembly complete with cone and voice coil (3.2 ohms). For Models 21RT8202, 21T8202 & U, 21T8205 & U, 21T8207 & U
		SPEAKER ASSEMBLY 971636-1
	77000	Speaker—5" P.M. speaker assembly complete with cone and voice coil. For Models 21T8265 & U, 21T8267 & U
		SPEAKER ASSEMBLY 92586-4 or 92586-9
	74664	Speaker—8" P.M. speaker assembly complete with cone and voice coil. For Models 21RT8425, 21T8375 & U, 21T8376 & U, 21T8377 & U, 21T8395 & U, 21T8397 & U, 21T8405 & U, 21T8407 & U, 21T8425 & U, 21T8426 & U, 21T8427 & U, 21T8428 & U, 21T8445 & U, 21T8447 & U, 21T8448 & U, 21T8485 & U, 21T8486 & U, 21T8487 & U
		SPEAKER ASSEMBLY 961402-1
	101182	Speaker—6" x 9" P.M. speaker assembly complete with cone and voice coil (3.2 ohms). For Models 21T8465 & U, 21T8466 & U, 21T8467 & U, 21T8468 & U
		MISCELLANEOUS
	104066	Back—T.V. cabinet back assembly less kinescope cover for Models 21T8202 & U, 21T8205 & U, 21T8207 & U, 21T8265 & U, 21T8267 & U
	104953	Back—T.V. cabinet back assembly for Model 21RT8202
	104598	Back—T.V. cabinet back assembly for Models 21T8375 & U, 21T8376 & U, 21T-8377 & U, 21T8395 & U, 21T8397 & U, 21T8405 & U, 21T8407 & U
	104245	Back—T.V. cabinet back assembly for Models 21T8425 & U, 21T8426 & U, 21T-8427 & U, 21T8428 & U, 21T8445 & U, 21T8447 & U, 21T8448 & U, 21T8485 & U, 21T8486 & U, 21T8487 & U
	104952	Back—T.V. cabinet back assembly for Model 21RT8425
	104246	Back—T.V. cabinet back assembly for Models 21T8465 & U, 21T8466 & U, 21T-8467 & U, 21T8468 & U
	104083	Baffle—Speaker baffle and cloth assembly for ebony Models 21RT8202, 21T8202 & U
	104084	Baffle—Speaker baffle and cloth assembly for oak grain Models 21T8205 & U, 21T-8207 & U
	102373	Baffle—Speaker baffle and cloth assembly for walnut grain and oak grain Models 21T8266 & U, 21T8267 & U
	102372	Baffle—Speaker baffle and cloth assembly for mahogany grain Models 21T8265 & U
	X3821	Base—Wood swivel base assembly — mahogany for Models 21T8395 & U
	X3822	Base—Wood swivel base assembly — oak for Models 21T8397 & U
	X3780	Base—Wood swivel base assembly — mahogany grain for Models 21T8485 & U
	X3843	Base—Wood swivel base assembly—walnut grain for Models 21T8486 & U
	X3781	Base—Wood swivel base assembly — oak grain for Models 21T8487 & U
	104250	Bumper — Kinescope mounting strap bumper (4 req'd) for strap 104248
	Z4129	Cabinet—Metal cabinet assembly—ebony —for Models 21RT8202, 21T8202 & U
	Z4130	Cabinet—Metal cabinet less swivel stand assembly—mahogany grain—for Models 21T8205 & U, 21T8265 & U
	Z4131	Cabinet—Metal cabinet less swivel stand assembly—oak grain—for Models 21T-8207 & U, 21T8267 & U

SYMBOL NO.	STOCK NO.	DESCRIPTION
	M4202	Cabinet—Masonite cabinet assembly — mahogany grain—for Models 21T8375 & U
	M4213	Cabinet—Masonite cabinet assembly — walnut grain—for Models 21T8376 & U
	M4203	Cabinet—Masonite cabinet assembly—oak grain—for Models 21T8377 & U
	M4204	Cabinet—Masonite cabinet and swivel assembly—mahogany grain—for Models 21T8395 & U
	M4205	Cabinet—Masonite cabinet nad swivel assembly—oak grain—for Models 21T8397 & U
	M4206	Cabinet—Masonite cabinet assembly with casters—mahogany grain — for Models 21T8405 & U
	M4207	Cabinet—Masonite cabinet assembly with casters—oak grain—for Models 21T8407 & U
	M4147	Cabinet—Masonite cabinet assembly — mahogany grain—for Models 21RT8425, 21T8425 & U
	M4148	Cabinet—Masonite cabinet assembly — walnut grain—for Models 21T8426 & U
	M4149	Cabinet—Masonite cabinet assembly—oak grain—for Models 21T8427 & U
	M4201	Cabinet—Masonite cabinet assembly — birch grain—for Models 21T8428 & U
	M4208	Cabinet—Masonite cabinet assembly — mahogany grain—for Models 21T8445 & U
	M4209	Cabinet—Masonite cabinet assembly—oak grain—for Models 21T8447 & U
	M4210	Cabinet—Masonite cabinet assembly — birch grain—for Models 21T8448 & U
	M4152	Cabinet—Masonite cabinet assembly — mahogany grain—for Models 21T8465 & U
	M4153	Cabinet—Masonite cabinet assembly — walnut grain—for Models 21T8466 & U
	M4154	Cabinet—Masonite cabinet assembly—oak grain—for Models 21T8467 & U
	M4214	Cabinet—Masonite cabinet assembly — birch grain—for Models 21T8468 & U
	M4150	Cabinet—Masonite cabinet and swivel stand assembly—mahogany grain—for Models 21T8485 & U
	M4212	Cabinet—Masonite cabinet and swivel stand assembly — walnut grain — for Models 21T8486 & U
	M4151	Cabinet—Masonite cabinet and swivel stand assembly—oak grain—for Models 21T8487 & U
	104601	Caster—Cabinet caster assembly for Models 21T8405 & U, 21T8407 & U
	104251	Clamp—Safety glass clamp assembly (4 req'd) for glass 104252
	104308	Clip—Safety glass clamp assembly locking clip (4 req'd) for glass 104252
	X3819	Cloth—Cabinet grille cloth for Models 21T8375 & U, 21T8376 & U, 21T8377 & U, 21T8395 & U, 21T8397 & U, 21T8405 & U, 21T8407 & U
	X3788	Cloth—Cabinet grille cloth for Models 21RT8425, 21T8425 & U, 21T8426 & U, 21T8427 & U, 21T8428 & U
	X3787	Cloth—Cabinet grille cloth for Models 21T8445 & U, 21T8447 & U, 21T8448 & U, 21T8486 & U, 21T8487 & U
	X3474	Cloth—Cabinet grille cloth for Models 21T8465 & U, 21T8466 & U, 21T8467 & U, 21T8468 & U
	X3786	Cloth—Cabinet grille cloth for Models 21T8485 & U
	71457	Cord—Power cord and plug
	103994	Cover—Hidden control cover—black—for Models 21RT8202, 21T8202 & U
	104519	Cover—Hidden control cover—mahogany grain—for Models 21T8205 & U, 21T8265 & U
	103995	Cover—Hidden control cover — toast oak grain—for Models 21T8207 & U, 21T8267 & U
	104242	Cover—Hidden control cover and case assembly—mahogany—for Models 21RT-8425, 21T8375 & U, 21T8395 & U, 21T8405 & U, 21T8425 & U, 21T8445 & U, 21T8465 & U, 21T8485 & U
	104244	Cover—Hidden control cover and case assembly—oak—for Models 21T8377 & U, 21T8397 & U, 21T8407 & U, 21T8427 & U, 21T8447 & U, 21T8467 & U, 21T8487 & U
	104243	Cover—Hidden control cover and case assembly—walnut—for Models 21T8376 & U, 21T8426 & U, 21T8466 & U, 21T8486 & U
	104600	Cover—Hidden control cover and case assembly—birch—for Models 21T8428 & U, 21T8448 & U, 21T8468 & U
	104249	Cushion—Kinescope mounting strap cushion (6 req'd) for strap 104248
	100957	Cushion—Safety glass bottom cushion
	101221	Cushion—Safety glass side cushion for glass 104252
	102458	Cushion—Safety glass top cushion
	100952	Cushion—Safety glass top and bottom cushion for glass 104252
	104588	Decalcomania—Control marker for mahogany grain, walnut grain Models 21RT8425, 21T8375 & U, 21T8376 & U, 21T8395 & U, 21T8405 & U, 21T8425 & U, 21T8426 & U, 21T8445 & U, 21T8465 & U, 21T8466 & U, 21T8485 & U
	104589	Decalcomania—Control marker for oak grain Models 21T8377 & U, 21T8397 & U, 21T8407 & U, 21T8427 & U, 21T8428 & U, 21T8447 & U, 21T8448 & U, 21T8467 & U, 21T8468 & U, 21T8486 & U, 21T8487 & U
	104239	Ferrule—Cabinet leg ferrule — brass—for Models 21T8485 & U, 21T8486 & U, 21T-8487 & U
	103480	Flange—Cabinet leg mounting flange for Models 21T8445 & U, 21T8447 & U, 21T-8448 & U, 21T8465 & U, 21T8466 & U, 21T8467 & U, 21T8468 & U
	79537	Foot—Cabinet foot—black felt—(4 req'd) —for Models 21RT8202, 21T8202 & U, 21T8205 & U, 21T8207 & U
	104079	Glass—Safety glass for Models 21RT8202, 21T8202 & U, 21T8205 & U, 21T8207 & U, 21T8265 & U, 21T8267 & U, 21T8375 & U, 21T8376 & U, 21T8377 & U, 21T8395 & U, 21T8397 & U, 21T8405 & U, 21T8407 & U
	104252	Glass—Safety glass for Models 21RT8425, 21T8425 & U, 21T8426 & U, 21T8427 & U, 21T8428 & U, 21T8445 & U, 21T8447 & U, 21T8448 & U, 21T8465 & U, 21T8466 & U, 21T8467 & U, 21T8468 & U, 21T8485 & U, 21T8486 & U, 21T8487 & U
	X3887	Grille—Cabinet wood grille — mahogany finish — for mahogany grain Models 21T8445 & U
	X3888	Grille—Cabinet wood grille—oak finish—for oak grain Models 21T8447 & U
	X3889	Grille—Cabinet wood grille—birch finish —for birch grain Models 21T8448 & U
	X3834	Grille—Cabinet wood grille — mahogany finish—for mahogany grain Models 21T-8465 & U
	X3835	Grille—Cabinet wood grille—walnut finish—for walnut grain Models 21T8466 & U
	X3836	Grille—Cabinet wood grille—buff finish—for oak grain Models 21T8467 & U
	X3837	Grille—Cabinet wood grille—birch finish —for birch grain Models 21T8468 & U
	X3778	Grille—Cabinet wood grille — mahogany finish—for mahogany grain Models 21T-8485 & U
	X3842	Grille—Cabinet wood grille—walnut finish—for walnut grain Models 21T8486 & U
	X3779	Grille—Cabinet wood grille—oak finish—for oak grain Models 21T8487 & U
	102581	Knob—Brightness, vertical hold and tone control—maroon
	104400	Knob—Contrast control — maroon — for ebony Models 21RT8202 & 21T8202 & U
	104386	Knob—Contrast control — wine — for mahogany grain Models 21RT8425, 21T8205 & U, 21T8265 & U, 21T8375 & U, 21T8395 & U, 21T8405 & U, 21T8425 & U, 21T8445 & U, 21T8465 & U, 21T8485 & U
	104395	Knob—Contrast control—taupe—for walnut grain, oak grain Models 21T8207 & U, 21T8267 & U, 21T8376 & U, 21T8377 & U, 21T8397 & U, 21T8407 & U, 21T8426 & U, 21T8427 & U, 21T8447 & U, 21T8466 & U, 21T8467 & U, 21T8486 & U, 21T8487
	104396	Knob—Contrast control—mocha—for birch grain Models 21T8428 & U, 21T8448 & U, 21T8468 & U
	100620B	Knob—"On-Off" volume — maroon — for ebony Models 21RT8202 & 21T8202 & U
	101138B	Knob—"On-Off" volume—wine—for mahogany grain Models 21RT8425, 21T8205 & U, 21T8265 & U, 21T8375 & U, 21T8395 & U, 21T8405 & U, 21T8425 & U, 21T8445 & U, 21T8465 & U, 21T8485 & U

SYMBOL NO.	STOCK NO.	DESCRIPTION
	100621B	Knob—"On-Off" volume—taupe—for walnut grain, oak grain Models 21T8207 & U, 21T8267 & U, 21T8376 & U, 21T8377 & U, 21T8397 & U, 21T8407 & U, 21T8426 & U, 21T8427 & U, 21T8447 & U, 21T8466 & U, 21T8467 & U, 21T8486 & U, 21T8487 & U
	101140B	Knob—"On-Off" volume — mocha — for birch grain Models 21T8428 & U, 21T8448 & U, 21T8468 & U
	*104076	Knob—UHF dial knob — maroon — for ebony Model 21T8202U for Tuner KRK64A
	*104522	Knob—UHF dial knob — maroon — for ebony Model 21T8202U for Tuner KRK-64A-M1
	*104074	Knob—UHF dial knob—wine—for mahogany grain Models 21T8205U, 21T8265U, 21T8375U, 21T8395U, 21T8405U, 21T8425U, 21T8445U, 21T8465U, 21T8485U for Tuner KRK64A
	*104520	Knob—UHF dial knob—wine—for mahogany grain Models 21T8205U, 21T8265U, 21T8375U, 21T8395U, 21T8405U, 21T8425U, 21T8445U, 21T8465U, 21T8485U for Tuner KRK64A-M1
	*104075	Knob—UHF dial knob—gray—for walnut grain, oak grain, birch grain Models 21T8207U, 21T8267U, 21T8376U, 21T8377U, 21T8397U, 21T8407U, 21T8426U, 21T8427U, 21T8428U, 21T8447U, 21T8448U, 21T8466U, 21T8467U, 21T8468U, 21T8486U, 21T8487U for Tuner KRK64A
	*104521	Knob—UHF dial knob—gray—for walnut grain, oak grain, birch grain Models 21T8207U, 21T8267U, 21T8376U, 21T8377U, 21T8397U, 21T8407U, 21T8426U, 21T8427U, 21T8428U, 21T8447U, 21T8448U, 21T8466U, 21T8467U, 21T8468U, 21T8486U, 21T8487U for Tuner KRK64A-M1
	104073	Knob—UHF tuning — maroon — for ebony Model 21T8202U
	104071	Knob—UHF tuning—wine—for mahogany grain Models 21T8205U, 21T8265U, 21T-8375U, 21T8395U, 21T8405U, 21T8425U 21T8445U, 21T8465U, 21T8485U
	104072	Knob—UHF tuning — taupe — for walnut grain, oak grain Models 21T8207U, 21T-8267U, 21T8376U, 21T8377U, 21T8397U, 21T8407U, 21T8426U, 21T8427U, 21T8447U, 21T8466U, 21T8467U, 21T8486U, 21T8487U
	104405	Knob—UHF tuning — mocha — for birch grain Models 21T8428U, 21T8448U, 21T-8468U
	104069	Knob—VHF channel selector — maroon — for ebony Models 21RT8202, 21T8202
	104304	Knob—VHF channel selector—wine—for mahogany grain Models 21RT8425, 21T-8205, 21T8265, 21T8375, 21T8395, 21T8405, 21T8425, 21T8445, 21T8465, 21T8485
	104303	Knob—VHF channel selector—taupe — for walnut grain, oak grain Models 21T8207, 21T8267, 21T8376, 21T8377, 21T8397, 21T-8407, 21T8426, 21T8427, 21T8447, 21T8466, 21T8467, 21T8486, 21T8487
	104597	Knob—VHF channel selector—mocha—for birch grain Models 21T8428, 21T8448, 21T8468
	104070	Knob—VHF/UHF channel selector — maroon—for ebony Model 21T8202U
	104305	Knob—VHF/UHF channel selector — wine —for mahogany grain Models 21T8205U, 21T8265U, 21T8375U, 21T8395U, 21T8405U, 21T8425U, 21T8445U, 21T8465U, 21T8485U
	104306	Knob—VHF/UHF channel selector—taupe —for walnut grain, oak grain Models 21T8207U, 21T8267U, 21T8376U, 21T8377U, 21T8397U, 21T8407U, 21T8426U, 21T8427U, 21T8447U, 21T8466U, 21T8467U, 21T8486U, 21T8487U
	104596	Knob—VHF/UHF channel selector—mocha —for birch grain Models 21T8428U, 21T-8448U, 21T8468U
	104401	Knob—VHF and UHF fine tuning—maroon —for ebony Models 21RT8202, 21T8202 & U
	104397	Knob—VHF and UHF fine tuning — wine—for mahogany grain Models 21RT8425, 21T8205 & U, 21T8265 & U, 21T-8375 & U, 21T8395 & U, 21T8405 & U, 21T8425 & U, 21T8445 & U, 21T8465 & U, 21T8485 & U
	104398	Knob—VHF and UHF fine tuning—taupe—for walnut grain, oak grain Models 21T-8207 & U, 21T8267 & U, 21T8376 & U, 21T-8377 & U, 21T8397 & U, 21T8407 & U, 21T8426 & U, 21T8427 & U, 21T8447 & U, 21T8466 & U, 21T8467 & U, 21T8486 & U, 21T8487 & U
	104399	Knob—VHF and UHF fine tuning—mocha —for birch grain Models 21T8428 & U, 21T8448 & U, 21T8468 & U
	Z3695	Leg—Cabinet leg—for mahogany grain, oak grain Models 21T8265 & U, 21T8267 & U
	Z3886	Leg—Cabinet leg assembly—brass enamel —for Models 21T8445 & U, 21T8447 & U 21T8448 & U
	X3838	Leg—Cabinet leg assembly—mahogany—for Models 21T8465 & U
	X3839	Leg—Cabinet leg assembly—walnut—for Models 21T8466 & U
	X3840	Leg—Cabinet leg assembly — oak — for Models 21T8467 & U
	X3841	Leg—Cabinet leg assembly — birch — for Models 21T8468 & U
	104235	Mask—Kinescope mask high impac polystyrene for Models 21RT8202, 21T8202 & U, 21T8205 & U, 21T8207 & U, 21T8265 & U, 21T8267 & U, 21T8375 & U, 21T8376 & U, 21T8377 & U, 21T8395 & U, 21T8397 & U, 21T8405 & U, 21T8407 & U
	104247	Mask—Kinescope mask assembly (metal) for Models 21RT8425, 21T8425 & U, 21T-8426 & U, 21T8427 & U, 21T8428 & U, 21T8445 & U, 21T8447 & U, 21T8448 & U, 21T8465 & U, 21T8466 & U, 21T8467 & U, 21T8468 & U, 21T8485 & U, 21T8486 & U, 21T8487 & U
	101302	Motif—"Super" ornament for Models 21RT8425, 21T8367 & U, 21T8375 & U, 21T8376 & U, 21T8395 & U, 21T8405 & U, 21T8425 & U, 21T8426 & U, 21T8465 & U, 21T8466 & U, 21T8485 & U
	101303	Motif—"Super" ornament for Models 21T8377 & U, 21T8397 & U, 21T8407 & U, 21T8427 & U, 21T8428 & U, 21T8445 & U, 21T8447 & U, 21T8448 & U, 21T8467 & U, 21T8468 & U, 21T8486 & U, 21T8487 & U
	77033	Nameplate—"RCA Victor" for Models 21RT8425, 21T8375 & U, 21T8376 & U, 21T8395 & U, 21T8405 & U, 21T8425 & U, 21T8426 & U, 21T8445 & U, 21T8447 & U, 21T8448 & U, 21T8465 & U, 21T8466 & U, 21T8485 & U
	100982	Nameplate—"RCA Victor" for Models 21T8377 & U, 21T8397 & U, 21T8407 & U, 21T8427 & U, 21T8428 & U, 21T8467 & U, 21T8468 & U, 21T8486 & U, 21T8487 & U
	104067	Network—Antenna cross over network
	74712	Nut—Kine mask mounting nut (4 req'd)
	77013	Nut—Push on type for "V" shaped ornament
	104241	Ornament—"V" shaped cabinet ornament
	Z3767	Pan—Cabinet swivel pan — mahogany, oak grain for Models 21T8265 & U, 21T-8267 & U
	104082	Retainer—Safety glass bottom retainer for glass 104079
	104081	Retainer—Safety glass side retainer for glass 104079
	104523	Retainer—Safety glass side retainer for glass 104252
	104080	Retainer—Safety glass top retainer for glass 104079
	104307	Retainer—Safety glass top and bottom retainer for glass 104252
	104602	Sleeve—Caster socket sleeve for Models 21T8405 & U, 21T8407 & U
	102669	Spacer—Kinescope mounting spacer black phenolic (L.H.) for strap 102667
	102668	Spacer—Kinescope mounting spacer black phenolic (R.H.) for strap 102667
	78324	Spring—Cabinet back retaining
	103996	Spring—Hidden control cover and case assembly spring
	103504	Spring—Kinescope strap mounting spring (2 req'd) for strap 102667

REPLACEMENT PARTS (Continued)

SYMBOL NO.	STOCK NO.	DESCRIPTION
	78871	Spring—Kinescope mounting strap tension spring (2 req'd) for strap 104248
	30330	Spring—Knob retaining for knobs 100620-B, 100621-B, 101138-B, 101140-B
	74734	Spring—Knob retaining for knob 102581
	102582	Spring—Knob retaining for knobs 104069, 104070, 104303, 104304, 104305, 104306, 104596, 104597
	76837	Spring—Knob retaining for knobs 104071, 104072, 104073, 104386, 104395, 104396, 104400, 104405
	73914	Spring—Knob retaining for knobs 104074, 104075, 104076
	72845	Spring—Knob retaining for knobs 104397, 104398, 104399, 104401, 104520, 104521, 104522
	102667	Strap—Kinescope mounting strap assembly for Models 21RT8202, 21T8202 & U, 21T8205 & U, 21T8207 & U, 21T8265 & U, 21T8267 & U, 21T8375 & U, 21T8376 & U, 21T8377 & U, 21T8395 & U, 21T8397 & U, 21T8405 & U, 21T8407 & U
	104248	Strap—Kinescope mounting strap and bracket assembly for Models 21RT8425, 21T8425 & U, 21T8426 & U, 21T8427 & U, 21T8428 & U, 21T8445 & U, 21T8447 & U, 21T8448 & U, 21T8465 & U, 21T8466 & U, 21T8467 & U, 21T8468 & U, 21T8485 & U, 21T8486 & U, 21T8487 & U

SYMBOL NO.	STOCK NO.	DESCRIPTION
	104240	Strip—Brass cabinet strip wood filled for Models 21RT8425, 21T8425 & U, 21T8426 & U, 21T8427 & U, 21T8428 & U
	104951	Strip—Brass cabinet strip, 24 5/16" long — for Models 21T8445 & U, 21T8447 & U, 21T8448 & U
	104238	Strip—Brass cabinet strip wood filled for Models 21T8485 & U, 21T8486 & U, 21T-8487 & U
	Z3768	Swivel—Cabinet swivel assembly — for Models 21T8265 & U, 21T8267 & U, 21T-8485 & U, 21T8486 & U, 21T8487 & U
	Z3820	Swivel—Cabinet swivel assembly — for Models 21T8395 & U, 21T8397 & U
	104068	Terminal—Cabinet back antenna terminal clip
		*KRK64A-M1 Tuners may be identified, by the red or orange paint on the face of the UHF tuning shaft, without removing the chassis to find the M1 stamping — KRK64A tuners do not have paint markings on the shaft.

21-RT-8202
21-T-8202U
SERIES

FIELD SERVICE DATA SHEET

REMOTE CONTROL MODELS

Models 21-RT-8202 and 21-RT-8425 are equipped for remote control operation. The receiver is turned on by pressing the "On-off" switch on top of the receiver or on the remote control unit. Channels are selected automatically in sequence by momentarily pressing the channel selector switch on the receiver or at the remote location. The channels received will be determined by the presetting of the thirteen switches of S151, the remote control selector switch, located on the back of the receiver.

To provide automatic selection of the channels in a particular location, slide the switches to uncover the numbers of the channels to be received.

In addition to the automatic selection of channels, the channel selector may be operated manually at any time.

The volume of sound may be controlled locally or by means of the volume control on the remote control unit. It should be noted, however, that full control of the sound level is obtained when the unused volume control is first turned to maximum.

WIDTH, HORIZONTAL DRIVE AND SINEWAVE ADJUSTMENTS

A. Set width coil fully counter-clockwise.

B. Adjust drive for overdrive line then clockwise until line just disappears. If no line appears set fully counter-clockwise.

C. Adjust width for ¾" overscan at each side, with normal line voltage and normal brightness. Repeat Step B.

D. Turn horizontal hold control to the left, out of sync, to the point where interrupted oscillation occurs.

E. Adjust sinewave core, as the horizontal hold control is rotated to the left beyond the locked-in position, until 3 to 4 bars occur between the fall out point and interrupted oscillation.

KINESCOPE AND SAFETY GLASS CLEANING

The front safety glass may be removed to allow for cleaning of the kinescope faceplate and the safety glass if required.

Table models have a "U" shaped channel under the front top edge of the cabinet, in front of the top of the safety glass. Take out the screws holding the channels and remove the channel and safety glass.

Console models have a "U" shaped channel in front of the top edge of the safety glass and also at the bottom edge. Pry off the top and bottom channels starting at the extreme ends.

Insert the blade of a small screwdriver in one of the vertical slots in the middle of a retainer at the top of the safety glass. Slide the bar to the right to release the retainer.

The bottom retainers are removed in a similar manner except the slide bar is moved to the left.

The Kinescope faceplate and the safety glass should only be cleaned with a soft cloth and "Windex" or similar cleaning agent.

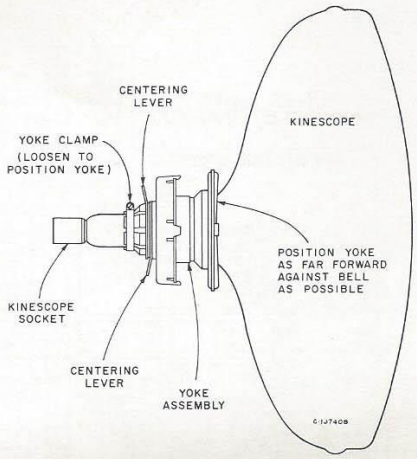

YOKE AND MAGNET ADJUSTMENTS

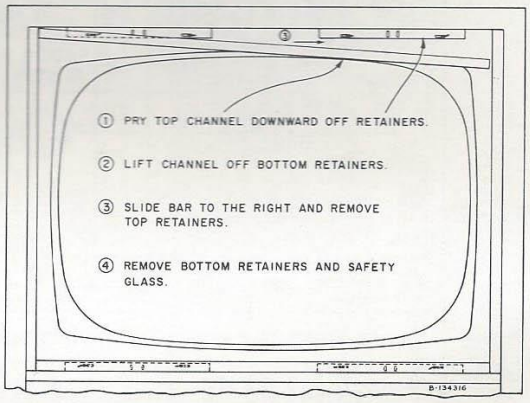

SAFETY GLASS REMOVAL

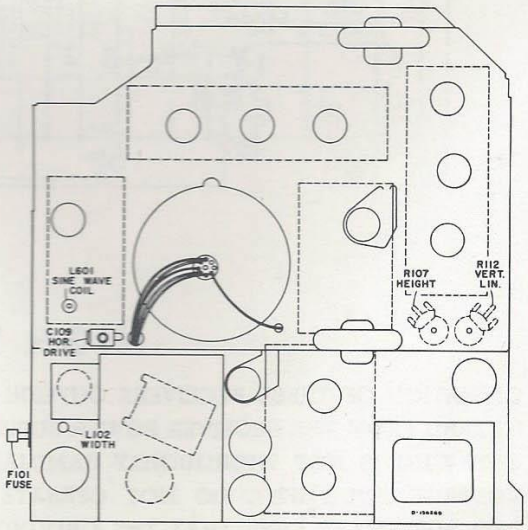

REAR ADJUSTMENTS