SERVICE BULLETIN

PHILIPS INDUSTRIES LTD.
TORONTO - MONTREAL - WINNIPEG
HALIFAX - VANCOUVER

ROGERS MAJESTIC
RADIO CORPORATION LTD.
TORONTO - MONTREAL

T.V.B. 5 - 55

P-3521 - R-7521

For information refer to Service Manual for P-342, R-742 series with the exception of the following differences:

TO CLEAN FACE OF PICTURE TUBE

1. Loosen the two set screws on the bottom of the lower ornamental strip.
2. Slide window panel out sideways.
3. Clean face of the picture tube and back of the window panel.
4. Replace window panel by sliding it in sideways and tighten the two set screws.
5. Clean face of the window panel.

WARNING: The safety window panel must always be replaced.

INSTALLING AND ADJUSTING THE PICTURE TUBE

Model Number	Face of tube to Face of Chassis	Bottom of tube to Top of Chassis	Center of neck at rear to Bottom of Chassis
P3521,R7521	1-7/8"	5/8"	11-15/16"

CABINET PARTS

330-595	Back Cover
030-639	Cabinet 17" Table, Black Ermine
030-640	Cabinet 17" Table, Blonde
332-734	Mask, 17" Picture Tube
332-756	Panel Window, 17" (Tinted)
332-740	Glass Retaining Strip, Top
332-739	Glass Retaining Strip, Bottom
041-156	Speaker 5" P.M.

SERVICE DATA

TELEVISION RECEIVERS

MODELS P342, P344, P345, P346, P347
R742, R744, R745, R746, R747

P3520


P342


P344


P345


P346


P347


R742


R744


R745


R746


R747

COMPILED AND PUBLISHED BY

ROGERS MAJESTIC
RADIO CORPORATION LTD.
TORONTO - MONTREAL

PHILIPS INDUSTRIES LTD.
TORONTO - MONTREAL - WINNIPEG
HALIFAX - VANCOUVER

GENERAL INFORMATION

Model	Type	No. Tubes	Picture Tubes	General
P-342	Table	20	17" Spherical	
R-742	Table	20	17" Spherical	
P-344	Console	20	17" Spherical	
R-744	Console	20	17" Spherical	
P-345	Console	20	21" Spherical	Removable window panel
R-745	Console	20	21" Spherical	Removable window panel
P-346	Table	20	21" Spherical	Removable window panel
R-746	Table	20	21" Spherical	Removable window panel
P-347	Console with doors	20	21" Spherical	Removable window panel
R-747	Console with doors	20	21" Spherical	Removable window panel

TELEVISION ANTENNA CONNECTIONS

An antenna that is satisfactory for strong local signals, in the absence of severe reflections, is built into the cabinet. This antenna also functions as the radiation shield, and must be connected to the ground terminal beneath the antenna terminal when not used as the antenna.

If an external antenna is used, it should match the receiver's input impedance of 300 ohms.

DISCONNECT THE BUILT-IN ANTENNA WHEN USING THE EXTERNAL ANTENNA AND GROUND IT TO THE TERMINAL BENEATH THE ANTENNA TERMINALS.

TUBE COMPLEMENT

V1	6BQ7A	R-F Amplifier
V2	6U8	Mixer and Oscillator
V3	6CB6	1st Video I-F
V4	6CB6	2nd Video I-F
V5	6CB6	3rd Video I-F
V6	12BY7	Video Output
V7	6AU6	Sound I-F Amplifier
V8	6AL5	Ratio Detector
V9	6AT6	Audio Amplifier
V10	6W6GT	Audio Output
V11	12AU7	1st and 2nd Sync Separator
V12	12AU7	Sync Lim and Vertical Oscillator
V13	6S4	Vertical Output
V14	6SN7GT	Horizontal Control and Oscillator
V15	6BQ6GTA	Horizontal Output
V16	6R3 or 6V3A	Damper and Booster Rectifier
V17	1B3GT	H-V Rectifier
V18	6W4GT	B + Rectifier
V19	6W4GT	B + Rectifier
V20	17HP4B	17" Picture Tube
	or 21YP4A	21" Picture Tube

TELEVISION CONTROLS

FRONT

Function	Knob
Contrast	Outer
Off/On Volume	Inner
Vertical Hold	Outer
Horizontal Hold	Inner
Brilliance	Outer
Range Finder	Inner
Fine Tuning	Outer
Channel Selector	Inner

REAR

Function	Description
Vertical Linearity	Knurled Shaft
Height	Knurled Shaft
Width	Slider
Horizontal Range	Lower Slotted Screw
Horizontal Phase	Upper Slotted Screw
Ion Trap	On Neck of Picture Tube
Centering Device	Two levers on Yoke
Picture Levelling	Thumb Screw on Yoke Assem.

HIGH VOLTAGE WARNING

Operation of the receiver chassis outside of the cabinet involves a shock hazard. The High Voltage supply, while of low current capacity, operates up to 15,000 volts potential. Exercise all normal high Voltage precautions while working on this equipment.

BLOCK DIAGRAM

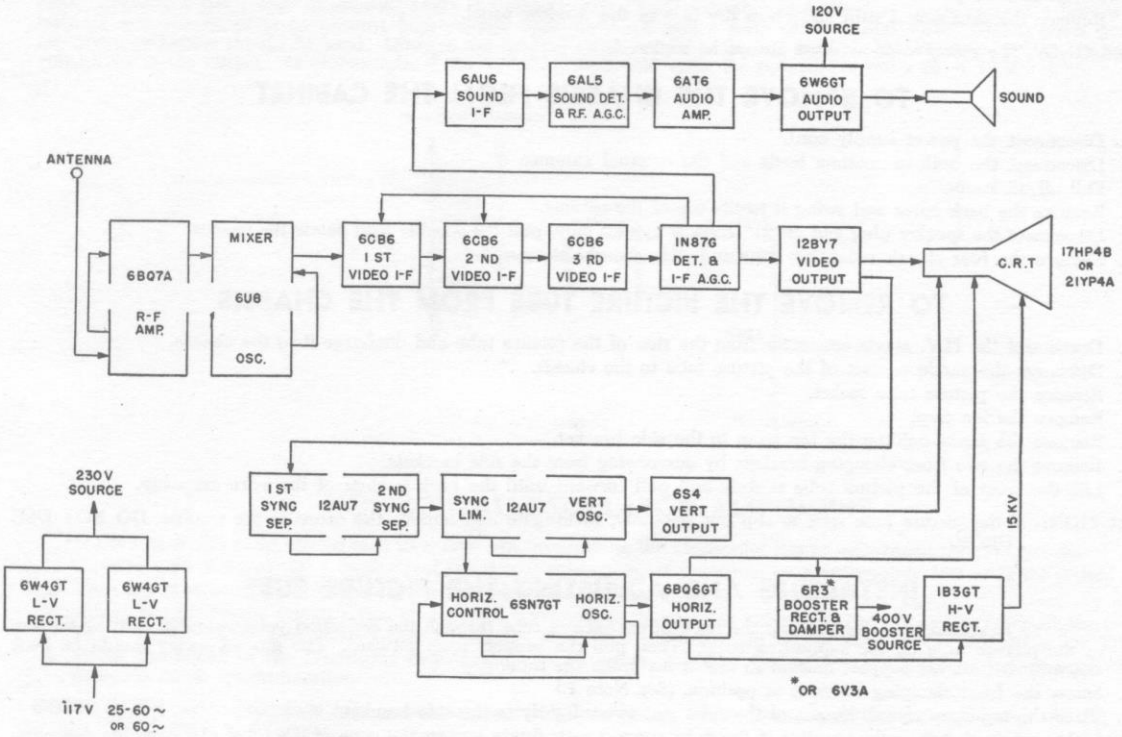

PICTURE TUBE WARNING

The picture tube envelope encloses a high vacuum and with the large surface area of glass involved, the stresses created are considerable. Any accidental blow or rough handling may cause the tube to implode with extreme violence. The picture tube should be handled only by qualified persons protected by heavy gloves and shatterproof goggles.

Always handle the picture tube by the front rim, never by the neck. Always set the picture tube face down on a piece of thick, soft paper or cloth.

SERVICE ADJUSTMENTS

The service adjustments normally will require occasional minor adjustments if any circuit work or tube replacement is required. A test pattern, generated locally in the shop, or obtained from a television station is recommended for best results. The operating and auxiliary controls on the front panel should be adjusted to give the best possible picture before making the following adjustments:

Centering the picture — Remove the back cover and adjust the two rings on the centering device until the picture is recentered. If any difficulty is encountered check that the neck of the picture tube is centered in the deflection yoke and adjust if necessary.

Levelling the picture — Loosen the thumb screw on the deflection yoke assembly and rotate the yoke until picture is level. Push the yoke tight against the picture tube and tighten the thumb screw.

Size — Adjust the height and width controls so that the picture fills out the dimensions of the screen.

Linearity — Adjust the vertical linearity control for a symmetrical pattern.

Brightness — Readjust the ion trap for maximum brilliance and best focus. The brilliance control should be backed off to about ⅔ maximum brilliance when making this adjustment.

NOTE: The sequence of service controls adjustments outlined is suggested as a convenient method of approach. Variations of the procedure are permitted to obtain the final result, but always check the setting of the ion trap as the final adjustment.

TO CLEAN PICTURE TUBE FACE OF THE 21″ MODELS

1. While pressing gently against the window panel, remove the four screws from the ornamental strip.
2. Set aside the ornamental strip and lift out the window panel.
3. Clean the face of the picture tube and the back of the window panel.

4. Replace the window panel by pushing it into the slot at the top of the cabinet and then setting it on the bottom platform. Adjust the two plastic strips at the side of the glass to ensure a tight fit in the cabinet.
5. Replace the ornamental strip and clean the face of the window panel.

WARNING: The safety window must always be replaced.

TO REMOVE THE CHASSIS FROM THE CABINET

1. Disconnect the power supply cord.
2. Disconnect the built-in antenna leads and the external antenna.
3. Pull off all knobs.
4. Remove the back cover and swing it to the top of the cabinet.
5. Disconnect the speaker plug and on 21" console models only, pull the speaker lead below the chassis.
6. Remove the four chassis mounting bolts and slide the chassis out.

TO REMOVE THE PICTURE TUBE FROM THE CHASSIS

1. Disconnect the H.V. anode connector from the side of the picture tube and discharge it to the chassis.
2. Discharge the anode contact of the picture tube to the chassis.
3. Remove the picture tube socket.
4. Remove the ion trap.
5. Remove the screw holding the top strap to the side bracket.
6. Remove the two front clamping brackets by unscrewing from the side brackets.
7. Lift the front of the picture tube slightly and pull forward until the back is clear of the yoke assembly.

CAUTION: If the picture tube fails to slip out smoothly, investigate and remove the cause of the trouble. **DO NOT USE FORCE.**

INSTALLING AND ADJUSTING THE PICTURE TUBE

1. With the H.V. anode to the left, slip the neck of the picture tube through the deflection yoke assembly, seating the rim of the picture tube on the supporting strap. Then pull the support strap forward. The ground spring should be bent downwards from the support bracket so that it fits under the tube.
2. Screw the front clamping brackets in position. (See Note 1.)
3. Place the top strap round the rim of the tube and screw tightly to the side bracket.
4. Make certain that the rubber collar of the yoke support rests firmly against the cone of the tube, and push the deflection yoke as far forward as possible.
5. Slip the ion trap over the neck of the picture tube, having the red dot underneath and the magnet on the left when looking at the rear of the chassis.
6. Connect the H.V. anode connector, the picture tube socket and the focus link on the base of the C.R.T.
7. Turn on the receiver and allow a few minutes to warm up.
8. Advance the brilliance control and adjust the ion trap for maximum brilliance. Back off the brilliance control below the defocusing point as the maximum brilliance is approached. The ion trap must be rotated about the axis of the picture tube as well as shifted along the neck, in order to obtain the correct setting.
9. Connect the antenna and tune in a test pattern.
10. Adjust the front controls to give the best possible picture.

NOTE 1. To mount the front support strap correctly, the hole in the strap must be screwed in to the corresponding hole in the side bracket. It is not necessary for the same hole to be used at both sides. The center holes will normally provide the right height for the picture tube.

NOTE 2. It is desirable that the position of the rear support bracket should not be altered. However, when fitting a replacement tube, it may be necessary to mount the support at a very slight angle in order to have the neck of the picture tube centered in the yoke and the face of the picture tube straight. The angle of the bracket may be altered by varying the position of the front and rear mounting screws in the three chassis mounting holes. If necessary, the rear support bracket may be screwed in position after the tube has been mounted. The measurements listed below should be used as a guide if any difficulty is experienced.

Model	Face of Tube to Face of Chassis	Bottom of Tube to Top of Chassis	Center of neck to Bottom of Chassis
A11 21"	1-3/16"	1-7/32"	13-5/16"
P342, R742	⅞"	⅝"	11-5/16"
P344, R744	1"	⅝"	11¾"

In all cases, the distance from the face of the chassis to the face of the knob panel should be 1¼" when the picture tube fits the mask.

HIGH VOLTAGE MEASUREMENT

DO NOT USE HAND-HELD FLEXIBLE TEST LEADS WHEN MAKING THE FOLLOWING MEASUREMENTS. KEEP THE HANDS CLEAR OF THE CIRCUIT DURING MEASUREMENT. A 12 TO 15 K.V. POTENTIAL EXISTS IN THIS CIRCUIT. EXERCISE ALL NORMAL HIGH VOLTAGE PRECAUTIONS.

To measure the H.V. Anode potential, set the CONTRAST and BRILLIANCE controls at minimum. With the controls in this position, the resistance of the test circuit will simulate the load presented to the H.V. power supply of the picture tube. Connect a test circuit as shown. Make the resistor string self-supporting and allow adequate clearance between the resistors and chassis parts to prevent high-voltage breakdown. A meter scale of 0 to 500 Volts, 20,000 ohms per volt sensitivity or better, should be used. Observe the reading on the meter scale and multiply this reading by 50 to obtain the voltage across the circuit. As an example, if the V.T.V.M. reads 260 volts, the potential is 260 x 50 or 13,000 volts.

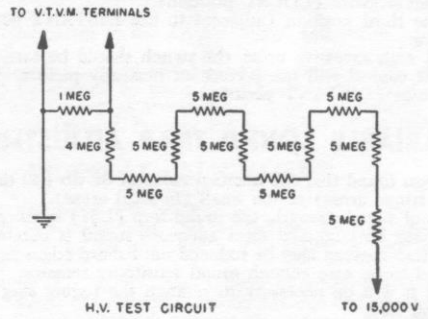

HORIZONTAL OSCILLATOR ALIGNMENT

If the Horizontal Hold control fails to restore synchronization, the Horizontal Range adjustment should be reset.

1. Tune in a weak signal. (If a weak signal is not available attenuate the signal to approximately 100 uv at the input.)
2. Turn the Horizontal Hold control to extreme clockwise position.
3. Adjust the Horizontal Range adjustment (L162) until a large vertical bar appears at the extreme left side of the picture tube. Then turn the Horizontal Range adjustment until the vertical bar just barely disappears to the left of the tube.
4. Check the action of the Horizontal Hold control on all active channels. Repeat the above instructions if necessary to maintain stable synchronization.

NOTE: If the above procedure fails to restore stable synchronization, a waveform check may be made with the aid of an oscilloscope as follows:

5. Connect the oscilloscope as shown in the oscilloscope diagram. Adjust the phase adjustment (L163) until the saw tooth peak is equal to or slightly higher (not more than 10%) than the sine wave while maintaining the picture in synchronization with the Horizontal Range adjustment.

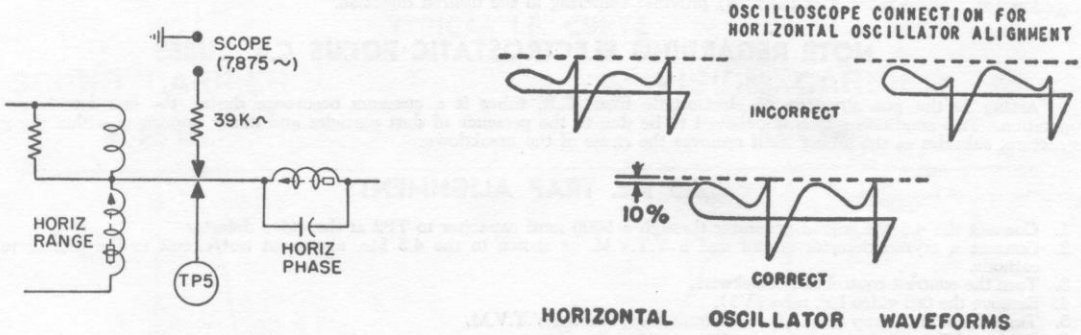

NOTE: This adjustment is very important for correct operation of the circuit. If the broad peak of the wave on the oscilloscope is much lower than the sharp peak, the noise immunity becomes poorer, the stabilizing effect of the tuned circuit is reduced and drift of the oscillator becomes more serious.
On the other hand, if the broad peak of the wave is higher than the sharp peak, the pull-in range becomes inadequate and the broad peak can cause double triggering of the oscillator when the hold control approaches the clockwise position.

6. Remove the oscilloscope and repeat steps Nos. 1, 2 and 3.
7. Check the action of the Horizontal Hold control and repeat the above steps as required to provide positive sychronization on all channels.

CIRCUIT FEATURES

RANGE FINDER SWITCH: This receiver is equipped with a four position switch which enables the receiver to operate over the full range of signal strengths. The correct setting of the switch can be determined by watching the synchronizing action of the receiver. The second position of the switch from full counterclockwise (adjacent to the LOCAL position) will be correct for most locations.

When a signal is so strong that proper adjustment of the contrast control will not remove bends in the picture, the switch should be turned fully counterclockwise (LOCAL position).

Similarly, if the switch is in the third position (adjacent to the DISTANT position) and the picture bends, it should be turned back to the second position.

When a signal is fair or normal with excessive noise, the switch should be turned to the third position. If a signal is so weak that adjustment of the contrast control will not correct an unsteady picture or possibly lose synchronization, then the switch should be turned fully clockwise (DISTANT position).

VARIABLE SOUND TRAP ADJUSTMENTS

In some extreme cases, it has been found that the nominal value of 32 db (40 times) rejection of the sound carrier in the I.F. amplifier may be too great (in fringe areas) or too small (in local areas).

To compensate for the extremes of signal strength, the sound trap (L31) spacing on the first I.F. coil may be varied.

In fringe areas the spacing should be increased until adequate sound is obtained.

In very strong signal areas, the trap spacing may be reduced until sharp edges in the picture are free from a checkerboard effect. The sound should be checked to be sure enough sound sensitivity remains.

When the sound trap is moved it will be necessary to re-align the tuning slug associated with the trap coil. It is also advisable to re-align the first I.F. coil slug.

If the receiver is to receive both strong and weak signals, do not adjust the sound trap spacing.

POWER REQUIREMENTS

The total power consumption of this receiver has been reduced to approximately 150 watts. This results in a cool operating chassis and longer component life. The power economy is obtained by using the audio output tube as a stabilized voltage dropping impedance for the low voltage B + supply. Therefore, the audio power amplifier tube should not be removed from its socket while the set is operating.

CASCODE TUNER

The tuner embodies the latest developments in cascode circuits, and has a noise figure of only 5 to 9 db from the theoretical low limit. The R.F. Amplifier tube should not be replaced with any other type than that originally used, and the tuner should be re-aligned when a new tube is installed.

CENTERING DEVICE

The centering device consists of two magnetized rings which cancel each other when the tabs are together.

Separating the tabs, increases the effective magnetism and the amount of the centering action. Rotating the two rings together (at a given spacing of the tabs) provides centering in the desired direction.

A NOTE REGARDING ELECTROSTATIC FOCUS C.R. TUBES

Arcing in the gun structure of electrostatic focus C.R. tubes is a common occurence during the first few hours of operation. This condition which is believed to be due to the presence of dust particles and minor impurities within the gun structure, subsides as the arcing itself removes the cause of the breakdown.

4.5 Mc. TRAP ALIGNMENT

1. Connect the 4.5 Mc. signal generator through a 5000 mmf capacitor to TP2 at the video detector.
2. Connect a crystal detector circuit and a V.T.V.M. as shown in the 4.5 Mc. alignment test circuit to the picture tube cathode.
3. Turn the contrast control fully clockwise.
4. Remove the 3rd video I.F. tube (V5).
5. Tune the 4.5 Mc. trap (L42) for minimum output on the V.T.V.M.
6. Replace V5.

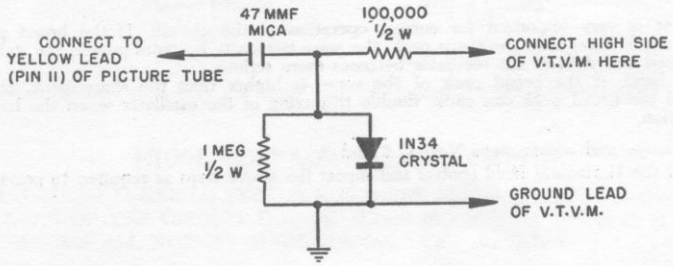

SOUND ALIGNMENT TEST CIRCUIT

SOUND I.F. ALIGNMENT

1. Apply a 4.5 Mc. unmodulated signal to TP2 on the Video Detector. Connect a d-c V.T.V.M. to TP4, pin 2 of the Ratio Detector socket (V8). Set V.T.V.M. to —3 v scale.
2. Adjust the 4.5 Mc. Sound Take-off Coil (L131) for maximum V.T.V.M. reading. Do not exceed +3 volts.
3. Adjust the primary of the Ratio Detector (bottom) (L132-L133) for maximum V.T.V.M. reading.
4. Set the input for —3 volts on the V.T.V.M.
5. Connect the V.T.V.M. to TP5, the Ratio Detector Audio Output.
6. Adjust the Ratio Detector Secondary (top) (L134) for —1.5 V.
7. Apply approximately 30% amplitude modulation to the 4.5 Mc. signal and adjust L134 for minimum audio output.
8. Adjustments 6 and 7 should agree closely.
9. Repeat adjustments 3, 6 and 7 until there is no interaction of one adjustment on the other.

   The 4.5 Mc. intercarrier I.F. can also be aligned by using the 4.5 Mc. F.M. signal developed by the station. Connect a V.T.V.M. to TP4 and using the Fine Tuning as signal input control to give as low a reading as possible on the V.T.V.M., adjust all 3 adjustments (Sound Take-off, Primary and Secondary of the Ratio Detector) for maximum reading.

VIDEO I.F. ALIGNMENT

1. Turn Channel Selector to channel 3 or any signal free low channel.
2. Place a tight fitting shield over V2, the 6U8 mixer tube, and connect the hot I.F. lead from a correctly terminated signal generator to the shield. (The shield must not be grounded). The generator case, however, must be grounded to the chassis as near as possible to the 6U8.
3. Connect a decoupling network consisting of a 10,000 ohms resistor in series with a 1000 mmf condenser between TP3 and ground. Connect a d-c V.T.V.M. across the condenser which has one end grounded.
4. Throughout the I.F. amplifier alignment use just enough signal input to give —2 V, d-c output at the video detector TP3.
5. Set the signal generator to 44.1 Mc. and adjust L39-L40 for maximum output. If two peaks are found, use the one with the slug farthest out of the coil.
6. Set the Signal Generator to 42.8 Mc. and adjust L37-L38 for maximum output.
7. Set the Signal Generator to 45.1 Mc. and adjust L34-L35 for maximum output.
8. Set the Signal Generator to 47.25 Mc. and adjust L33, L36 for minimum output.
9. Repeat steps 6, 7 and 8 until there is no interaction.
10. Shunt a 180 mmf condenser from TP8 to ground.
11. Set the Signal Generator to 42.8 Mc. and adjust L32, L7 for maximum output.
12. Set the signal generator to 41.25 Mc. and adjust L31 for minimum output.
13. Repeat steps 11 and 12 until there is no interaction.
14. Remove shunt.

I.F. ALIGNMENT FREQUENCIES

Bandpass Tuner		L7	42.8 Mc.
Bandpass	—1st I.F.	L32	42.8 Mc.
Sound Trap	—1st I.F.	L31	41.25 Mc.
	2nd I.F.	L34, L35	45.1 Mc.
Adjacent Sound Trap	—2nd I.F.	L33	47.25 Mc.
	3rd I.F.	L37, L38	42.8 Mc.
Adjacent Sound Trap	—3rd I.F.	L36	47.25 Mc.
	4th I.F.	L39, L40	44.1 Mc.

TYPICAL I.F. CURVE

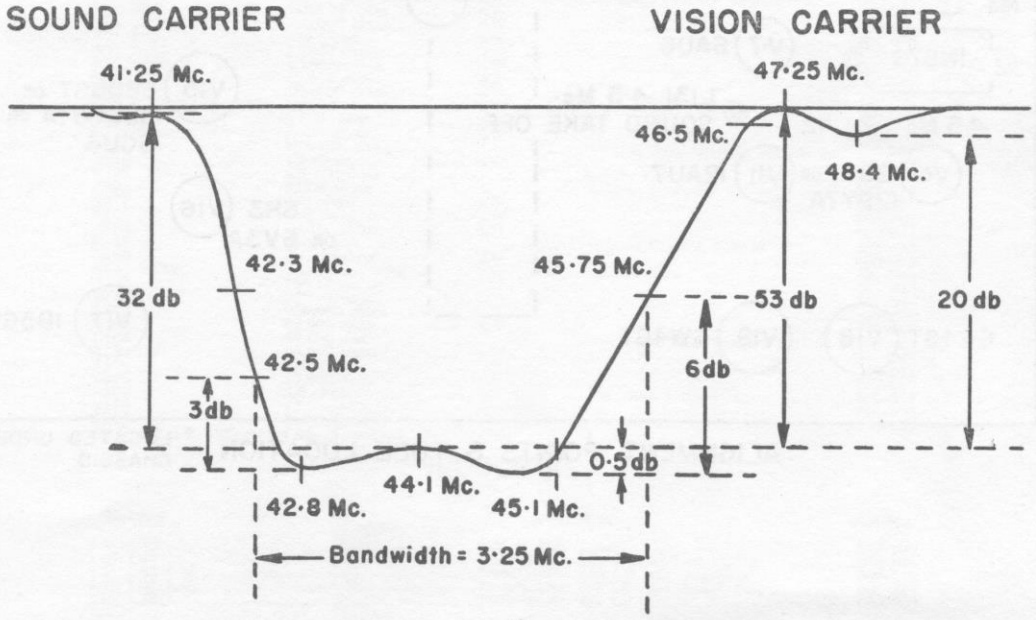

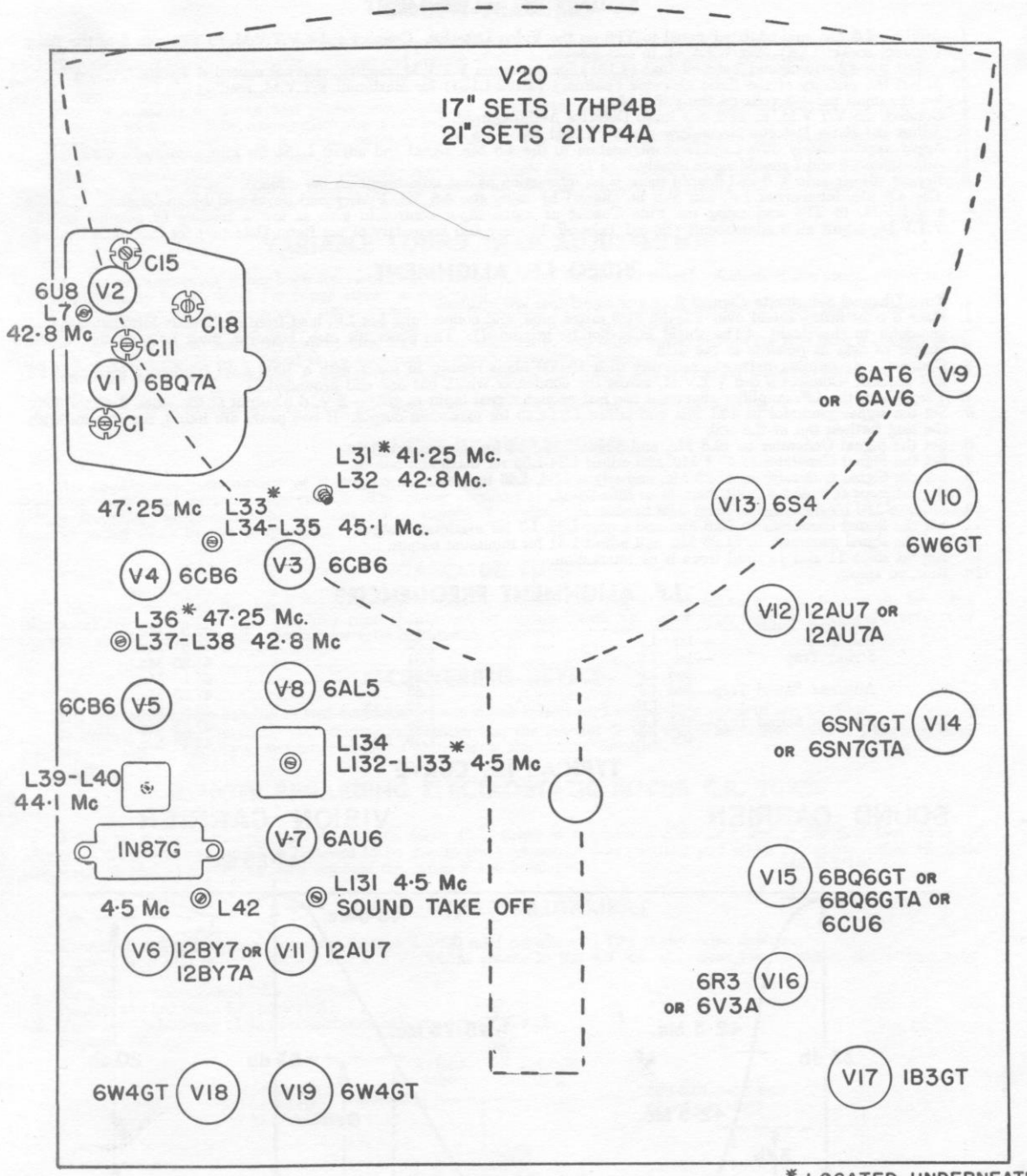

ALIGNMENT POINTS & TUBE LOCATION

* LOCATED UNDERNEATH CHASSIS

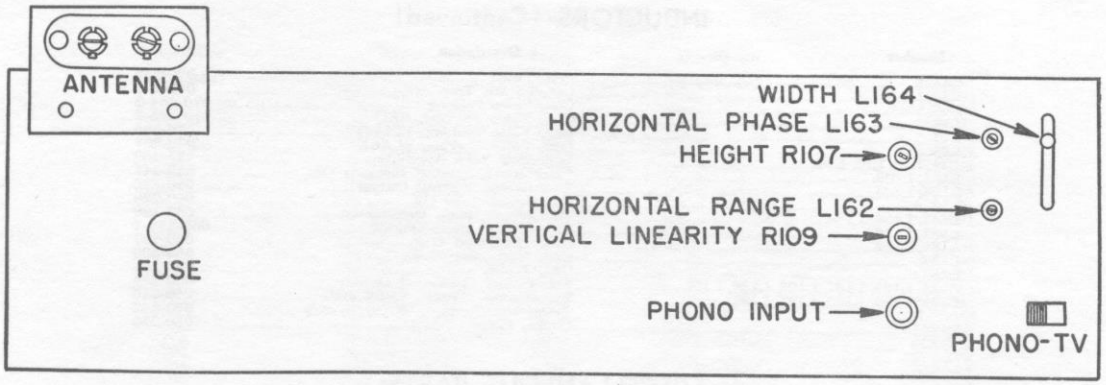

REAR CONTROLS

REPLACEMENT PARTS

For dependable repairs use only genuine Rogers-Majestic or Philips replacement parts. When ordering always give description, part number and model of receiver.

RESISTORS

Number	Value	Rating	Description	Part No.
R13	3.9 megohms	¼W		500-968
R31	680 ohms	¼W		500-923
R32, R167	3,900 ohms	¼W		500-932
R33, R37	100 ohms	¼W		500-913
R34	18,000 ohms	¼W		500-940
R35, R39	47 ohms	¼W		500-909
R38, R132, R170	8,200 ohms	¼W		500-936
R40	6,800 ohms	1W		502-635
R41	180 ohms	¼W		500-916
R42, R46, R48, R104	1 megohm	¼W		500-961
R43, R83	470,000 ohms	¼W		500-957
R44	4,700 ohms	¼W		500-933
R45, R53	15,000 ohms	½W	B.T.S.	501-828
R47, R174	68 ohms	¼W		500-911
R49	1,500 ohms		Contrast Control, Part of	506-033
R50, R161, R169	330,000 ohms	¼W		500-955
R51	100,000 ohms	¼W		500-949
R52	39,000 ohms	½W		501-644
R54	5,600 ohms	2W		503-334
R55	1,000 ohms	1W		502-625
R56, R57	1 megohm	½W	B.T.S.	501-834
R58	50,000 ohms	½W	Brilliance Control, Part of	080-168
R59, R86, R137, R173	270,000 ohms	¼W		500-954
R60, R168, R172	150,000 ohms	¼W		500-951
R71, R72	560 ohms	½W		501-622
R81, R108	12,000 ohms	¼W		500-938
R82, R110	2.2 megohms	¼W		500-965
R84	12,000 ohms	½W		501-638
R85	560,000 ohms	¼W		500-958
R87, R133, R164, R171	47,000 ohms	¼W		500-945
R88	5,600 ohms	½W		501-634
R89, R90	2,700 ohms	¼W		500-930
R105	700,000, ohms		Vertical Hold Control, Part of	506-031
R106	1.2 megohms	¼W		500-962
R107	2.5 megohms		Height Control	505-080
R109	5,000 ohms		Vertical Linearity Control	505-075
R111	470 ohms	¼W		500-921
R131	150 ohms	¼W		500-915
R134	39,000 ohms	¼W		500-944
R135	1 megohm		Volume Control, Part of	506-033
R136	10 megohms	¼W		500-973
R138, R139	1 megohm, ±5%	½W		501-361
R140	150 ohms	½W		501-615
R141	220 ohms	¼W		500-917
R162	820,000 ohms	¼W		500-960
R163	82,000 ohms	¼W		500-948
R165	50,000 ohms		Horizontal Hold Control, Part of	506-031
R166	68,000 ohms	¼W		500-947
R175	4,700 ohms	2W		503-333
R176	10,000 ohms	1W		502-637
R177	3.3 ohms	½W	±½ Ohm Carbon	501-824
R179	22 ohms	¼W		501-605
R191	270,000 ohms	1W		502-654

All Resistors ± 10% except where marked.

INDUCTORS

Number	Description	Part No.
L1—L12	Part of R.F. Tuner	130-164
L31, L32	Transformer, 1st I.F. and Sound Trap	060-217
L33, L34, L35	Transformer, 2nd I.F. and Sound Trap	060-218
L36, L37, L38	Transformer, 3rd I.F. and Sound Trap	060-219
L39, L40	Transformer, 4th I.F.	060-232

INDUCTORS (Continued)

Number	Description	Part No.
L41	Coil Tweet	070-256
L42	Coil 4.5 Mc. Trap	060-230
L43	Coil, Video Peaking	070-284-2
L44	Coil, Video Peaking, RED	070-285-2
L45	Coil, Video Peaking, YELLOW	070-286
L46	Coil, Video Peaking, BLACK	070-287
L71, L72, L73, L74	Deflection Yoke Assembly	121-469
L101, L102	Transformer, Vertical Blocking Osc.	050-247
L103, L104	Transformer, Vertical Output	050-230
L131	Coil Sound Take Off	060-229
L132, L133, L134	Transformer, Ratio Detector	060-199
L135, L136	Transformer Audio Output	050-232-2
L161, L162	Coil, Horizontal Osc.	060-207
L163	Coil, Horizontal Phase	060-206
L164	Coil, Width	060-228
L165, L166, L167, L168, L169, L170	Transformer Horizontal Output	050-234
L191, L192, L193, L194, L195	Transformer, Power 25-60 cycle	050-216
	TransformerPower 60 cycle only	050-243
L196	Choke, Filter	050-228

MISCELLANEOUS PARTS

Part No.	Description
571-096	Antenna Panel
130-152	Centering Device
301-874	Connector, Focus Link
300-324	Clip, Transformer Mounting
121-469	Deflection Yoke and Plug Assembly
642-028	Diode Crystal 1N87G
646-021	Fuse 4a
130-140	Ion Trap
572-302	Knob, Channel, Philips
572-303	Knob, Channel, Rogers
572-304	Knob, Fine Tuning, Philips
572-305	Knob, Fine Tuning, Rogers
572-306	Knob, On-Off Volume, Philips
572-307	Knob, On-Off Volume, Rogers
572-308	Knob, Contrast, Philips
572-309	Knob, Contrast, Rogers
572-221	Knob, Large Dual
572-220	Knob, Small Dual
572-231	Knob, Small Dual, Zone

Part No.	Description
100-003	Line Cord, and Plug
506-033	Part of On-Off Switch
571-106	Phone Connector
325-130	Rubber Channel
130-164	R.F. Tuner
301-876	Spring Tube Grounding
570-050	Socket Assembly, C.R.T.
110-538	Strap and Bracket Assembly 17"
110-539	Strap and Bracket Assembly 21"
080-168	Switch Range Finder
080-166	Switch, Slide D.P.D.T.
325-131	Strip Channel Plastic
570-049	Tube Socket and Corona Ring
570-001	Tube Socket Octal
570-051	Tube Socket Octal
570-027	Tube Socket 7 Prong, 8 Contact
570-043	Tube Socket, 9 Prong, 10 Lug.
570-018	Tube Socket, 8 Contact
519-506	Vertical Integrating Network PC104

CABINET PARTS

Model P342, R742

121-480	Back Cover Assembly
030-561	Cabinet, 17", Walnut
030-562	Cabinet, 17", Mahogany
030-563	Cabinet, 17", Blonde
332-675	Mask Picture Tube, 17"
332-723	Panel, Window, 17" (Tinted)
041-156	Speaker, 5", P.M.

Model P345, R745

330-579	Back Cover
030-564	Cabinet, 21", Console, Walnut
030-565	Cabinet, 21", Console, Mahogany
030-566	Cabinet, 21", Console, Blonde
627-081	Grille Cloth
332-696	Mask, Picture Tube, 21"
332-710	Panel, Window, 21" (tinted)
041-150	Speaker, 8½", P.M.

Model P344, R744

121-483	Back Cover Assembly
030-574	Cabinet, 17", Console, Walnut
030-575	Cabinet, 17", Console, Mahogany
030-576	Cabinet, 17", Console, Blonde
627-082	Grille Cloth
332-703	Mask, Picture Tube, 17"
332-724	Panel, Window, 17" (tinted)
041-138	Speaker, 8", P.M.

Model P346, R746

330-578	Back Cover
030-567	Cabinet, 21", Walnut
030-568	Cabinet, 21", Mahogany
030-569	Cabinet, 21", Blonde
627-083	Grille Cloth
332-696	Mask, Picture Tube, 21"
332-710	Panel, Window, 21" (tinted)
041-150	Speaker, 8½", P.M.

Model P347, R747

330-581	Back Cover
030-552	Cabinet, 21", Console, Walnut
030-553	Cabinet, 21", Console Mahogany
030-554	Cabinet, 21", Console, Blonde
627-080	Grille Cloth
332-696	Mask Picture Tube, 21"
332-710	Panel Window, 21" (tinted)
041-150	Speaker, 8½", P.M.

CONDENSERS

Number	Value	Rating	Description	Part No.
C24, 164	.047 mf	125V	Paper Moulded	515-271
C30	270 mmf	500V	Ceramic	514-121
C31, 33, 35, 36, 37, 40	1,500 mmf, ±10%	500V	Ceramic	514-380
C32, 34, 38	27 mmf, ±5%	500V	Ceramic	514-051
C39	2,200 mmf, ±10%	500V	Ceramic	514-132
C42, 43	4.7 mmf, ±10%	500V	Ceramic	512-338
C44	.1 mf, ±10%	125V	Paper Moulded	515-275
C45	27 mmf, ±10%	500V	Ceramic	514-512
C46	.1 mf	200V	Moulded Tubular	515-475
C47	10 mf	250V	Electrolytic, Part of	516-561
C48	10 mf	300V	Electrolytic, Part of	516-561
C49	.047 mf, ±10%	200V	Moulded Tubular	515-471
C50	1,000 mmf	500V	Ceramic	514-581
C71	68 mmf, ±10%	2,000V	Disc Cap	514-050
C81	10,000 mmf	500V	Disc Ceramic	514-012
C82	150 mmf	500V	Ceramic	514-571
C83, 165	.047 mf, ±10%	400V	Paper Moulded	515-321
C84	3.2 mf	70V	Electrolytic	516-065
C85, C132	47 mmf, ±10%	500V	Ceramic	514-515
C106	.01 mf, ±10%	200V	Moulded Tubular	515-034
C107	390 mmf, ±10%	500V	Ceramic	514-576
C108	.047 mf	400V	Paper Moulded	515-521
C109	.047 mf, ±10%	400V	Paper Moulded	515-037
C110	60 mf	50V	Electrolytic, Part of	516-560
C131	2.2 mmf	500V	Ceramic	514-549
C133, 134	4,000 mmf	500V	Dual Disc	514-020
C135	10 mmf }			
C136	115 mmf }		Part of	060-199
C137	10 mf	70V	Electrolytic	516-070
C138, 139	2,000 mmf	500V	Dual Disc	514-013
C140	.0056 mf	400V	Paper Moulded	517-410
C141	5,000 mmf	500V	Ceramic	514-011
C142	.0047 mf	400V	Paper Moulded	515-309
C143	.018 mf	400V	Paper Moulded	515-316
C144	40 mf	150V }		
C145	50 mf	150V }	Electrolytic, Part of	516-560
C161	120 mmf, ±10%	500V	Ceramic	514-520
C162	180 mmf, ±10%	500V	Ceramic	514-522
C163, 172	82 mmf	500V	Ceramic	514-568
C166	.022 mf	200V	Moulded Tubular	515-267
C167	.47 mf	125V	Paper Moulded	515-283
C168	270 mmf, ±10%	500V	Silver Mica	701-147
C169	.01 mf, ±10%	600V	Moulded Tubular	515-019
C170	820 mmf, ±10%	500V	Silver Mica	701-159
C173	1,000 mmf	500V	Ceramic	514-052
C174	10 mf	500V	Electrolytic, Part of	516-561
C175	.1 mf	400V	Paper Moulded	515-325
C191	.01 mf	600V	Paper Moulded	515-363
C192	100 mf	350V	Electrolytic, Part of	516-561
C193	100 mf	300V	Electrolytic, Part of	516-560

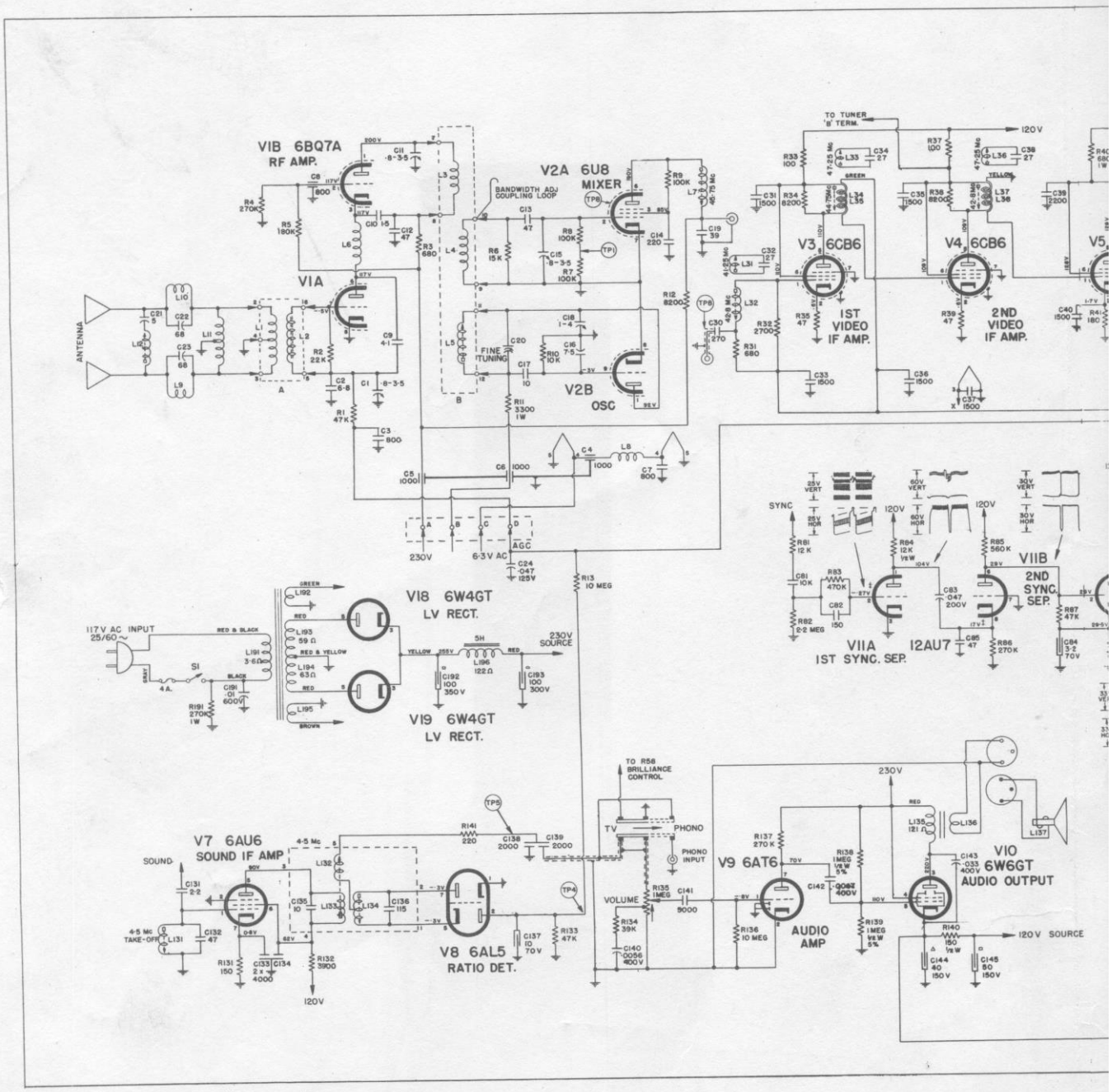

FIRST MADE FOR 3-4

P342, P344, P

R742, R744, R

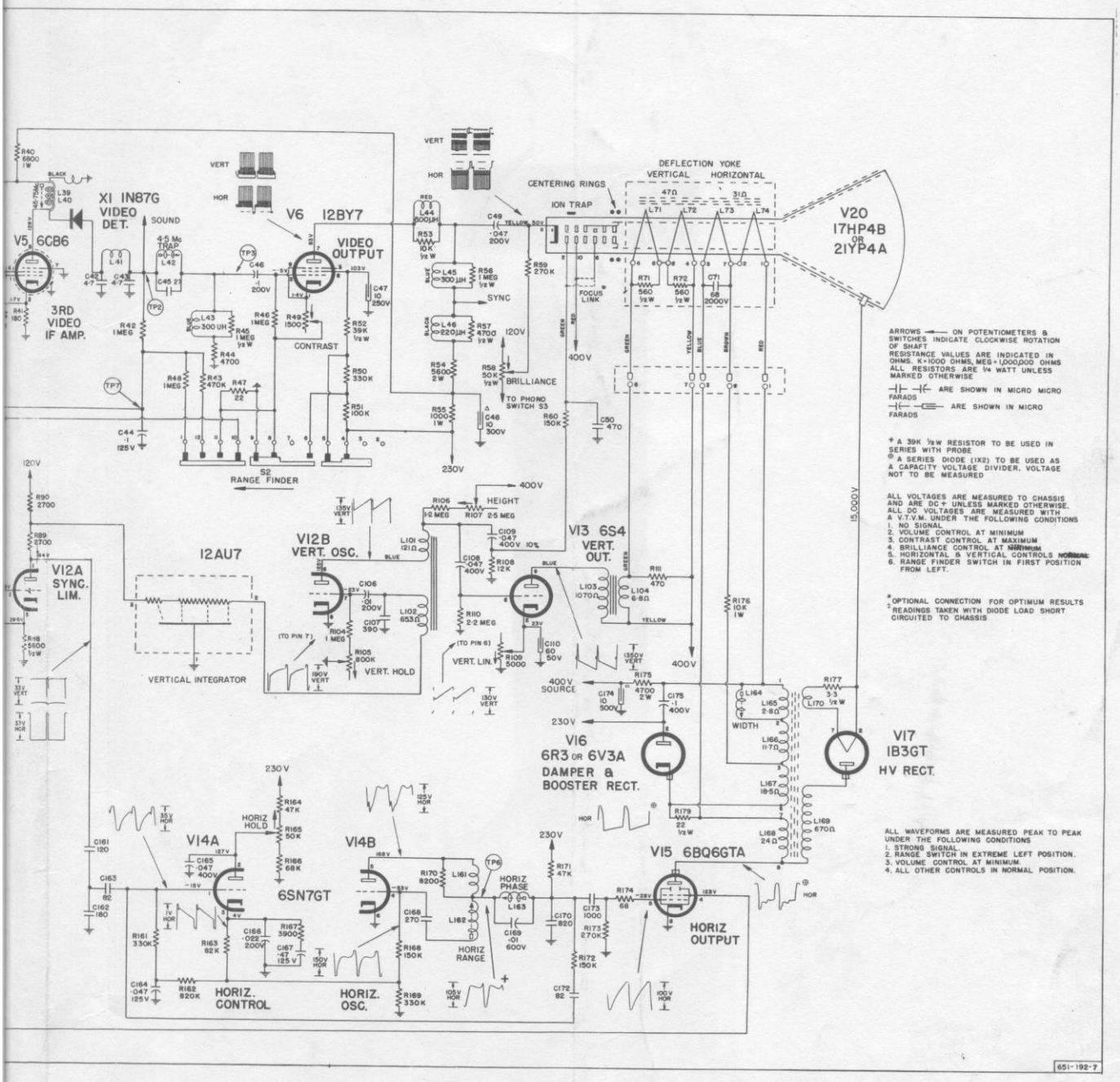

4-SERIES of Following Sets:

P345, P346, P347

R745, R746, R747

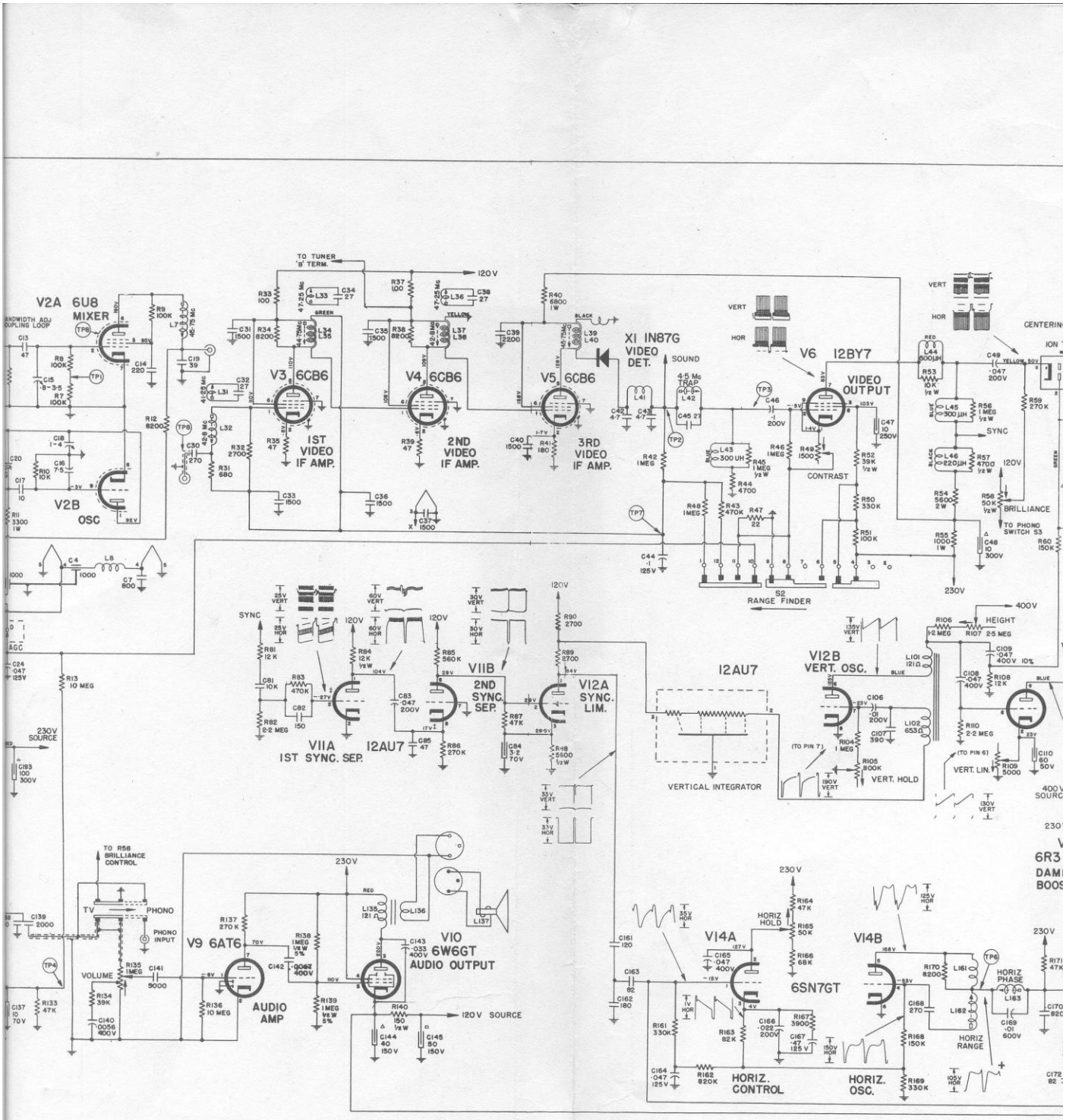

FIRST MADE FOR 3-4-SERIES of Following Sets:

P342, P344, P345, P346, P347

R742, R744, R745, R746, R747