PHOTOFACT* Folder

*TRADE MARK

SETCHELL-CARLSON MODEL P-63 (Ch. C-102)

SETCHELL-CARLSON MODEL P-63 (Ch. C-102)

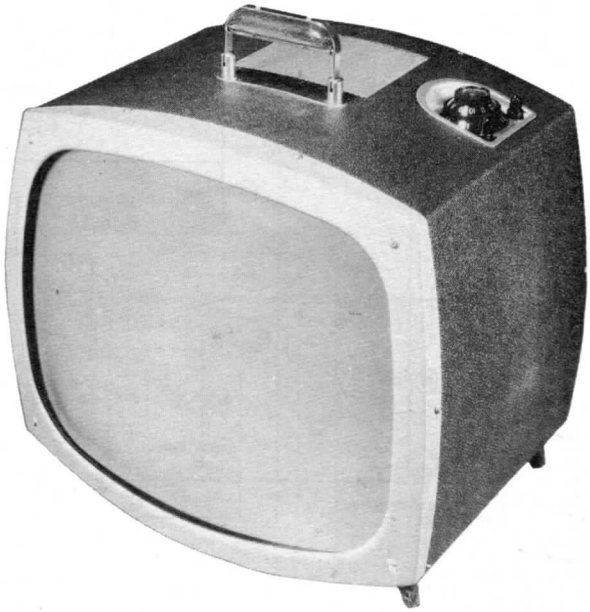

DISASSEMBLY INSTRUCTIONS

CHASSIS REMOVAL

1. Remove 4 push-on type knobs from the top.
2. Remove 6 metal screws holding the rear cover. Remove the rear cover.
3. Remove 4 chassis bolts from the bottom.
4. Remove the chassis.

TRADE NAME	Setchell-Carlson Model P-63 (Ch. C-102)
MANUFACTURER	Setchell-Carlson Inc., New Brighton, Minn.
TYPE SET	Television Receiver
TUBES	Seventeen
POWER SUPPLY	110-120 Volts AC, 60 Cycle RATING 120 Watts, 1.19 Amp. @ 117 Volts AC
TUNING RANGE	Channels 2 thru 13 VHF, Video IF 45.75MC, Sound IF 41.25MC (Intercarrier)

SERVICING IN THE FIELD

TUNER OSCILLATOR ADJUSTMENTS

Touch-up adjustment of the VHF Oscillator is possible by removing the Channel Selector and Fine Tuning knobs. Set the Fine Tuning at the center of its range. One slug for HIGH band adjustment is located at 1 o'clock, and should be adjusted first. The LOW band adjustment is located at 6 o'clock. Adjust for best picture and sound.

PICTURE TUBE SAFETY GLASS CLEANING

Remove 6 metal screws from the front cover. Remove the front and glass.

FOCUS

No provision is made to vary the focus on this receiver.

HORIZONTAL OSCILLATOR FIELD ADJUSTMENTS

Adjust Horizontal Hold until picture synchronizes horizontally.

SOUND IF DETECTOR BUZZ ADJUSTMENT

To eliminate sound IF detector buzz, adjust the Ratio Detector secondary (All) located on top of chassis.

FUSES

One fuse is used for LV power supply protection. (For location, see tube placement chart.)

CENTERING

Centering is accomplished electrically. Adjust the Horizontal Centering control until picture is properly centered. (For location, see tube placement chart.)

SETCHELL-CARLSON MODEL P-63 (Ch. C-102)

SET 402 FOLDER 3

HOWARD W. SAMS & CO., INC. • Indianapolis 5, Indiana

The listing of any available replacement part herein does not constitute in any case a recommendation, warranty or guaranty by Howard W. Sams & Co., Inc., as to the quality and suitability of such replacement part. The numbers of these parts have been compiled from information furnished to Howard W. Sams & Co., Inc., by the manufacturers of the particular type of replacement part listed. Reproduction or use, without express permission, of editorial or pictorial content, in any manner, is prohibited. No patent liability is assumed with respect to the use of the information contained herein. © 1958 Howard W. Sams & Co., Inc., Indianapolis 5, Indiana. Printed in U.S. of America

H507

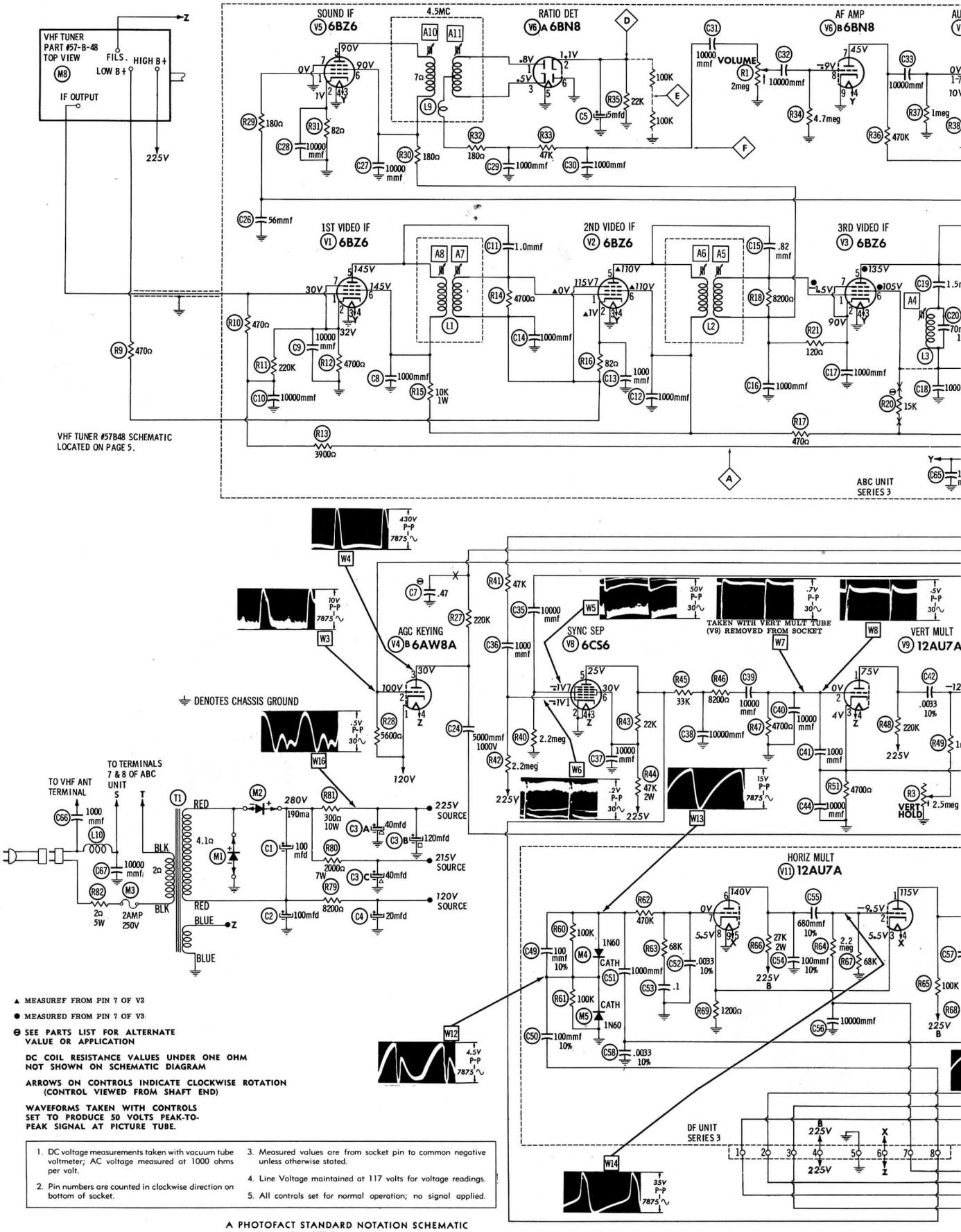
VHF TUNER
PART #57-B-48
TOP VIEW
FILS.
HIGH B+
LOW B+
IF OUTPUT
M8
225V
SOUND IF
V5 6BZ6
4.5MC
RATIO DET
V6 A 6BN8
AF AMP
V6 B 6BN8
VOLUME
1ST VIDEO IF
V1 6BZ6
2ND VIDEO IF
V2 6BZ6
3RD VIDEO IF
V3 6BZ6
VHF TUNER #57B48 SCHEMATIC
LOCATED ON PAGE 5.
ABC UNIT
SERIES 3
AGC KEYING
V4 B 6AW8A
SYNC SEP
V8 6CS6
TAKEN WITH VERT MULT TUBE
(V9) REMOVED FROM SOCKET
VERT MULT
V9 12AU7A
VERT HOLD
DENOTES CHASSIS GROUND
TO VHF ANT TERMINAL
TO TERMINALS 7 & 8 OF ABC UNIT
225V SOURCE
215V SOURCE
120V SOURCE
HORIZ MULT
V11 12AU7A
DF UNIT
SERIES 3
▲ MEASUREF FROM PIN 7 OF V2
● MEASURED FROM PIN 7 OF V3
⊖ SEE PARTS LIST FOR ALTERNATE VALUE OR APPLICATION
DC COIL RESISTANCE VALUES UNDER ONE OHM NOT SHOWN ON SCHEMATIC DIAGRAM
ARROWS ON CONTROLS INDICATE CLOCKWISE ROTATION (CONTROL VIEWED FROM SHAFT END)
WAVEFORMS TAKEN WITH CONTROLS SET TO PRODUCE 50 VOLTS PEAK-TO-PEAK SIGNAL AT PICTURE TUBE.
1. DC voltage measurements taken with vacuum tube voltmeter; AC voltage measured at 1000 ohms per volt.
2. Pin numbers are counted in clockwise direction on bottom of socket.
3. Measured values are from socket pin to common negative unless otherwise stated.
4. Line Voltage maintained at 117 volts for voltage readings.
5. All controls set for normal operation; no signal applied.
A PHOTOFACT STANDARD NOTATION SCHEMATIC
Howard W. Sams & Co., Inc. 1958

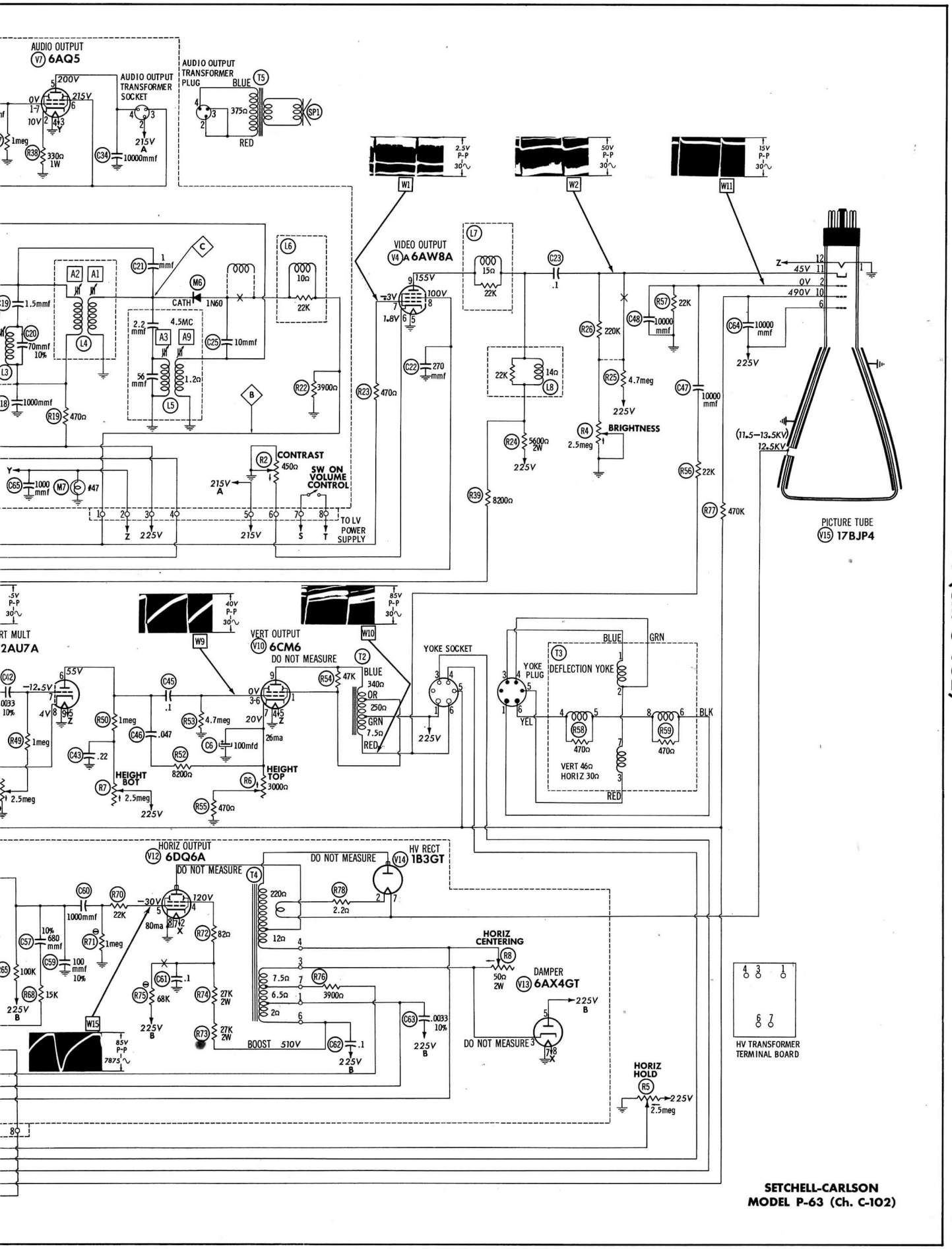
AUDIO OUTPUT
V7 6AQ5
AUDIO OUTPUT TRANSFORMER SOCKET
AUDIO OUTPUT TRANSFORMER PLUG
BLUE
RED
T5
SP1
VIDEO OUTPUT
V4 A 6AW8A
W1
W2
W11
L7
L6
L4
L5
L8
A2
A1
A3
A9
M6
1N60
CATH
C
B
CONTRAST
R2
SW ON VOLUME CONTROL
TO LV POWER SUPPLY
BRIGHTNESS
R4
PICTURE TUBE
V15 17BJP4
(11.5–13.5KV)
12.5KV
VERT MULT
2AU7A
VERT OUTPUT
V10 6CM6
DO NOT MEASURE
W9
W10
T2
YOKE SOCKET
YOKE PLUG
T3
DEFLECTION YOKE
VERT 46Ω
HORIZ 30Ω
HEIGHT BOT
HEIGHT TOP
HORIZ OUTPUT
V12 6DQ6A
HV RECT
V14 1B3GT
T4
HORIZ CENTERING
R8
DAMPER
V13 6AX4GT
BOOST 510V
W15
HV TRANSFORMER TERMINAL BOARD
HORIZ HOLD
R5
SETCHELL-CARLSON
MODEL P-63 (Ch. C-102)

TUBE PLACEMENT CHART

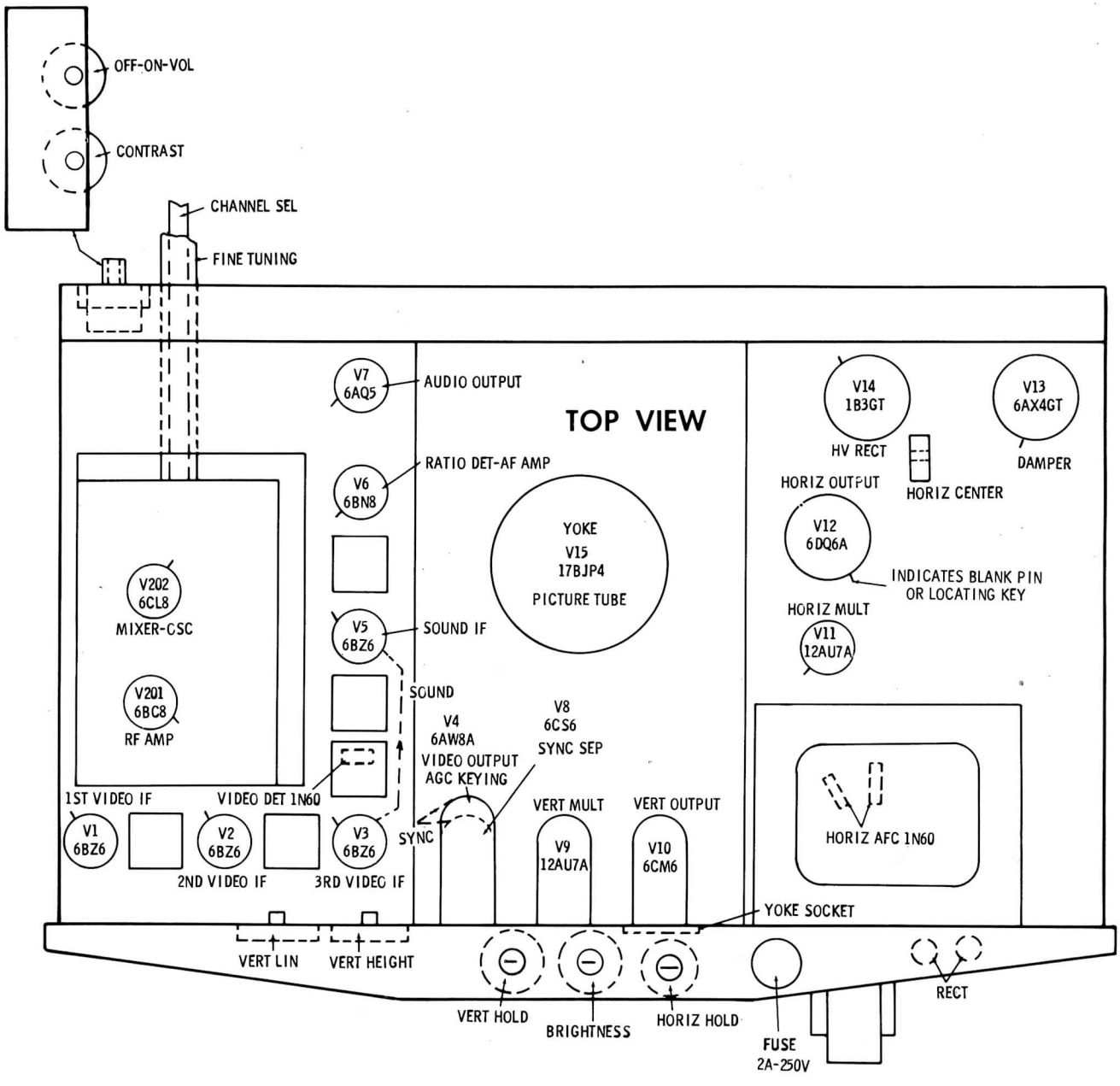

TUBE FAILURE CHECK CHART

The following chart lists tubes whose failures are most likely to produce indicated symptoms. Refer to tube placement chart for location and type of tube.

POWER SUPPLY FAILURE
No raster, no sound Fuse (M3), Rectifiers (M1, M2)

SWEEP FAILURE
No raster, has sound Rectifiers (M5, M6), V11, V12, V13, V14, V15
No vertical deflection V9, V10
Poor vert. linearity or foldover V9, V10
Poor horiz. linearity or foldover V11, V12, V13
Narrow picture V11, V12, V13, M1, M2
Vert. off freq. V9
Horiz. off freq. V11

LOSS OF PICTURE OR SOUND
No pic, no sound, has raster V1, V2, V3, Diode (M4)
No pic, no sound, has snow V201, V202, V1
No pic, has sound, has raster V4, V15
Has pic, no sound V5, V6, V7
Overloaded picture V4

SYNC FAILURE
No vert. sync V8
No horiz. sync V8, M5, M6
No vert. or horiz. sync V8

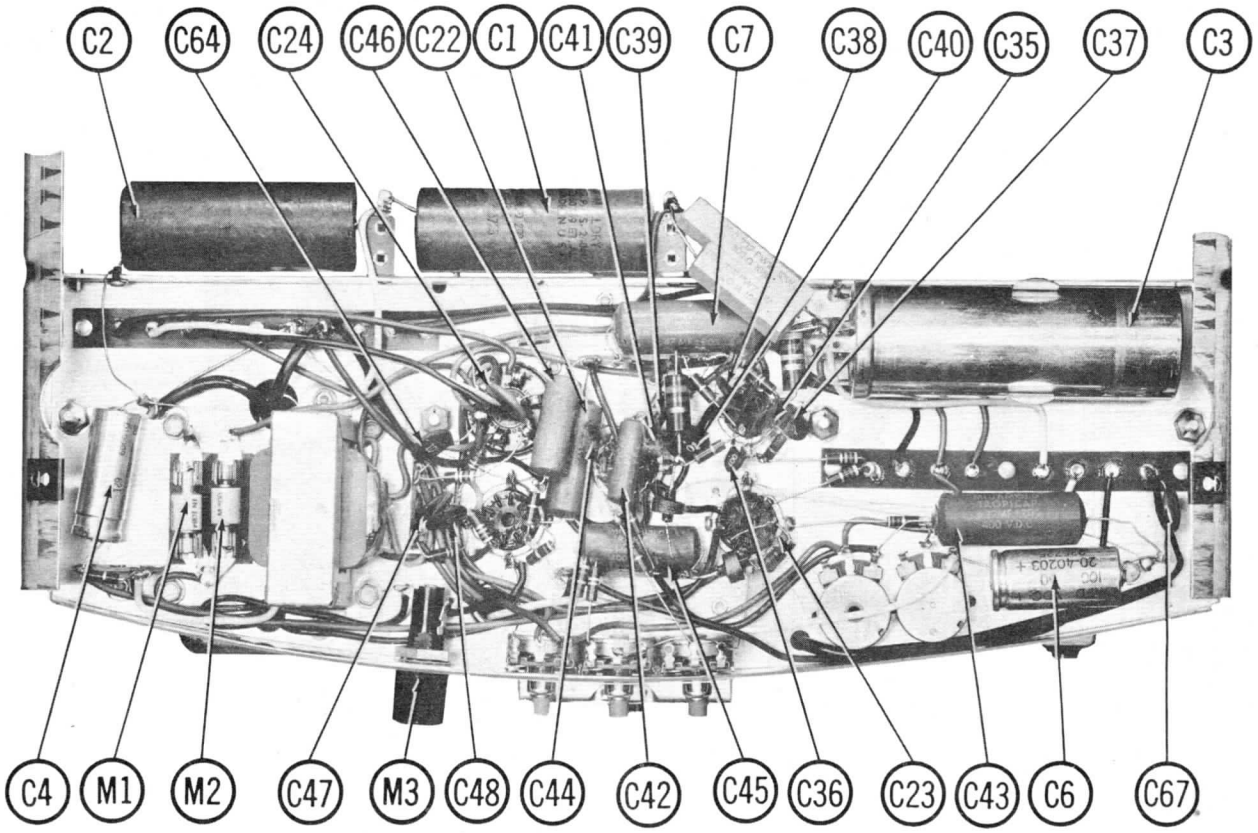

CHASSIS BOTTOM VIEW-CAPACITOR IDENTIFICATION

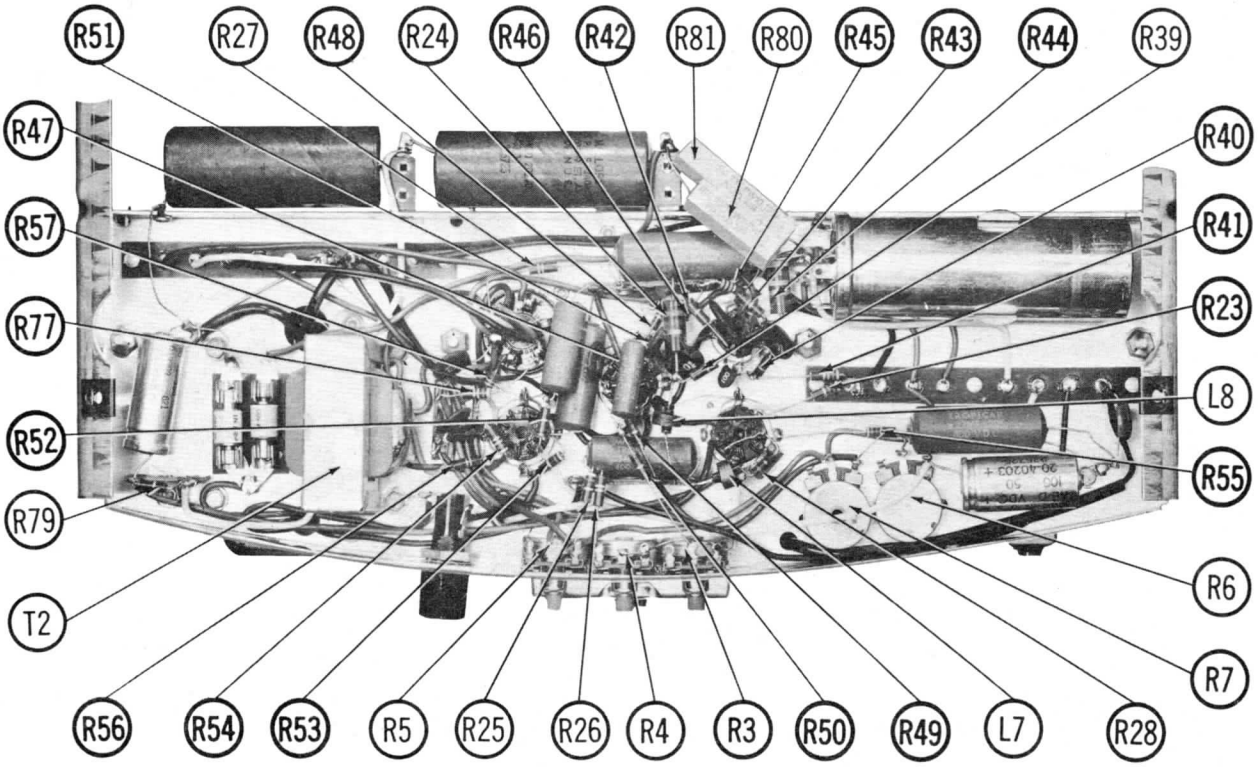

CHASSIS BOTTOM VIEW-RESISTOR AND INDUCTOR IDENTIFICATION

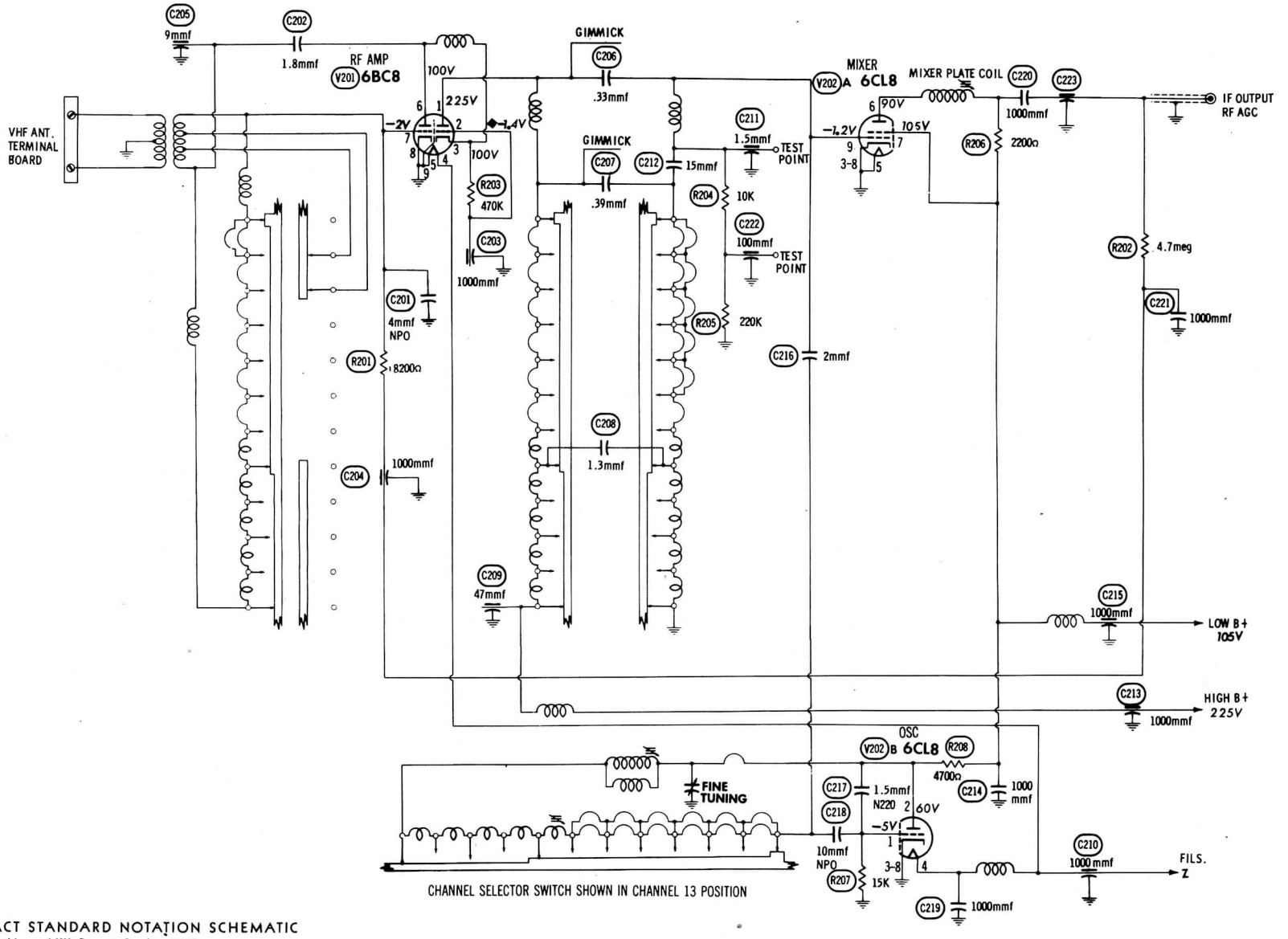

CHANNEL SELECTOR SWITCH SHOWN IN CHANNEL 13 POSITION

A PHOTOFACT STANDARD NOTATION SCHEMATIC
Howard W. Sams & Co., Inc. 1958

VHF TUNER # 57B48

SET 402 FOLDER 3

SETCHELL-CARLSON MODEL
P-63 (Ch. C-102)
FOLDER 3

TUNER PARTS LIST AND DESCRIPTIONS

TUBES (GENERAL ELECTRIC, SYLVANIA)

ITEM No.	USE	TYPE	NOTES
V201	RF Amplifier	6BC8	

ITEM No.	USE	TYPE	NOTES
V202	Mixer-Osc.	6CL8	

FIXED CAPACITORS

Capacity values given in the rating column are in mfd. for Paper Capacitors, and in mmfd. for Mica and Ceramic Capacitors.

ITEM No.	RATING		REPLACEMENT DATA							NOTES
	CAP.	VOLT	Setchell-Carlson PART No.	AEROVOX PART No.	CENTRALAB PART No.	CORNELL-DUBILIER PART No.	ERIE PART No.	MALLORY PART No.	SPRAGUE PART No.	
C201	4					C10V4C				NPO
C202	1.8									
C203	1000			EF-001	MFT-1000				503C-D1	
C204	1000			EF-001	MFT-1000				503C-D1	
C205	9									
C206	.33									
C207	.39									
C208	1.3									
C209	47									
C210	1000			EF-001	MFT-1000				503C-D1	
C211	1.5									
C212	15			BPD-000015	DD-150	L10Q15	ED-15	UC-5415	5GA-Q15	
C213	1000			EF-001	MFT-1000				503C-D1	
C214	1000			BPD-001	DD-102	BYA6D1	ED-1000	DC521	5HK-D1	
C215	1000			EF-001	MFT-1000				503C-D1	
C216	2					C10V2C				
C217	1.5									N220
C218	10			NPO-SI 10	TCZ-10	CTA6Q1C	TCO-10	ZT-541	5TCC-Q1	NPO
C219	1000			BPD-001	DD-102	BYA6D1	ED-1000	DC521	5HK-D1	
C220	1000			BPD-001	DD-102	BYA6D1	ED-1000	DC521	5HK-D1	
C221	10000			BPD-01	DD-103	BYA6S1	ED-01	DC511	5HK-S1	
C222	100			EF-0001	MFT-100				503C-T1	
C223										

RESISTORS

All wattages 1/2 watt, or less, unless otherwise listed.

ITEM No.	RATING		Setchell-Carlson PART No.	NOTES
	OHMS	WATT		
R201	8200Ω			
R202	4.7meg			
R203	470K			
R204	10K			

ITEM No.	RATING		Setchell-Carlson PART No.	NOTES
	OHMS	WATT		
R205	220K			
R206	2200Ω			
R207	15K			
R208	4700Ω			

TUNER ALIGNMENT INSTRUCTIONS

OSCILLATOR ALIGNMENT

Set the fine tuning at the center of its range. One slug for HIGH band adjustment is located at 1 o'clock, and should be adjusted first. The LOW band adjustment is located at 6 o'clock. Adjust for best picture and sound.

RF AND MIXER ALIGNMENT

This portion of the receiver has been properly aligned at the factory and is very stable. Alignment of this portion should not be required in the field.

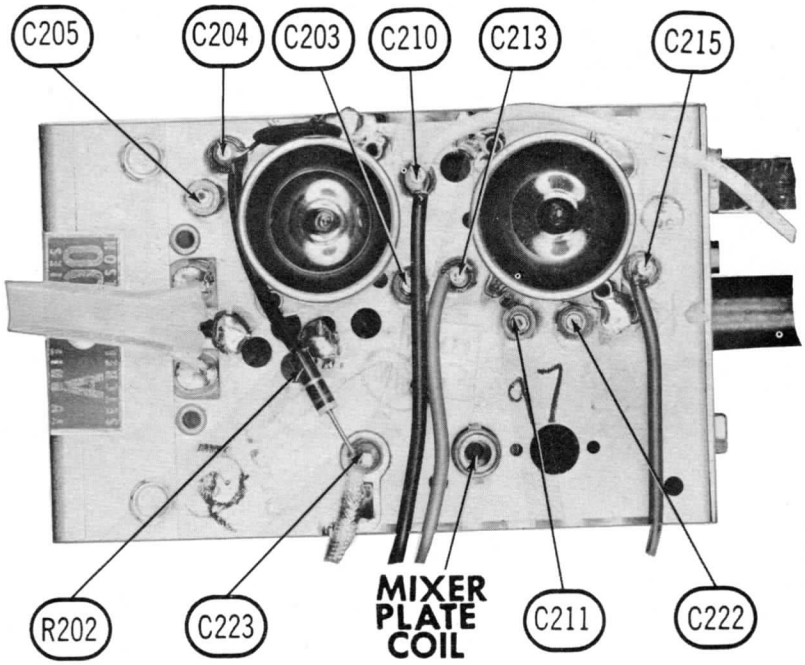

RF TUNER—TOP VIEW

ALIGNMENT INSTRUCTIONS

PRE-ALIGNMENT INSTRUCTIONS

The high voltage lead should be securely taped and kept away from the chassis.
Allow a 20 minute warm-up period for the receiver and test equipment.

VIDEO IF ALIGNMENT

Connect the negative lead of a 9 volt bias supply to point (A). Positive to chassis.
Connect the synchronized sweep voltage from the sweep generator to the horizontal input of the oscilloscope for horizontal deflection.
The sweep generator output lead should be terminated with its characteristic impedance, usually 50 ohms.
Use only enough sweep generator output to provide a usable pattern on scope.

	DUMMY ANTENNA	SWEEP GENERATOR COUPLING	SWEEP GENERATOR FREQUENCY	MARKER GENERATOR FREQUENCY	CHANNEL	CONNECT SCOPE	ADJUST	REMARKS
1.	.001mfd	High side to pin 1 (grid) of 6BZ6 (V3). Low side to chassis.	44MC (10MC Swp)	41.25MC 45.75MC 47.25MC	Any non-interfering channel	Vert. Amp. thru 10K to point (B). Low side to chassis. (Across Video Det. Load)	A1, A2, A3, A4	Adjust for maximum gain and symmetry of response similar to Fig. 1 with markers as shown. Adjust A3 to place 47.25MC marker in one trap notch and A4 to place 41.25MC marker in other trap notch.
2.	"	High side to pin 1 (grid) of 6BZ6 (V2). Low side to chassis.	"	41.25MC 45.75MC	"	"	A5, A6	Adjust for maximum gain and symmetry of response similar to Fig. 1 with markers as shown.
3.	"	High side to pin 1 (grid) of 6BZ6 (V1). Low side to chassis.	"	"	"	"	A7, A8	"
4.	Direct	Place a thin insulated metal strip between the mixer-osc. tube (V202), and tube shield. Connect the high side of sweep generator to the metal strip. Low side to chassis.	"	"	"	"	Mixer Plate Coil	Adjust for maximum gain and symmetry of response similar to Fig. 1 with markers as shown. Repeat steps 1 thru 4, if necessary.

SOUND IF ALIGNMENT

Connect two matched 100K (±1%) resistors in series from point (D) to chassis. The junction of these two resistors is alignment point (E) as shown on the schematic.

	DUMMY ANTENNA	SIGNAL GENERATOR COUPLING	SIGNAL GENERATOR FREQUENCY	CHANNEL	CONNECT VTVM	ADJUST	REMARKS
5.	.001mfd	High side to point (C). Low side to chassis.	4.5MC	Any non-interfering channel	DC probe to point (D). Common to chassis.	A9, A10	Adjust for maximum deflection.
6.	"	"	"	"	DC probe to point (E). Common to chassis.	All	Adjust for zero reading. A positive and negative reading will be obtained on either side of the correct setting.

TUNER ALIGNMENT INSTRUCTIONS LOCATED ON PAGE 6.

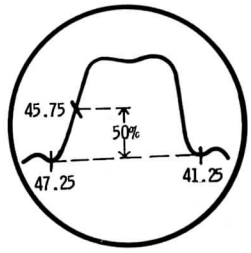

FIG. 1

PARTS LIST AND

TUBES (GENERAL ELECTRIC, SYLVANIA)

ITEM No.	USE	TYPE	NOTES
V1	1st. Video IF Amp.	6BZ6	
V2	2nd. Video IF Amp.	6BZ6	
V3	3rd. Video IF Amp.	6BZ6	
V4	Video Output-AGC Keying	6AW8A	
V5	Sound IF Amp.	6BZ6	
V6	Ratio Det. -AF Amp.	6BN8	
V7	Audio Output	6AQ5	

ITEM No.	USE	TYPE	NOTES
V8	Sync Sep.	6CS6	
V9	Vert. Mult.	12AU7A	
V10	Vert. Output	6CM6	
V11	Horiz. Mult.	12AU7A	
V12	Horiz. Output	6DQ6A	
V13	Damper	6AX4GT	
V14	HV Rect.	1B3GT	

PICTURE TUBE

ITEM No.	REPLACEMENT DATA				NOTES
	Setchell-Carlson PART No.	GENERAL ELECTRIC PART No.	RCA PART No.	SYLVANIA PART No.	
V15	17BJP4		17BJP4 ①	17BJP4 ②	① "Silverama" Ⓑ ② "Silver Screen 85"

ELECTROLYTIC CAPACITORS

ITEM No.	RATING		REPLACEMENT DATA						
	CAP.	VOLT.	Setchell-Carlson PART No.	AEROVOX PART No.	CORNELL-DUBILIER PART No.	MALLORY PART No.	PYRAMID PART No.	SANGAMO PART No.	SPRAGUE PART No.
C1	100	200		PRS250V100	BR10035	TC1265	TD-100-200	MT-25100	R2603 *
C2	100	200		PRS250V100	BR10035	TC1265	TD-100-200	MT-25100	R2603 *
C3A	▲40	350	C-101	AFH3-29-95	D0044	FP375.5	TMD-91	Q-012	R2247 *
B	■120	350			BR4035	TC78	TD-40-350	MT-4540	
C	▲40	350							
C4	20	150		PRS150V20	BBR20-150	TC45	TD-20-150	MT-1520	TVA-1410
C5	5	150		PRS150V4	BBR4-150	TC40	TD-4-150	MT-1504	TVA-1403
C6	100	50		PRS50V100	BR1005	TC3501	TD-100-50	MTH-5010	TVA-1310

* Non-catalog item.

FIXED CAPACITORS

Capacity values given in the rating column are in mfd. for Paper Capacitors, and in mmfd. for Mica and Ceramic Capacitors.

ITEM No.	RATING		REPLACEMENT DATA						NOTES
	CAP.	VOLT	Setchell-Carlson PART No.	AEROVOX PART No.	CENTRALAB PART No.	CORNELL-DUBILIER PART No.	MALLORY PART No.	SPRAGUE PART No.	
C7	.47	200		P288N-47		CUB2P47	GEM-2047	2TM-P47	①
C8	1000			BPD-001	DD-102	BYA6D1	DC521	5HK-D1	
C9	10000			BPD-01	DD-103	BYA6S1	DC511	5HK-S1	
C10	10000			BPD-01	DD-103	BYA6S1	DC511	5HK-S1	
C11	1.0			NPO-SI 1.0	TCZ-1			5TCCB-V1	
C12	1000			BPD-001	DD-102	BYA6D1	DC521	5HK-D1	
C13	1000			BPD-001	DD-102	BYA6D1	DC521	5HK-D1	
C14	1000			BPD-001	DD-102	BYA6D1	DC521	5HK-D1	
C15	.82								
C16	1000			BPD-001	DD-102	BYA6D1	DC521	5HK-D1	
C17	1000			BPD-001	DD-102	BYA6D1	DC521	5HK-D1	
C18	1000			BPD-001	DD-102	BYA6D1	DC521	5HK-D1	
C19	1.5			NPO-SI 1.5	TCZ-1R5	C10V15C	ZT-5515	5TCCB-V15	
C20	70								10%
C21	1.0			NPO-SI 1.0	TCZ-1			5TCCB-V1	
C22	270			1468-00027	D6-271	5W5T27	UC-5327	1FM-327	
C23	.1	400		P488N-1	DF-104	CUB4P1	GEM-401	4TM-P1	
C24	5000	1000		DAC-9	MD-502	BYA10D5		5GA-D5	
C25	10			SI 10	D6-100	LT6Q1	UC-541	5GA-Q1	
C26	56			1468-000056	D6-560	5W5Q56	UC-5456	1FM-456	
C27	10000			BPD-01	DD-103	BYA6S1	DC511	5HK-S1	
C28	10000			BPD-01	DD-103	BYA6S1	DC511	5HK-S1	
C29	1000			BPD-001	DD-102	BYA6D1	DC521	5HK-D1	
C30	1000			BPD-001	DD-102	BYA6D1	DC521	5HK-D1	
C31	10000			BPD-01	DD-103	BYA6S1	DC511	5HK-S1	
C32	10000			BPD-01	DD-103	BYA6S1	DC511	5HK-S1	
C33	10000			BPD-01	DD-103	BYA6S1	DC511	5HK-S1	
C34	10000			BPD-01	DD-103	BYA6S1	DC511	5HK-S1	
C35	10000			BPD-01	DD-103	BYA6S1	DC511	5HK-S1	
C36	1000			BPD-001	DD-102	BYA6D1	DC521	5HK-D1	
C37	10000			BPD-01	DD-103	BYA6S1	DC511	5HK-S1	
C38	10000			BPD-01	DD-103	BYA6S1	DC511	5HK-S1	
C39	10000			BPD-01	DD-103	BYA6S1	DC511	5HK-S1	
C40	10000			BPD-01	DD-103	BYA6S1	DC511	5HK-S1	
C41	1000			BPD-001	DD-102	BYA6D1	DC521	5HK-D1	
C42	.0033	400					GEM-16233		10%
C43	.22	400		P488N-22		CUB4P22	GEM-4022	4TM-P22	
C44	10000			BPD-01	DD-103	BYA6S1	DC511	5HK-S1	
C45	.1	400		P488N-1	DF-104	CUB4P1	GEM-401	4TM-P1	
C46	.047	400		P488N-047	DF-503	CUB4S47	GEM-4147	4TM-S47	
C47	10000			BPD-01	DD-103	BYA6S1	DC511	5HK-S1	
C48	10000			BPD-01	DD-103	BYA6S1	DC511	5HK-S1	
C49	100			1469-0001	DD-101	22R5T1	MCB231	MS-31	10%
C50	100			1469-0001	DD-101	22R5T1	MCB231	MS-31	10%
C51	1000			BPD-001	DD-102	BYA6D1	DC521	5HK-D1	
C52	.0033	400					GEM-16233		10%
C53	.1	200		P288N-1	DF-104	CUB2P1	GEM-201	2TM-P1	
C54	100			1469-0001	DD-101	22R5T1	MCB231	MS-31	10%
C55	680			1464-00068	D6-681	5R5T68		MS-368	10%
C56	10000			BPD-01	DD-103	BYA6S1	DC511	5HK-S1	
C57	680			1464-00068	D6-681	5R5T68		MS-368	10%
C58	.0033	400					GEM-16233		10%
C59	100			1469-0001	DD-101	22R5T1	MCB231	MS-31	10%
C60	1000			BPD-001	DD-102	BYA6D1	DC521	5HK-D1	
C61	.1	400		P488N-1	DF-104	CUB4P1	GEM-401	4TM-P1	
C62	.1	400		P488N-1	DF-104	CUB4P1	GEM-401	4TM-P1	
C63	.0033	400					GEM-16233		10%
C64	10000			BPD-01	DD-103	BYA6S1	DC511	5HK-S1	
C65	1000			BPD-001	DD-102	BYA6D1	DC521	5HK-D1	
C66	1000			BPD-001	DD-102	BYA6D1	DC521	5HK-D1	
C67	10000			BPD-01	DD-103	BYA6S1	DC511	5HK-S1	

① Not used in some versions.

CONT

ITEM No.	RATING		REPLACEMENT		
	RESIST-ANCE	WATTS	Setchell-Carlson PART No.	CENTRALAB PART No.	CLAROSTA PART No
R1A	2meg	½	VR-808	B-76	A47-2meg-
B	Shaft			Not Req.	FS-3
C	Switch			KR-1 or KB-1*	SWE-12
R2A	450Ω	½	VR-809	B-4	A47-500-S
B	Shaft			Not Req.	FS-3
R3A	2.5meg	½	VR-803	BX-83	A47-2.5me -S
B	Shaft			Not Req.	FKS-1/4
R4A	2.5meg	½	VR-803	BX-83	A47-2.5me -S
B	Shaft			Not Req.	FKS-1/4
R5A	2.5meg	½	VR-803	BX-83	A47-2.5me -S
B	Shaft			Not Req.	FKS-1/4
R6A	3000Ω	½	VR-801	AB-8	A47-3000-S
B	Shaft			AK-1	FKS-1/4
R7A	2.5meg	½	VR-803	BX-83	A47-2.5me -S
B	Shaft			Not Req.	FKS-1/4
R8	50Ω	2(WW)	VR-813		

* Use KR with CRL "red label" and KB with "blue label" control

RESIST

All wattages 1/2 watt, or less

ITEM No.	RATING		Setchell-Carlson PART No.	NOTES
	OHMS	WATT		
R9	470Ω			
R10	470Ω			
R11	220K			
R12	4700Ω			
R13	3900Ω			
R14	4700Ω			
R15	10K	1		
R16	82Ω			
R17	470Ω			
R18	8200Ω			
R19	470Ω			
R20	15K			Note 1
R21	120Ω			
R22	3900Ω			
R23	470Ω			
R24	5600Ω	2		
R25	4.7meg			
R26	220K			
R27	220K			
R28	5600Ω			
R29	180Ω			
R30	180Ω			
R31	82Ω			
R32	180Ω			
R33	47K			
R34	4.7meg			
R35	22K			
R36	470K			
R37	1meg			
R38	330Ω	1		
R39	8200Ω			
R40	2.2meg			
R41	47K			
R42	2.2meg			
R43	22K			
R44	47K	2		
R45	33K			

Note 1. Not used in some versions
Note 2. Some versions may use 2

TRANSFORM

ITEM No.	RATING			Setchell-Carlson PART No.	Halldorso PART No
	PRI.	SEC. 1	SEC. 2		
T1	117VAC @1.19A	105VAC @.230A	6.3VAC @8.5A	T-125	

TRANSFORMERS (S

ITEM No.	USE	REP		
		Setchell-Carlson PART No.	Halldorson PART No.	Merit PART No
T2	Vert. Output	T-101		A-3038 ①
T3A	Yoke-Horiz. (20MH)	Y-104 ③	DF607	MDF-92
B	(90°)-Vert. (40MH)		④⑤	④⑤
M9	Rear Cover & Centering Device	Y-105		
	Yoke Clamp	Y-106		
T4	Horiz. Output	T-132		

① Connect as autoformer (red to yellow). Connect red and ye socket and pin 1 of vert. output tube (V10).
② Drill new mounting hole(s).
③ Does not include leads, damping network or rear cover ar
④ Use original rear cover and centering device, mount with
⑤ Use original yoke damping network.

TRANSFORMER (A

ITEM No.	IMPEDANCE		REPLACEMEN			
	PRI.	SEC.	Setchell-Carlson PART No.	Halldorson PART No.	Merit PART No.	R PAR
T5	5100Ω	3-4Ω	T-102	Z1001	A-2930	

PARTS LIST AND DESCRIPTIONS

CONTROLS

ITEM No.	RATING RESIST-ANCE	RATING WATTS	Setchell-Carlson PART No.	CENTRALAB PART No.	CLAROSTAT PART No.	IRC PART No.	MALLORY PART No.	INSTALLATION NOTES
R1A	2meg	½	VR-808	B-76	A47-2meg-Z	Q13-139	U55	Volume
B	Shaft			Not Req.	FS-3	Not Req.	Not Req.	
C	Switch			KR-1 or KB-1*	SWE-12	76-1	US-26	
R2A	450Ω	½	VR-809	B-4	A47-500-S	Q11-103	U2	Contrast
B	Shaft			Not Req.	FS-3	Not Req.	Not Req.	
R3A	2.5meg	½	VR-803	BX-83	A47-2.5meg -S	B11-239	SU-565	Vert. Hold
B	Shaft			Not Req.	FKS-1/4	SK3	Not Req.	
R4A	2.5meg	½	VR-803	BX-83	A47-2.5meg -S	B11-239	SU-565	Brightness
B	Shaft			Not Req.	FKS-1/4	SK3	Not Req.	
R5A	2.5meg	½	VR-803	BX-83	A47-2.5meg -S	B11-239	SU-565	Horiz. Hold
B	Shaft			Not Req.	FKS-1/4	SK3	Not Req.	
R6A	3000Ω	½	VR-801	AB-8	A47-3000-S	B11-112	SU-8	Height Top
B	Shaft			AK-1	FKS-1/4	SK3	Not Req.	
R7A	2.5meg	½	VR-803	BX-83	A47-2.5meg -S	B11-239	SU-565	Height Bottom
B	Shaft			Not Req.	FKS-1/4	SK3	Not Req.	
R8	50Ω	2(WW)	VR-813					Horiz. Centering

* Use KR with CRL "red label" and KB with "blue label" controls.

RESISTORS

All wattages 1/2 watt, or less, unless otherwise listed.

ITEM No.	RATING OHMS	RATING WATT	Setchell-Carlson PART No.	NOTES
R9	470Ω			
R10	470Ω			
R11	220K			
R12	4700Ω			
R13	3900Ω			
R14	4700Ω			
R15	10K	1		
R16	82Ω			
R17	470Ω			
R18	8200Ω			
R19	470Ω			
R20	15K			Note 1
R21	120Ω			
R22	3900Ω			
R23	470Ω			
R24	5600Ω	2		
R25	4.7meg			
R26	220K			
R27	220K			
R28	5600Ω			
R29	180Ω			
R30	180Ω			
R31	82Ω			
R32	180Ω			
R33	47K			
R34	4.7meg			
R35	22K			
R36	470K			
R37	1meg			
R38	330Ω	1		
R39	8200Ω			
R40	2.2meg			
R41	47K			
R42	2.2meg			
R43	22K			
R44	47K	2		
R45	33K			

ITEM No.	RATING OHMS	RATING WATT	Setchell-Carlson PART No.	NOTES
R46	8200Ω			
R47	4700Ω			
R48	220K			
R49	1meg			
R50	1meg			
R51	4700Ω			
R52	8200Ω			
R53	4.7meg			
R54	47K			
R55	470Ω			
R56	22K			
R57	22K			
R58	470Ω			
R59	470Ω			
R60	100K			
R61	100K			
R62	470K			
R63	68K			
R64	2.2meg			
R65	100K			
R66	27K	2		
R67	68K			
R68	15K			
R69	1200Ω			
R70	22K			
R71	1meg			Note 2
R72	82Ω			
R73	27K	2		
R74	27K	2		
R75	68K			Note 1
R76	3900Ω			
R77	470K			
R78	2.2Ω			
R79	8200Ω			
R80	2000Ω	7		
R81	300Ω	10		
R82	2Ω	5	R-105	

Note 1. Not used in some versions.
Note 2. Some versions may use 2.2meg in this application.

TRANSFORMER (POWER)

ITEM No.	RATING PRI.	RATING SEC. 1	RATING SEC. 2	Setchell-Carlson PART No.	Halldorson PART No.	Merit PART No.	Ram PART No.	Stancor PART No.	Thordarson PART No.	Triad PART No.
T1	117VAC @1.19A	105VAC @.230A	6.3VAC @8.5A	T-125						

TRANSFORMERS (SWEEP CIRCUITS)

ITEM No.	USE	Setchell-Carlson PART No.	Halldorson PART No.	Merit PART No.	Ram PART No.	Stancor PART No.	Thordarson PART No.	Triad PART No.	NOTES
T2	Vert. Output	T-101		A-3038 ①	V309 ①	VO-100 ②	26S13 ②		
T3A	Yoke-Horiz. (20MH)	Y-104 ③	DF607	MDF-92	Y90F19/43	DY-16A	Y-16	Y-41 &	
B	(90°)-Vert. (40MH)		④⑤	④⑤	④⑤	④⑤	④⑤	NW20 ④	
M9	Rear Cover & Centering Device	Y-105							
	Yoke Clamp	Y-106							
T4	Horiz. Output	T-132							

① Connect as autoformer (red to yellow). Connect red and yellow leads to pin 6 of yoke socket. Green lead to pin 1 of yoke socket and pin 1 of vert. output tube (V10).
② Drill new mounting hole(s).
③ Does not include leads, damping network or rear cover and centering device.
④ Use original rear cover and centering device, mount with lead out top and connect same as original.
⑤ Use original yoke damping network.

TRANSFORMER (AUDIO OUTPUT)

ITEM No.	IMPEDANCE PRI.	IMPEDANCE SEC.	Setchell-Carlson PART No.	Halldorson PART No.	Merit PART No.	Ram PART No.	Stancor PART No.	Thordarson PART No.	Triad PART No.	NOTES
T5	5100Ω	3-4Ω	T-102	Z1001	A-2930		A-3877	24S51	S-3X	

ITEM No.	TYPE SIZE	TYPE FIELD	TYPE V. C. IMP.	REPLACE Setchell-Carlso PART No.
SP1	6"	PM	3-4Ω	W-100

ITEM No.	USE	Setchell-Carlson PART No.
L1	1st. Video IF	T-128
L2	2nd. Video IF	T-128
L3	41.25MC Trap	T-131
L4	3rd. Video IF	T-129
L5A	47.25MC Trap	T-127
B	Sound IF	
L6	Series Peaking Coil	L-101
L7	Series Peaking Coil	L-110
L8	Shunt Peaking Coil	L-102
L9	Ratio Det.	T-104
L10	Line Choke	

* Parallel with a 22K resistor.

ITEM No.	RATING CURRENT (Measured)	Setchell-Carlson PART No.	FEDI PART
M1	.190A		
M2	.190A		

ITEM No.	TYPE	RATING	Setchell-Carlson PART No. FUSE	HOLD
M3	3AG	2A 250V		

CR

ITEM No.	ORIG. TYPE	REPLACEMENT Setchell-Carlson PART No.	CBS PART No.
M4	1N60		1N60
M5	1N60		1N60
M6	1N60		1N60

MISC

ITEM No.	PART NAME	Setchell-Carlson PART No.
M7	Lamp	
M8	Tuner	57-B-48
M9	Centering Device	Y-105

CABIN

(When Ordering Cabinet

NAME	PART NO.
Safety Glass	GM-100
Knob	K-102
Knob	K-133
Knob	K-137
Dial	K-130
Dial	K-135
Dial	K-134

High Voltage Lead .....
Shielded Hook-up Wire .....

General-use Unshielded Hook-up Wire ...

Power Cord (Interlock Type).....
300Ω Tuner Input Lead .....
300Ω Antenna Lead-in .....
Antenna Rotor Cable.....

DESCRIPTIONS

OLS

DATA	IRC PART No.	MALLORY PART No.	INSTALLATION NOTES
	Q13-139	U55	Volume
	Not Req.	Not Req.	
	76-1	US-26	
	Q11-103	U2	Contrast
	Not Req.	Not Req.	
	B11-239	SU-565	Vert. Hold
	SK3	Not Req.	
	B11-239	SU-565	Brightness
	SK3	Not Req.	
	B11-239	SU-565	Horiz. Hold
	SK3	Not Req.	
	B11-112	SU-8	Height Top
	SK3	Not Req.	
	B11-239	SU-565	Height Bottom
	SK3	Not Req.	Horiz. Centering

ORS

unless otherwise listed.

ITEM No.	RATING OHMS	RATING WATT	Setchell-Carlson PART No.	NOTES
R46	8200Ω			
R47	4700Ω			
R48	220K			
R49	1meg			
R50	1meg			
R51	4700Ω			
R52	8200Ω			
R53	4.7meg			
R54	47K			
R55	470Ω			
R56	22K			
R57	22K			
R58	470Ω			
R59	470Ω			
R60	100K			
R61	100K			
R62	470K			
R63	68K			
R64	2.2meg			
R65	100K			
R66	27K	2		
R67	68K			
R68	15K			
R69	1200Ω			
R70	22K			
R71	1meg			Note 2
R72	82Ω			
R73	27K	2		
R74	27K	2		
R75	68K			Note 1
R76	3900Ω			
R77	470K			
R78	2.2Ω			
R79	8200Ω			
R80	2000Ω	7		
R81	300Ω	10		
R82	2Ω	5	R-105	

1meg in this application.

R (POWER)

REPLACEMENT DATA					
	Merit PART No.	Ram PART No.	Stancor PART No.	Thordarson PART No.	Triad PART No.

WEEP CIRCUITS)

ACEMENT DATA					NOTES
	Ram PART No.	Stancor PART No.	Thordarson PART No.	Triad PART No.	
	V309 ① Y90F19/43 ④⑤	VO-100 ② DY-16A ④⑤	26S13 ② Y-16 ④⑤	Y-41 & NW20 ④	

low leads to pin 6 of yoke socket. Green lead to pin 1 of yoke

l centering device.
ead out top and connect same as original.

UDIO OUTPUT)

T DATA				NOTES
m No.	Stancor PART No.	Thordarson PART No.	Triad PART No.	
	A-3877	24S51	S-3X	

SPEAKER

ITEM No.	TYPE SIZE	TYPE FIELD	TYPE V. C. IMP.	REPLACEMENT DATA Setchell-Carlson PART No.	REPLACEMENT DATA QUAM PART No.	NOTES
SP1	6"	PM	3-4Ω	W-100	6A15	

COILS (RF-IF)

ITEM No.	USE	REPLACEMENT DATA Setchell-Carlson PART No.	Meissner PART No.	Merit PART No.	Miller PART No.	Ram PART No.	NOTES
L1	1st. Video IF	T-128					
L2	2nd. Video IF	T-128					
L3	41.25MC Trap	T-131					
L4	3rd. Video IF	T-129					
L5A	47.25MC Trap	T-127					
B	Sound IF						
L6	Series Peaking Coil	L-101	19-4250	TV-187	6173	VP-6 *	225 Microhenries, wound on a 22K resistor
L7	Series Peaking Coil	L-110	19-4400 *	TV-202*	6136 *		400 Microhenries, wound on a 22K resistor
L8	Shunt Peaking Coil	L-102	19-3300 *	TV-199 *	6155 *		300 Microhenries, wound on a 22K resistor
L9	Ratio Det.	T-104	17-3497	TV-115	6205	SD-4	
L10	Line Choke						1.5 Microhenries

* Parallel with a 22K resistor.

RECTIFIERS

ITEM No.	RATING CURRENT (Measured)	REPLACEMENT DATA Setchell-Carlson PART No.	FEDERAL PART No.	GENERAL ELECTRIC PART No.	INTERNATIONAL PART No.	SARKES TARZIAN PART No.	NOTES
M1	.190A			1N1005 ①	SD94A	M500 ②	① Germanium type.
M2	.190A			1N1005 ①	SD94A	M500 ②	② Silicon type.

FUSES

ITEM No.	TYPE	RATING	REPLACEMENT DATA Setchell-Carlson PART No. FUSE	Setchell-Carlson PART No. HOLDER	LITTELFUSE PART No. FUSE	LITTELFUSE PART No. HOLDER	BUSS PART No. FUSE	BUSS PART No. HOLDER
M3	3AG	2A 250V			312002. (3AG-2A-250V)	342003	AGC2	HKP-CC

CRYSTAL DIODES

ITEM No.	ORIG. TYPE	REPLACEMENT DATA Setchell-Carlson PART No.	CBS PART No.	SYLVANIA PART No.	NOTES
M4	1N60		1N60	1N60	Video Det. (Pigtail)
M5	1N60		1N60	1N60	Horiz. AFC (Pigtail)
M6	1N60		1N60	1N60	Horiz. AFC (Pigtail)

MISCELLANEOUS

ITEM No.	PART NAME	Setchell-Carlson PART No.	NOTES
M7	Lamp		#47
M8	Tuner	57-B-48	VHF
M9	Centering Device	Y-105	Includes yoke rear cover

CABINETS & CABINET PARTS

(When Ordering Cabinets & Cabinet Parts, Specify Model, Chassis & Color)

NAME	PART NO.	DESCRIPTION
Safety Glass	GM-100	
Knob	K-102	Volume, Contrast
Knob	K-133	Channel Selector
Knob	K-137	Channel Selector, UHF-VHF Models
Dial	K-130	Rim, Fine Tuning, Contrast
Dial	K-135	Rim, Fine Tuning, UHF-VHF Models
Dial	K-134	Rim, Calibrated UHF, UHF-VHF Models

WIRING DATA

High Voltage Lead ..... Use BELDEN No. 8869
Shielded Hook-up Wire ..... Use BELDEN No. 8885 (Single Conductor)
8738 (Two Conductor)
General-use Unshielded Hook-up Wire ..... Use BELDEN No. 8530 (Solid) Available in Ten Colors
8524 (Stranded) Available in Ten Colors
Power Cord (Interlock Type) ..... Use BELDEN No. 8874
300Ω Tuner Input Lead ..... Use BELDEN No. 8225
300Ω Antenna Lead-in ..... Use BELDEN No. 8230 or 8275
Antenna Rotor Cable ..... Use BELDEN No. 8464 (Flat) or 8484 (Round) - 4 Conductor
8485 (Round) - 5 Conductor
8488 (Round) - 8 Conductor

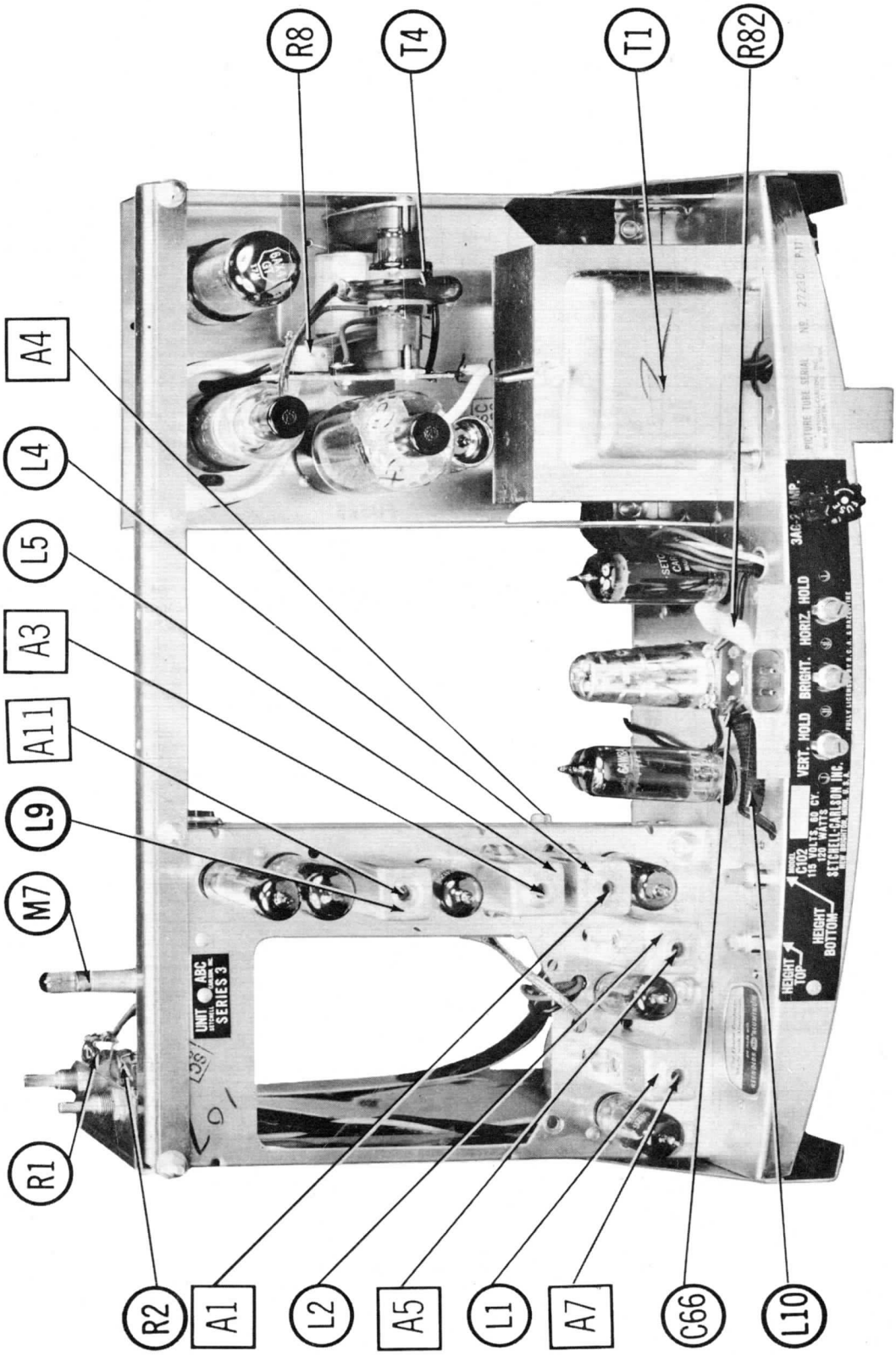

CHASSIS TOP VIEW

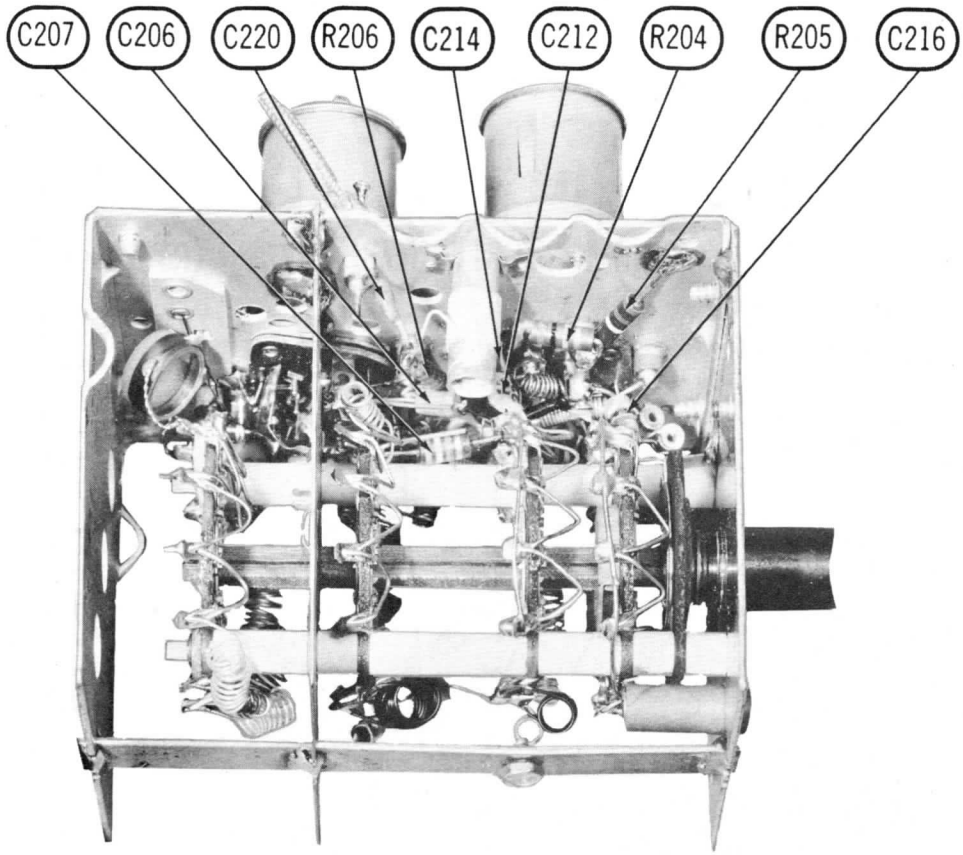

RF TUNER-LEFT SIDE

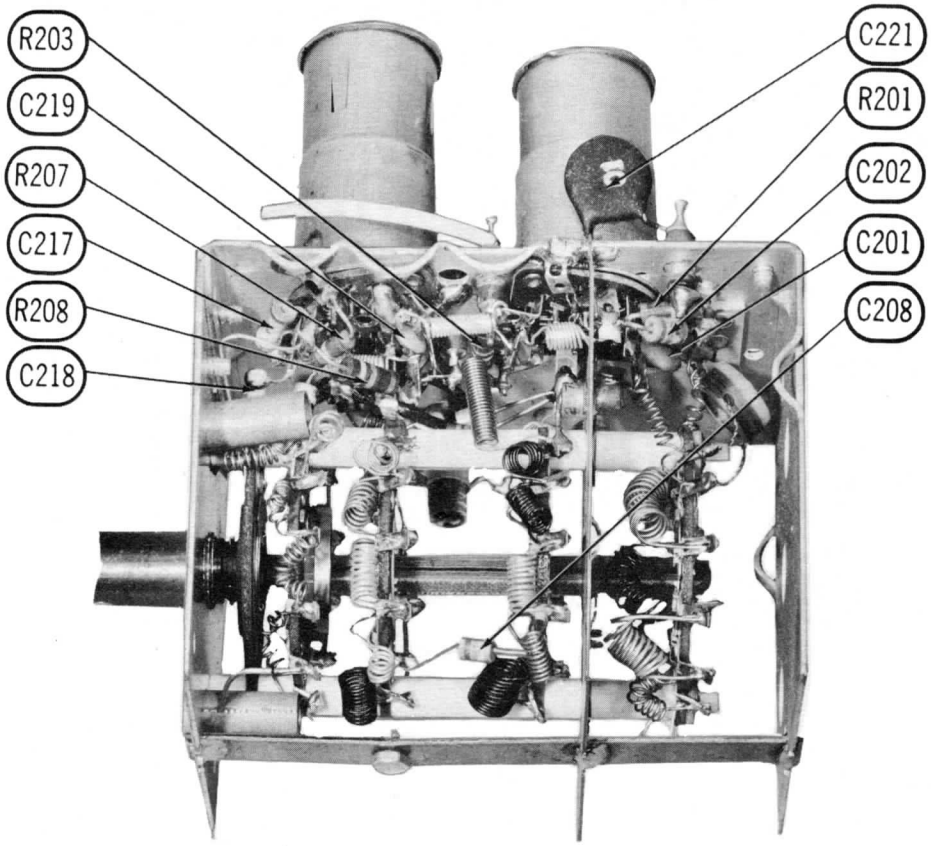

RF TUNER-RIGHT SIDE

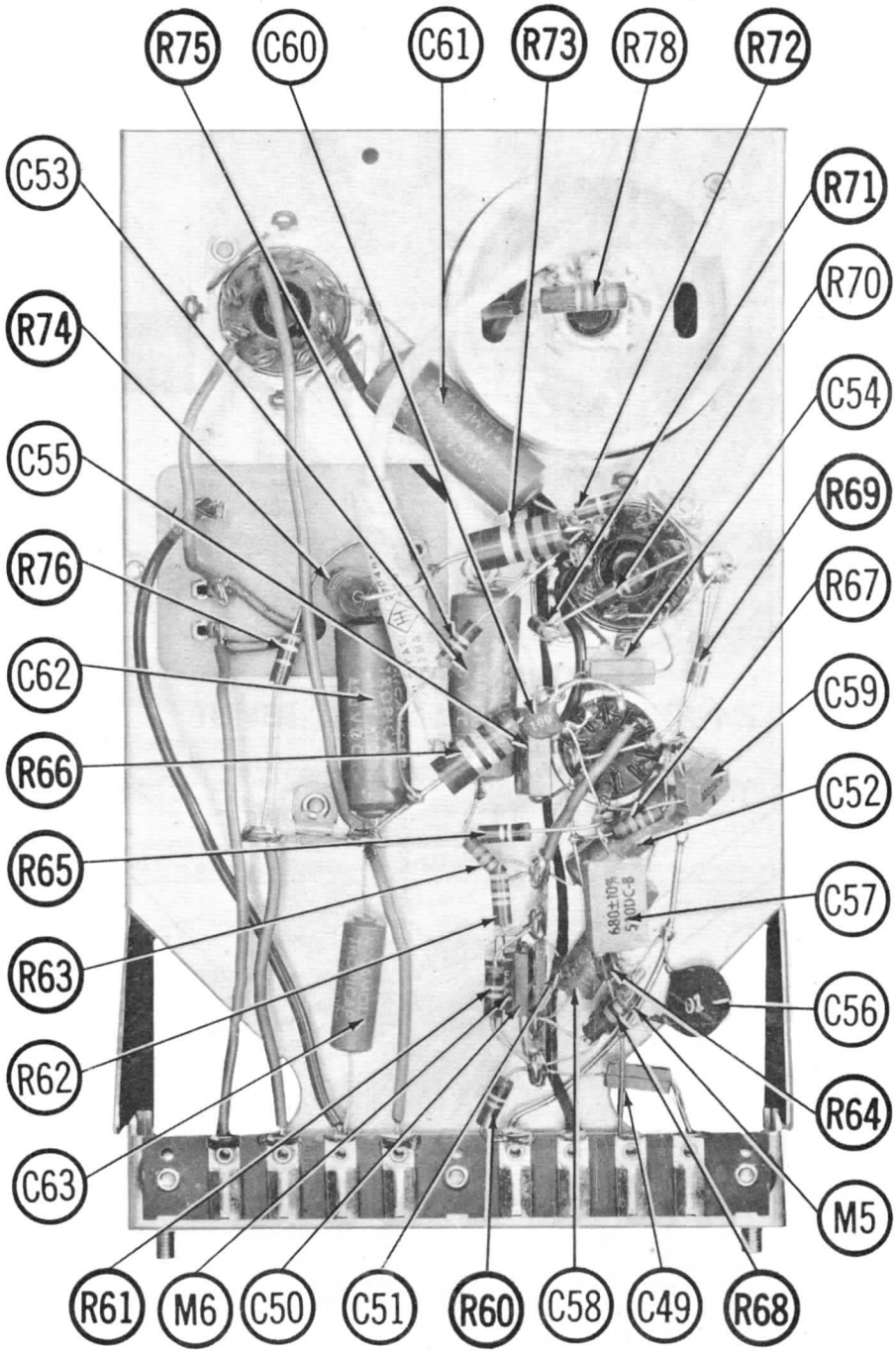

HORIZ SUB CHASSIS

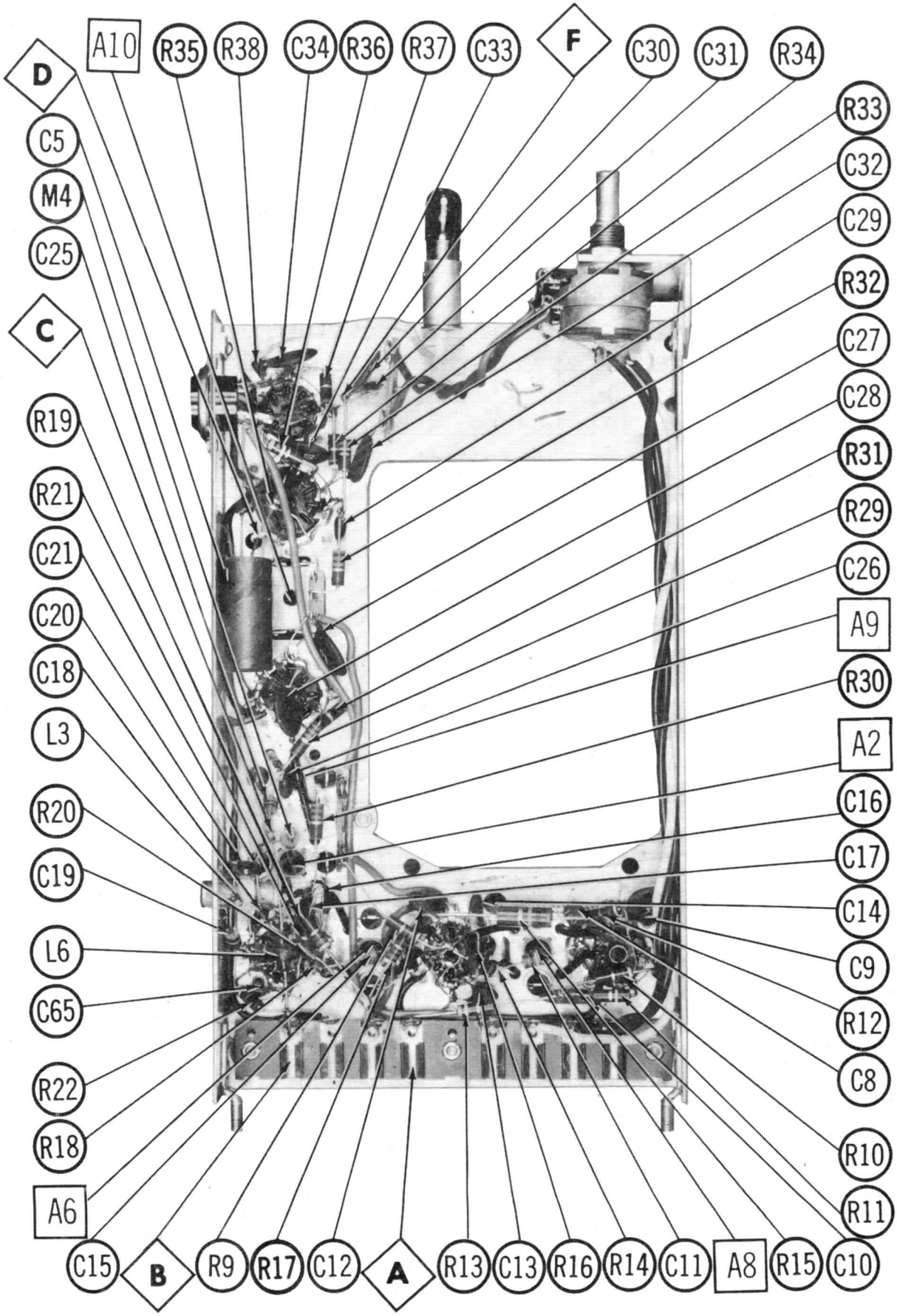

IF SUB CHASSIS

RESISTANCE MEASUREMENTS

ITEM	TUBE	Pin 1	Pin 2	Pin 3	Pin 4	Pin 5	Pin 6	Pin 7	Pin 8	Pin 9
V1	6BZ6	220K	4700Ω	0Ω	.1Ω	† 10K	† 10K	4700Ω		
V2	6BZ6	▲ .1Ω	▲ 82Ω	0Ω	.1Ω	† 770Ω	† 770Ω	INF		
V3	6BZ6	▰ 120Ω	INF	.1Ω	0Ω	† 770Ω	† 15K	INF		
V4	6AW8A	†† 0Ω	†† 5600Ω	440K	.1Ω	0Ω	• 95Ω	4400Ω	†† 5600Ω	† 5900Ω
V5	6BZ6	180Ω	82Ω	.1Ω	0Ω	▰ 300Ω	▰ 300Ω	0Ω		
V6	6BN8	INF	22Ω	INF	.1Ω	0Ω	0Ω	† 470K	4.7meg	0Ω
V7	6AQ5	1meg	330Ω	.1Ω	0Ω	† 2400Ω	† 2000Ω	1meg		
V8	6CS6	† 2.2meg	0Ω	.1Ω	0Ω	† 69K	† 47K	2.2meg		
V9	12AU7A	† 220K	4700Ω	4700Ω	.1Ω	.1Ω	• † 1.8meg	• 1.6meg	4700Ω	0Ω
V10	6CM6	† 550Ω	NC	4.7meg	0Ω	.1Ω	4.7meg	• 900Ω	NC	† 890Ω
V11	12AU7A	† 100K	68K	1200Ω	.1Ω	.1Ω	† 27K	520K	1200Ω	0Ω
V12	6DQ6A	NC	.1Ω	TP	† 68K	1meg	NC	0Ω	0Ω	TOP CAP ‡ 23Ω
V13	6AX4GT	NC	NC	¶ 250K	NC	† 300Ω	NC	0Ω	.1Ω	
V14	1B3GT	PINS 1 THRU 8 HAVE INFINITE RESISTANCE								TOP CAP ‡ 245Ω
V15	17BJP4	0Ω	22K	Pin 6 † 300Ω	Pin 10 ‡ 470K	Pin 11 • 500K	Pin 12 .1Ω			
V201	6BC8	† 300Ω	INF	INF	.1Ω	0Ω	INF	5meg	0Ω	0Ω
V202	6CL8	15K	▲ 5200Ω	0Ω	.1Ω	0Ω	▲ 470Ω	▲ 2700Ω	0Ω	230K
ITEM	TUBE	Pin 1	Pin 2	Pin 3	Pin 4	Pin 5	Pin 6	Pin 7	Pin 8	Pin 9

¶ THIS READING MAY VARY DEPENDING UPON THE CONDITION OF THE ELECTROLYTIC CAPACITOR CONNECTED IN THE ASSOCIATED CIRCUIT.
• THIS READING WILL VARY. CONTROL SET FOR NORMAL OPERATION.
▲ MEASURED FROM PIN 7 OF V2.
▰ MEASURED FROM PIN 7 OF V3.
† MEASURED FROM OUTPUT OF M2.
†† MEASURED FROM 120V SOURCE.
‡ MEASURED FROM PIN 3 OF V3.
NC NO CONNECTION.
TP TIE POINT.

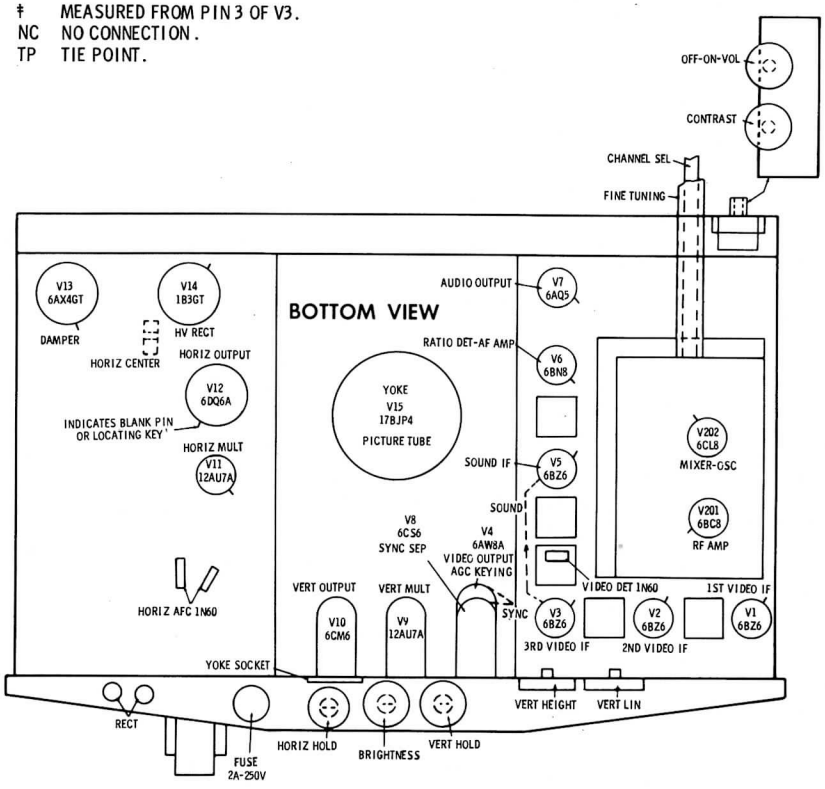

TUBE PLACEMENT CHART

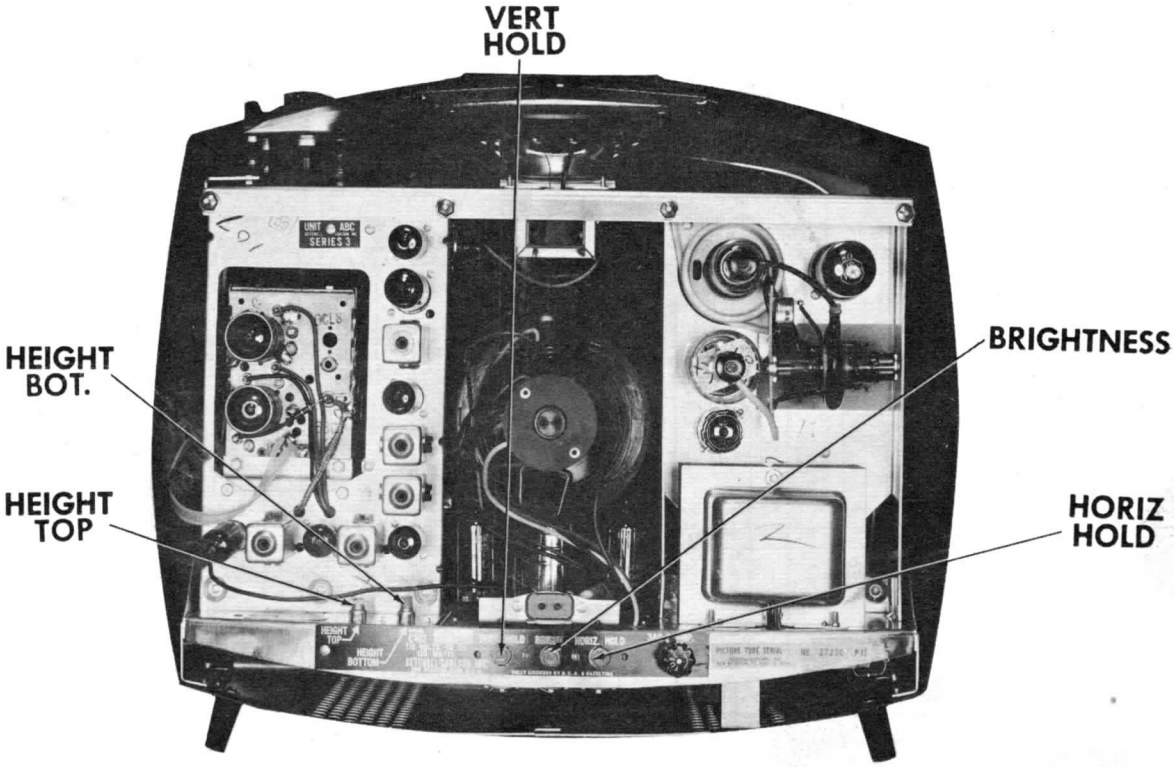

CABINET—REAR VIEW

HORIZONTAL SWEEP CIRCUIT ADJUSTMENTS

Turn the set on and tune in a TV station. Adjust the Horizontal Hold control until the picture synchronizes horizontally. If the control must be turned to either extreme to sync the picture, or if slow warm-up causes frequency drift, replace the 12AU7A (V11) and readjust the Horizontal Hold control.