STROMBERG-CARLSON MODELS
16 Series, 17 Series, 116 Series

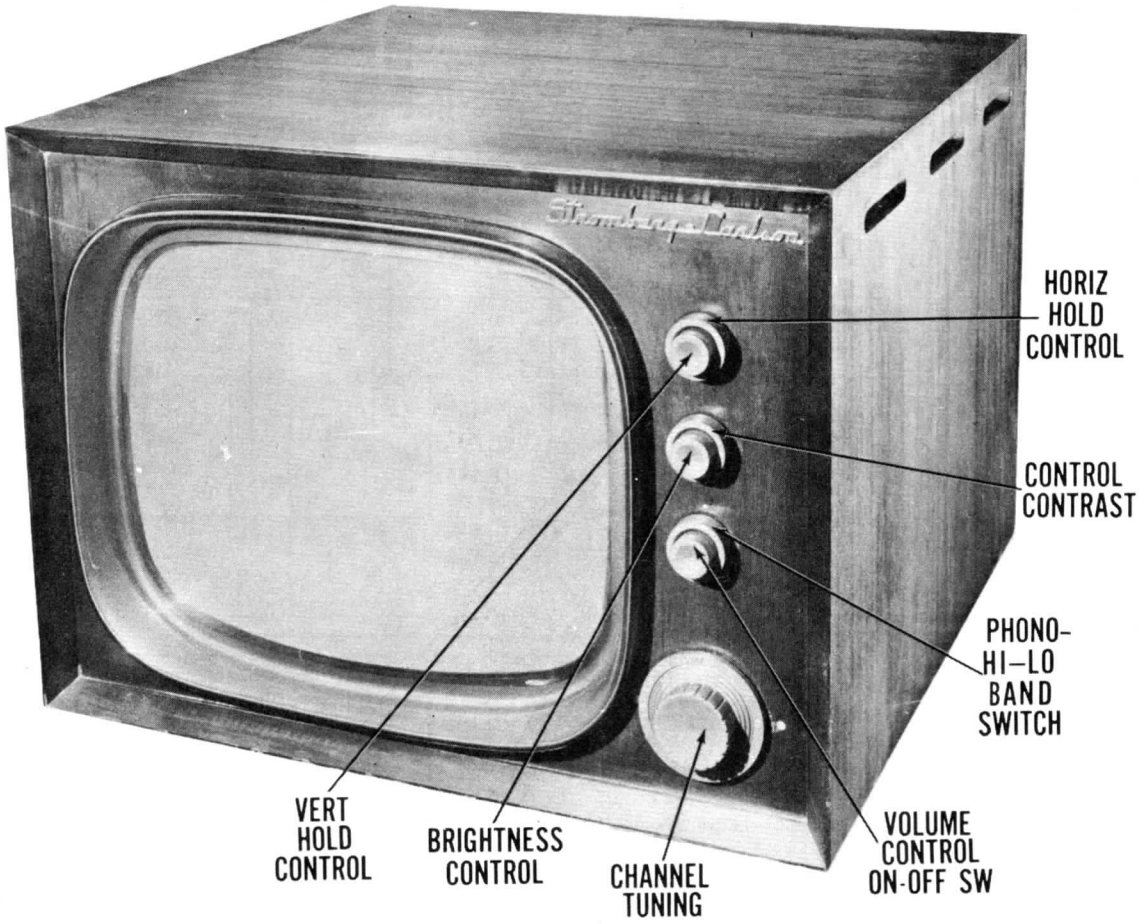

STROMBERG-CARLSON MODELS
16 Series, 17 Series, 116 Series

STROMBERG-CARLSON MODEL 17TM

TRADE NAME	Stromberg-Carlson, Models 16 Series, 17 Series, 116 Series (TV Chassis Only)
MANUFACTURER	Stromberg-Carlson Co., 100 Carlson Rd., Rochester (3), N. Y.
TYPE SET	Televsision Receiver (Some models TV-Radio - Phono Combinations)
TUBES	Twenty Six
POWER SUPPLY	110-120 Volts AC-60 Cycle — RATING 2.3 Amp. @ 117 Volts AC
TUNING RANGE–	Channels 2 thru 13

INDEX

MODEL 16RP - RADIO CHASSIS 112037 - SEE PHOTOFACT FOLDER 23 - SET 58
MODELS 17RP AND 116RP - RADIO CHASSIS 112108

HOWARD W. SAMS & CO., INC. • Indianapolis 1, Indiana

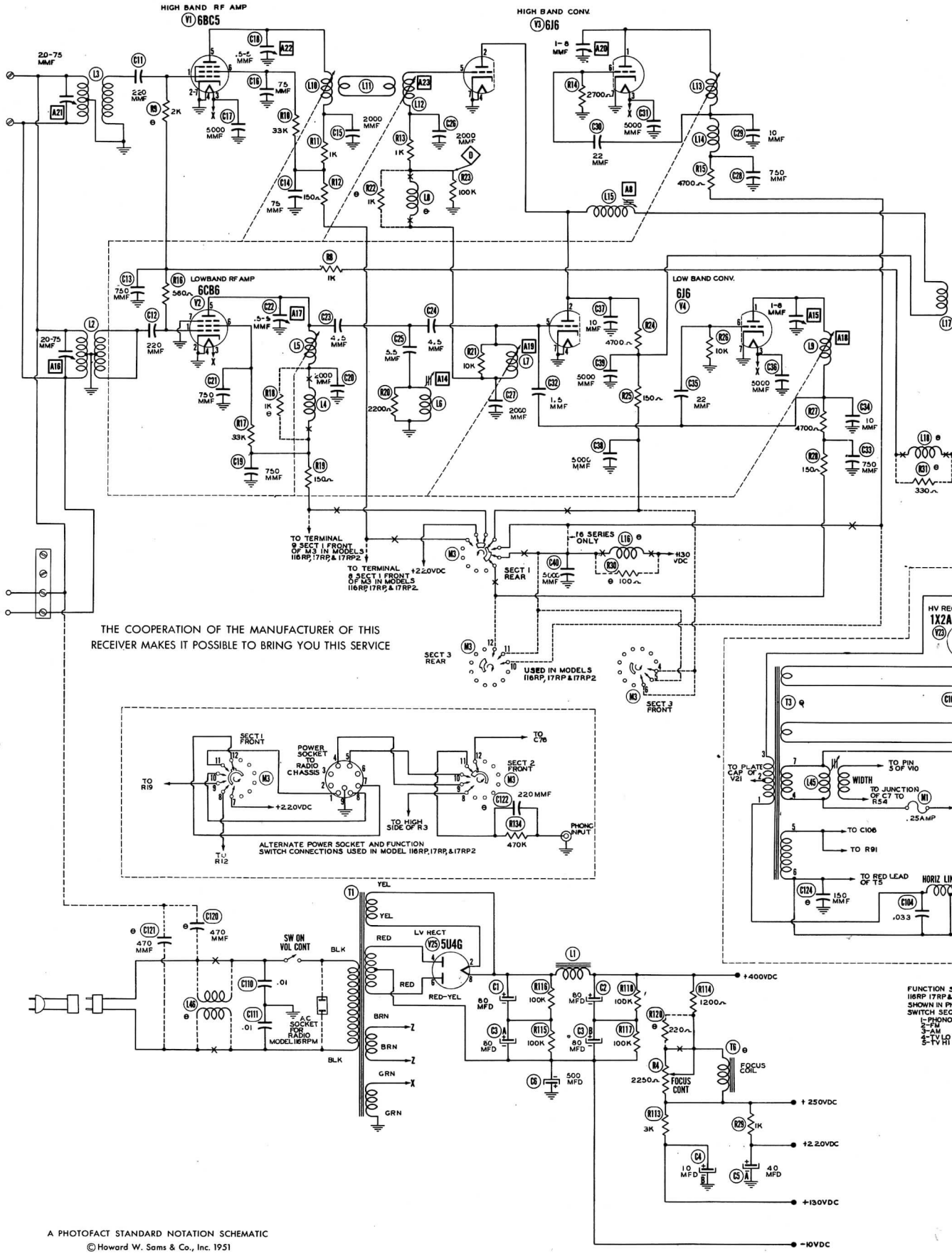

A PHOTOFACT STANDARD NOTATION SCHEMATIC

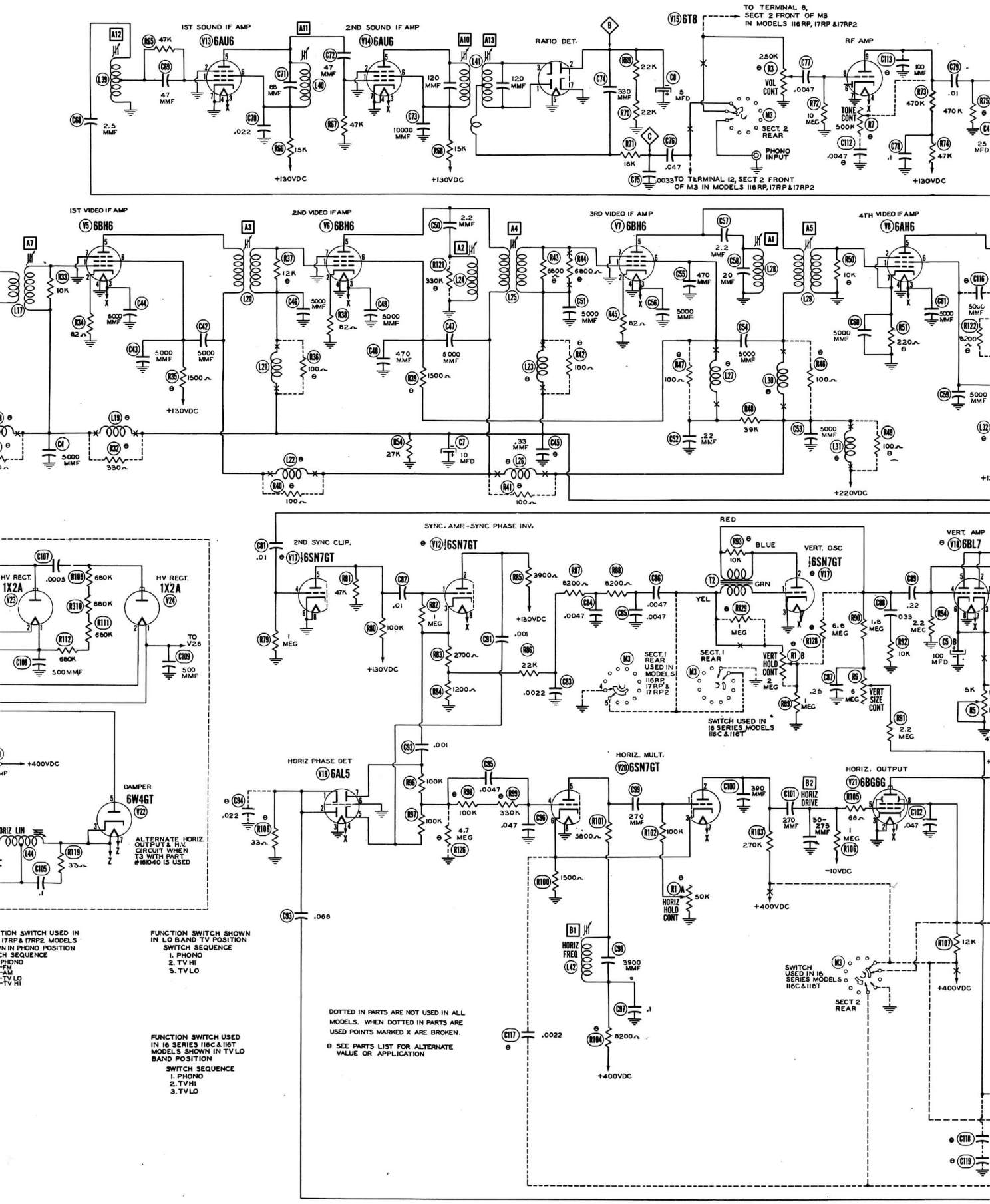
1ST SOUND IF AMP
V13 6AU6
2ND SOUND IF AMP
V14 6AU6
RATIO DET.
V15 6T8
TO TERMINAL 8, SECT 2 FRONT OF M3 IN MODELS 116RP, 17RP &17RP2
RF AMP
VOL CONT
TONE CONT
SECT 2 REAR
PHONO INPUT
TO TERMINAL 12, SECT 2 FRONT OF M3 IN MODELS 116RP, 17RP &17RP2
+130VDC
1ST VIDEO IF AMP
V5 6BH6
2ND VIDEO IF AMP
V6 6BH6
3RD VIDEO IF AMP
V7 6BH6
4TH VIDEO IF AMP
V8 6AH6
+220VDC
HV RECT.
1X2A
V23
V24
TO V2.6
+400VDC
DAMPER
6W4GT
V22
ALTERNATE HORIZ. OUTPUT & H.V. CIRCUIT WHEN T3 WITH PART #151040 15 USED
SYNC. AMP.-SYNC PHASE INV.
2ND SYNC CLIP.
V12 ½6SN7GT
V17 ½6SN7GT
RED
BLUE
GRN
YEL
VERT. OSC
½6SN7GT
V17
VERT. AMP
V18 6BL7
SECT. 1 REAR USED IN MODELS 116RP 17RP & 17RP2
VERT HOLD CONT
VERT SIZE CONT
SWITCH USED IN 16 SERIES MODELS 116C & 116T
HORIZ PHASE DET
V19 6AL5
HORIZ. MULT.
V20 6SN7GT
HORIZ. OUTPUT
V21 6BG6G
HORIZ DRIVE
HORIZ HOLD CONT
HORIZ FREQ
-10VDC
+400VDC
SWITCH USED IN 16 SERIES MODELS 116C & 116T
SECT 2 REAR
FUNCTION SWITCH USED IN 16 SERIES 116C & 116T MODELS SHOWN IN TV LO BAND POSITION
SWITCH SEQUENCE
1. PHONO
2. TV HI
3. TV LO
FUNCTION SWITCH SHOWN IN LO BAND TV POSITION
SWITCH SEQUENCE
1. PHONO
2. TV HI
3. TV LO
DOTTED IN PARTS ARE NOT USED IN ALL MODELS. WHEN DOTTED IN PARTS ARE USED POINTS MARKED X ARE BROKEN.
⊖ SEE PARTS LIST FOR ALTERNATE VALUE OR APPLICATION

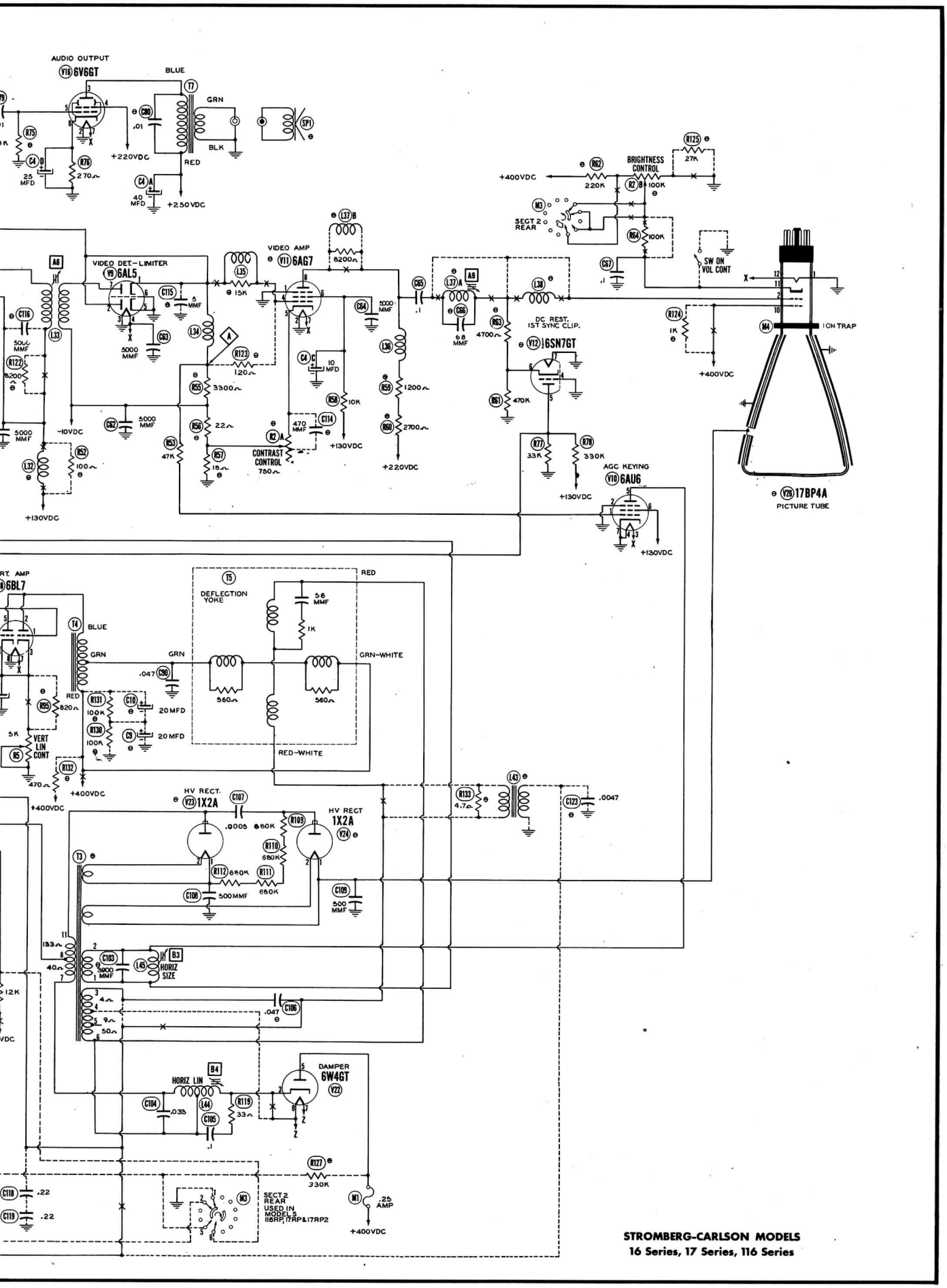

STROMBERG-CARLSON MODELS
16 Series, 17 Series, 116 Series

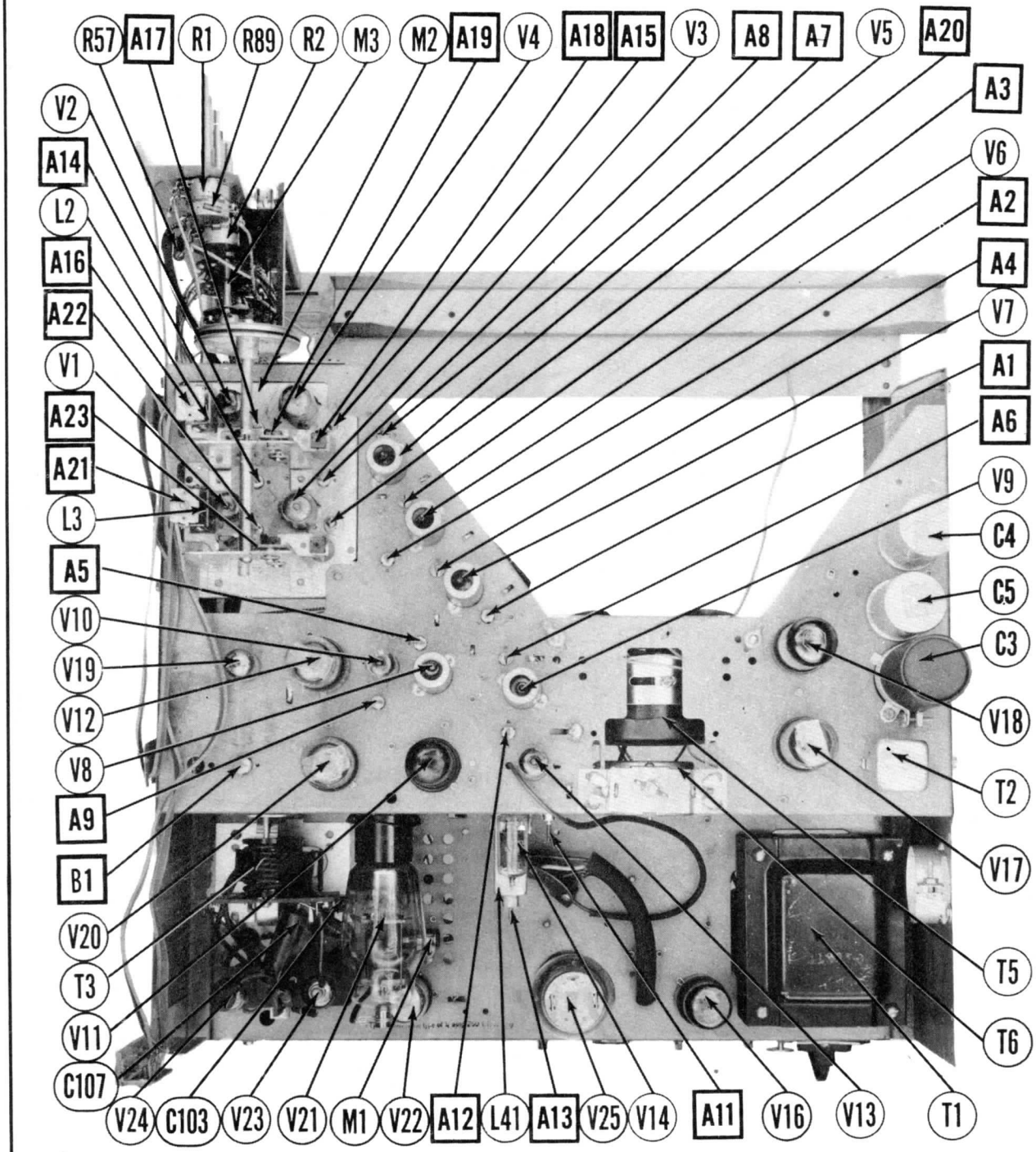

CHASSIS TOP VIEW

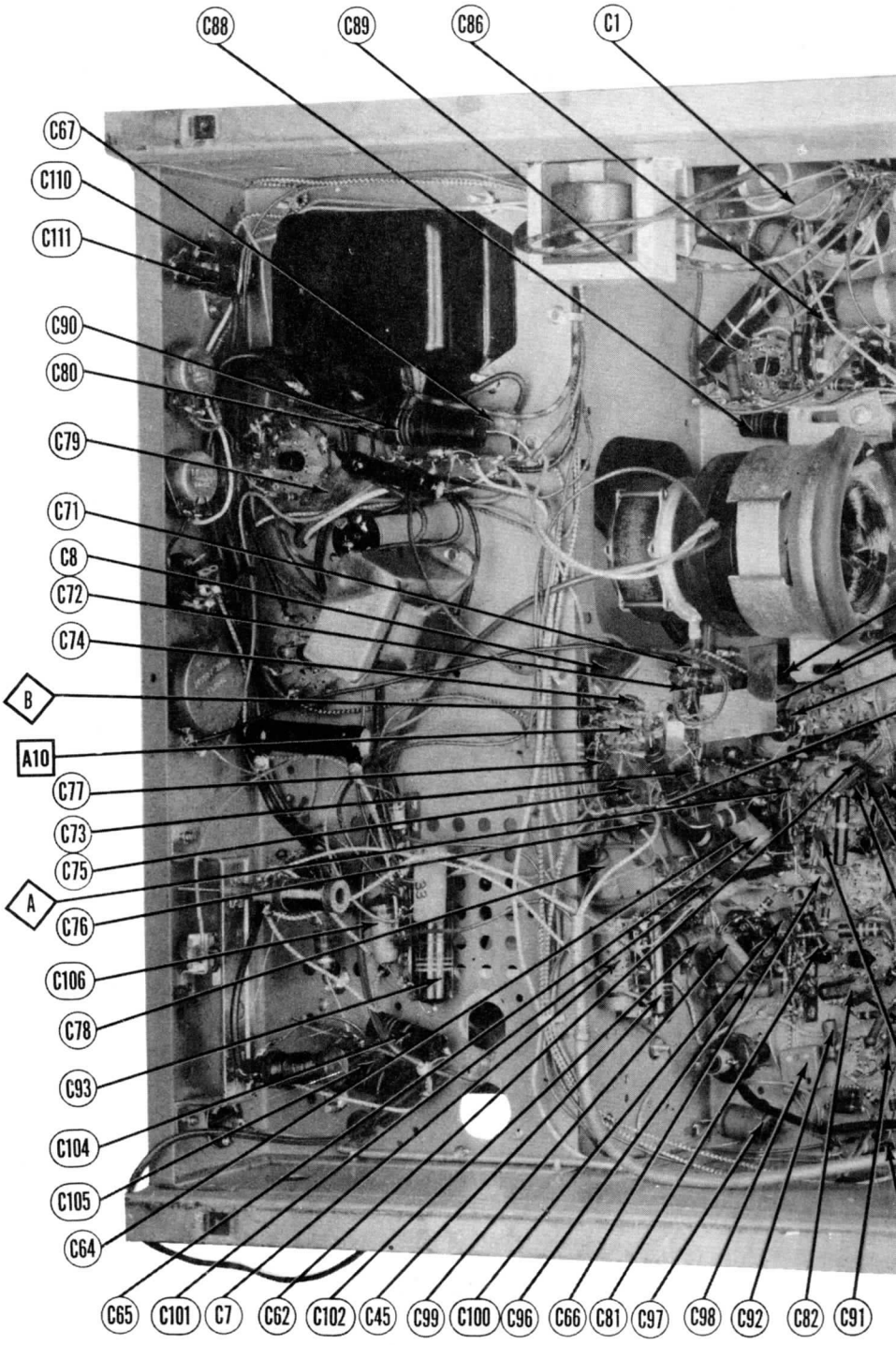

CHASSIS BOTTOM VIEW-CAPACITOR A

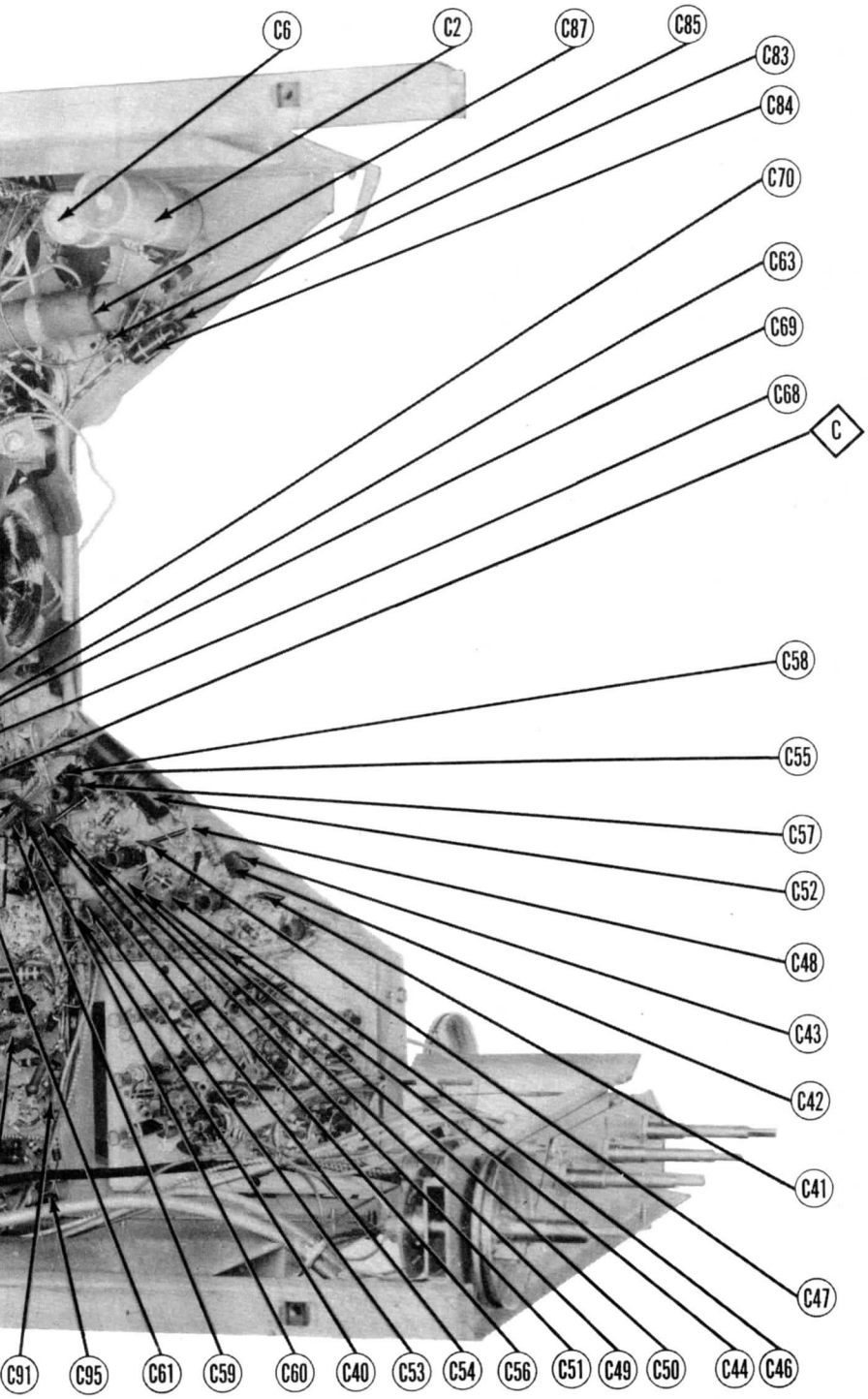

R AND ALIGNMENT IDENTIFICATION

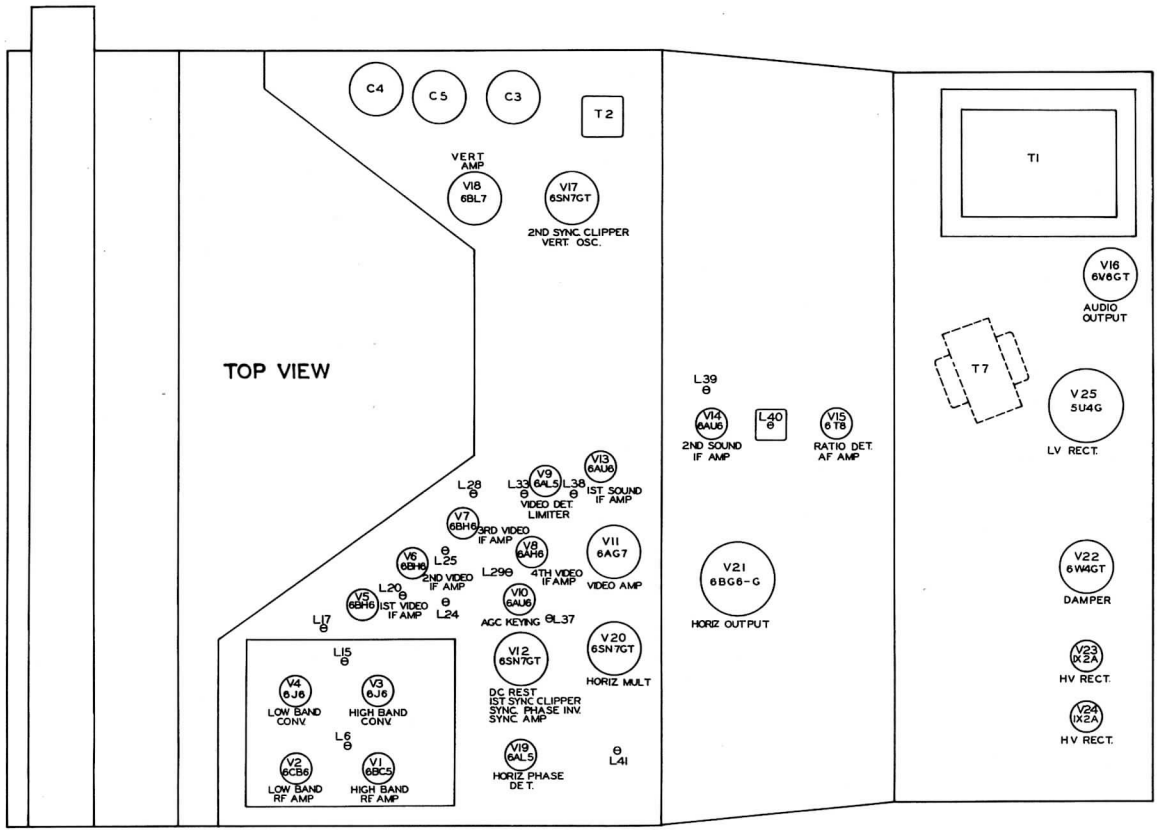

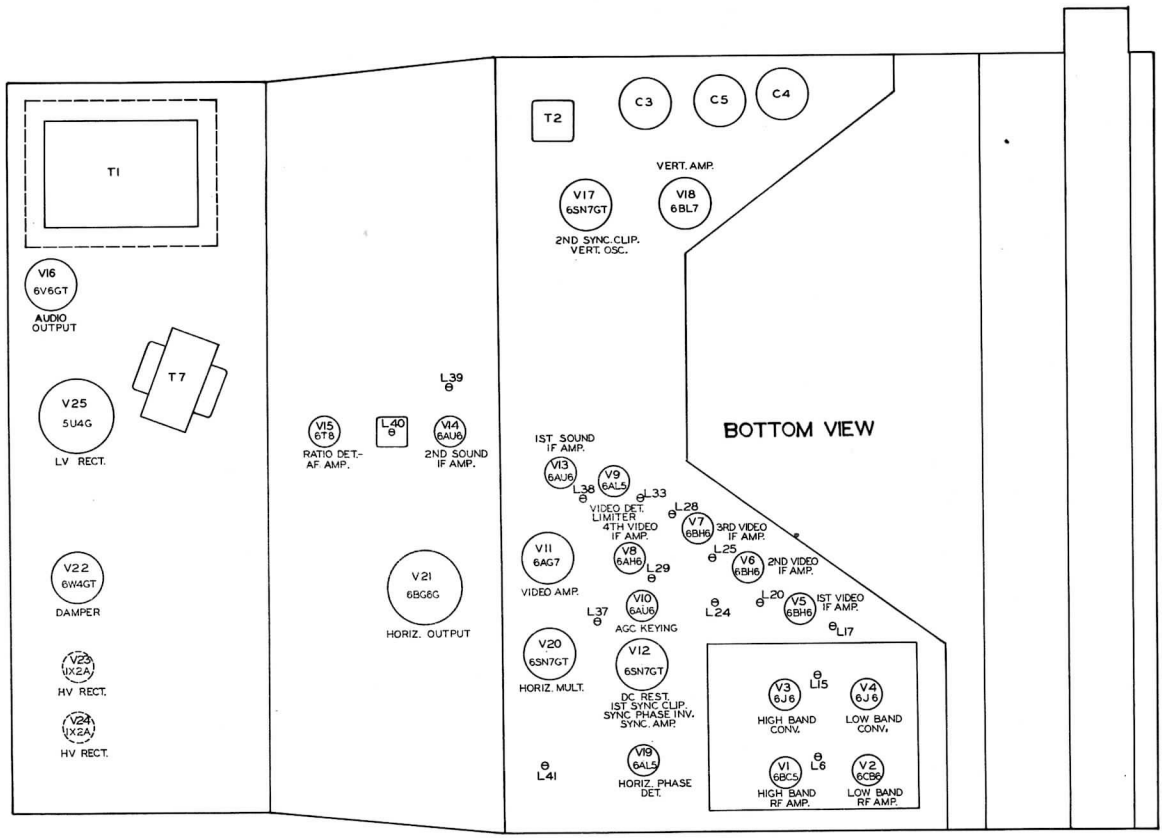

TUBE PLACEMENT CHART

TV ALIGNMENT INSTRUCTIONS

ALIGNMENT INSTRUCTIONS—READ CAREFULLY BEFORE ATTEMPTING ALIGNMENT

The end of the high voltage lead should be securely taped and kept away from the chassis. Do not remove the horizontal oscillator to disable the high voltage.

VIDEO IF ALIGNMENT

Turn the band switch to "low band", (clockwise).
Remove the low band converter tube, (V4), and replace it with a 6J6 which has Pin 1 removed, this will disable the local oscillator and prevent the possibility of erroneous indications. Connect the negative lead of a 3 volt battery to the ungrounded lead of C7, connect the positive lead to chassis.
Connect a 47KΩ resistor in series with the oscilloscope vertical input.
Connect the synchronized sweep voltage from the signal generator to the horizontal input of the oscilloscope for horizontal deflection.

	DUMMY ANTENNA	SWEEP GENERATOR COUPLING	SWEEP GENERATOR FREQUENCY	MARKER GENERATOR FREQUENCY	CHANNEL	CONNECT SCOPE	ADJUST	REMARKS
1.	Figure 1	High side to Pin 1 (grid) of 6BH6, (V5). Low side to chassis.	24.5MC (10MC SWP)	21.9MC	Any	Vert. amp. to Point A. Low side to chassis.	A1	Adjust for MINIMUM marker indication at the 21.9MC point on response curve.
2.	"	"	"	Not used	"	"	A2	Adjust to reduce the "pop up" below 21.9MC. The response should be essentially flat between 21MC and 21.9MC. See figure 3.
3.	"	"	"	22.7MC 26.4MC	"	"	A3, A4 A5, A6	Adjust for responsecurve similar to figure 2. A3 effects the high frequency end of A5 the low frequency end, A4 and A6 the center portion of the response curve.
4.	Direct	High side to an ungrounded tube shield floating over dummy converter tube, (V4). Low side to chassis.	"	22.7MC 22.9MC 26.4MC	"	"	A7, A8	Adjust for response curve similar to figure 4. If necessary retouch A3 thru A6 for proper response.

4.5MC TRAP ADJUSTMENT

	DUMMY ANTENNA	SWEEP GENERATOR COUPLING	SWEEP GENERATOR FREQUENCY	MARKER GENERATOR FREQUENCY	CHANNEL	CONNECT SCOPE	ADJUST	REMARKS
5.	.005MFD	High side to Point A. Low side to chassis.	Not used	4.5MC (400∿ Mod.)	Any	Vert. amp. to pin 2 of picture tube. Low side to chassis.	A9	Adjust for MINIMUM 400∿ indication on scope.

SOUND IF ALIGNMENT

Use frequency modulated signal with 60∿ modulation and 450KC sweep. Use 120∿ sawtooth voltage in scope for horizontal deflection.

	DUMMY ANTENNA	SWEEP GENERATOR COUPLING	SWEEP GENERATOR FREQUENCY	MARKER GENERATOR FREQUENCY	CHANNEL	CONNECT SCOPE	ADJUST	REMARKS
6.	.005MFD	High side to Point A. Low side to chassis.	4.5MC (450KC SWP)	4.5MC	Any	Vert. amp. to Point B. Low side to chassis.	A10, A11, A12	Disconnect stabilizer capacitor C8. Adjust for maximum amplitude and symmetry as per figure 5.
7.	"	"	"	"	"	Vert. amp. to Point C. Low side to chassis.	A13	Reconnect capacitor C8. Adjust A14 so 4.5MC occurs at center of crossover lines as per figure 6. SLIGHTLY retouch A10 for maximum amplitude and straightness of crossover lines.

TUNER ALIGNMENT

Remove the dummy converter tube and replace the original 6J6 in its socket.
The use of two marker generators are required to align the tuner of this receiver. Marker generator No. 1 is connected in parallel with the sweep generator thru a 2 or 3MMF capacitor, (if the sweep generator has a built in marker it will be used for marker #1). The frequency to which Marker #1 is tuned will be indicated in the table by an asterisk (*). Marker generator #2 is connected to an ungrounded tube shield floating over the converter tube of the band being aligned, (V3 for high band, V4 for low band). The frequency to which marker #2 is tuned will be indicated by a dagger (†).
Turn the tuning control until the tuning cores are at the extreme bottom of their travel.
Pre-set the three low band tuning cores so that the bottom edge of the core is even with the bottom edge of the last turn of the coil.
Pre-set the high band RF and oscillator cores so that the bottom end of the slug is 3/16 inch from the bottom edge of the last coil turn. The converter (center coil slug), should be set so the bottom end of the core is even with the bottom edge of the last coil turn.
Position the link between the high band RF and converter coils so the link is even with the bottom edge of the colored vinyl coil covering.
Make two marks on the chassis corresponding to the index marks on the cabinet front.
Replace the tuning knobs and position the calibrated dial so that the index on one side is centered between the 2 and 13 on the scale, and between the 6 and 7 on the opposite side.
Connect the synchronized sweep voltage from the signal generator to the horizontal input of the oscilloscope for horizontal deflection.
The image rejection trap A14 has been properly set at the factory and should not require adjustment in the field.

LOW BAND ALIGNMENT

Turn the function selector switch to "low band TV" (fourth position CW).

	DUMMY ANTENNA	SWEEP GENERATOR COUPLING	SWEEP GENERATOR FREQUENCY	MARKER GENERATOR FREQUENCY	CHANNEL	CONNECT SCOPE	ADJUST	REMARKS
8.	Two 120Ω carbon resistors	Across antenna terminals with 120Ω in each lead.	85MC (10MC SWP)	*87.75MC †21.9MC	6	Vert. amp. to Point D. Low side to chassis.	A15	Adjust so markers coincide on response curve.
9.	"	"	"	83.25MC 87.75MC	"	"	A16, A17	Adjust for maximum symmetrical response similar to figure 7.
10.	"	"	57MC (10MC SWP)	*59.75MC †21.9MC	2	"	A18	Adjust tuning control in vicinity of channel 2 until markers coincide. If necessary adjust A18 to obtain proper calibration.
11.	"	"	69MC (10MC SWP)	*71.75MC †21.9MC	4	"		Adjust tuning control until markers coincide.
12.	"	"	"	67.25MC 71.75MC	4	"	A19, A17	Adjust for maximum symmetrical response similar to figure 7.
13.	"	"	85MC (10MC SWP)	*87.25MC †21.9MC	6	"	A15	Adjust tuning control until markers coincide. If necessary retouch A15 to correct calibration.
14.	"	"	"	83.25MC 87.75MC	6	"	A16, A17	Check the channel 6 response and if necessary retouch A16 and A17 for response similar to figure 7.
15.	"	"	79MC (10MC SWP)	*77.25MC *81.75MC †21.9MC	5	"		Tune to each channel by coincidence of RF sound carrier marker and 21.9MC marker. If the response on any channel falls outside the limits of figure 8 make compromise adjustments of A17 and A19 for best overall response.
			69MC (10MC SWP)	*67.25MC *71.75MC †21.9MC	4			
			63MC (10MC SWP)	*61.25MC *65.75MC †21.9MC	3			
			57MC (10MC SWP)	*55.25MC *59.75MC †21.9MC	2			

TV ALIGNMENT INSTRUCTIONS (CONT.)

HIGH BAND ALIGNMENT

Turn the function selector switch to "high band TV" (maximum CW).

	DUMMY ANTENNA	SWEEP GENERATOR COUPLING	SWEEP GENERATOR FREQUENCY	MARKER GENERATOR FREQUENCY	CHANNEL	CONNECT SCOPE	ADJUST	REMARKS
16.	Two 120Ω carbon resistors	Across antenna terminals with 120Ω in each lead.	213MC (10MC SWP)	*215.75MC †21.9MC	13	Vert. amp. to Point D. Low side to chassis.	A20	Adjust for coincidence of the markers
17.	"	"	"	211.25MC 215.75MC	13	"	A21, A22	Adjust for symmetrical response curve similar to figure 9.
18.	"	"	177MC (10MC SWP)	*179.75MC †21.9MC	7	"		Turn tuning control until markers coincide. If necessary alter the position of the connecting strap at the base of the high band oscillator coil to correct dial calibration.
19.	"	"	"	175.25MC 179.75MC	"	"		Check for response curve similar to figure 9. If necessary adjust the coupling link for proper band width.
20.	"	"	213MC (10MC SWP)	*215.75MC †21.9MC	13	"		Tune for marker coincidence. If necessary retouch A20 to correct dial calibration.
21.	"	"	"	211.25MC 215.75MC	13	"	A21, A22, A23	Check the channel 13 response. If necessary retouch A21 and A22 and adjust A23 for proper response. A23 affects primarily the bandwidth.
22.	"	"	207MC (10MC SWP)	*205.25MC *209.75MC †21.9MC	12	"		Tune to each channel by coincidence of RF sound carrier marker and 21.9MC marker. If the response on any channel falls outside the limits shown in figure 10, make compromise adjustment of A22 and coupling link for best overall response.
			201MC (10MC SWP)	*199.25MC *203.75MC †21.9MC	11			
			195MC (10MC SWP)	*193.25MC *197.75MC †21.9MC	10			
			189MC (10MC SWP)	*187.25MC *191.75MC †21.9MC	9			
			183MC (10MC SWP)	*181.25MC *185.75MC †21.9MC	8			
			177MC (10MC SWP)	*175.25MC *179.75MC †21.9MC	7			

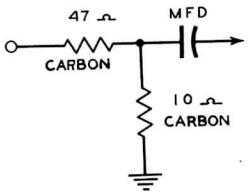

FIG. 1

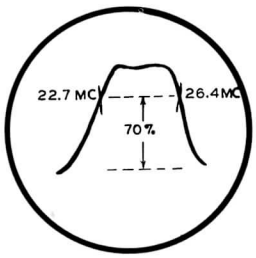

FIG. 2

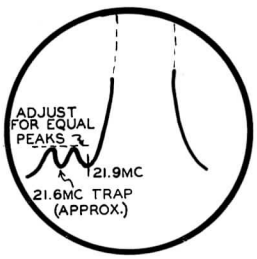

FIG. 3

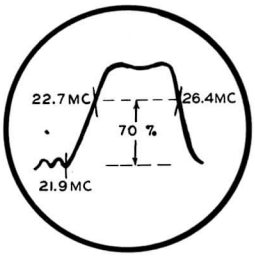

FIG. 4

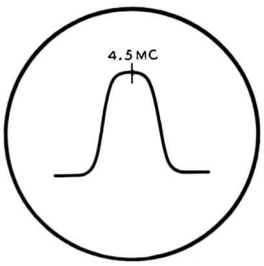

FIG. 5

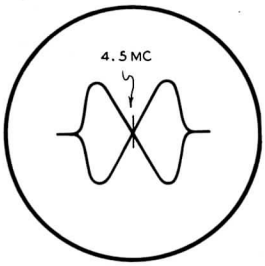

FIG. 6

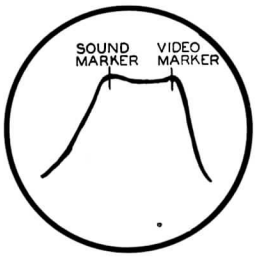

FIG. 7

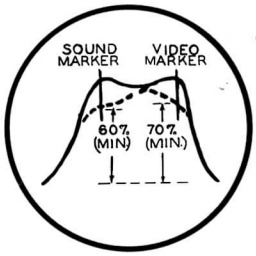

FIG. 8

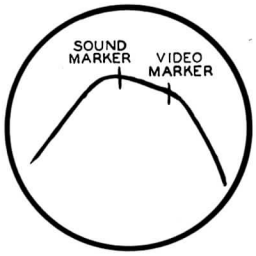

FIG. 9

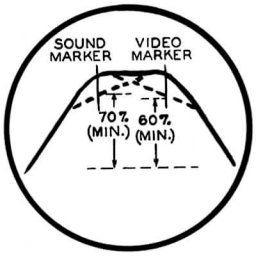

FIG. 10

VOLTAGE AND RESISTANCE MEASUREMENTS

VOLTAGE READINGS

Item	Tube	Pin 1	Pin 2	Pin 3	Pin 4	Pin 5	Pin 6	Pin 7	Pin 8	Pin 9
V 1	6BC5	■-.8VDC	0V	6.3VAC	0V	■205VDC	■100VDC	0V		
V 2	6CB6	▲-.6VDC	0V	6.3VAC	0V	▲220VDC	▲155VDC	0V		
V 3	6J6	■60VDC	130VDC	6.3VAC	0V	■-1.4VDC	■§-7.5VDC	0V		
V 4	6J6	▲90VDC	130VDC	6.3VAC	0V	▲-2VDC	▲§-8.9VDC	0V		
V 5	6BH6	-.6VDC	.4VDC	6.3VAC	0V	220VDC	130VDC	0V		
V 6	6BH6	-.6VDC	.4VDC	6.3VAC	0V	215VDC	105VDC	0V		
V 7	6BH6	-.6VDC	.4VDC	6.3VAC	0V	215VDC	105VDC	0V		
V 8	6AH6	0V	1.4VDC	6.3VAC	0V	130VDC	130VDC	1.4VDC		
V 9	6AL5	-8VDC	-8VDC	0V	6.3VAC	0V	0V	-9.8VDC		
V 10	6AU6	-7.8VDC	0V	6.3VAC	0V	-.5VDC	130VDC	0V		
V 11	6AG7	0V	0V	0V	-9.2VDC	-2.4VDC	125VDC	6.3VAC	210VDC	
V 12	6SN7GT	1VDC	110VDC	19VDC	0V	12VDC	2VDC	0V	6.3VAC	
V 13	6AU6	2.2VDC	0V	6.3VAC	0V	60VDC	60VDC	0V		
V 14	6AU6	-.6VDC	0V	6.3VAC	0V	75VDC	70VDC	0V		
V 15	6T8	-.6VDC	-12VDC	-9VDC	6.3VAC	0V	-.8VDC	0V	-.6VDC	50VDC
V 16	6V6GT/G	0V	0V	230VDC	220VDC	0V	525VDC	6.3VAC	11.8VDC	
V 17	6SN7GT	-1.4VDC	25VDC 60VDC	0V	-.6VDC	20VDC	0V	6.3VAC	0V	
V 18	6BL7	.1VDC	380VDC	33VDC	.1VDC	380VDC	33VDC	6.3VAC	0V	
V 19	6AL5	0V	0V	0V	6.3VAC	16VDC	0V	-5.4VDC		
V 20	6SN7GT	-7.4VDC	120VDC	16VDC	1.6VDC	260VDC	16VDC	6.3VAC	0V	
V 21	6BG6G	0V	0V	0V	-27VDC	-27VDC	0V	6.3VAC	320VDC	TOP CAP *
V 22	6W4GT	0V	0V	470VDC	0V	400VDC	0V	470VDC	470VDC	
V 23	1X2A	* DO NOT MEASURE								
V 24	1X2A	* DO NOT MEASURE								
V 25	5U4G	0V	420VDC	58VAC	440VAC	0V	440VAC	0V	420VDC	
V 26	17BP4A	0V	2VDC	PIN 10 400VDC	PIN 11 125VDC	PIN 12 6.3VAC				

ALL MEASUREMENTS TAKEN WITH PICTURE TUBE REMOVED
TV-PHONO SWITCH IN TV POSITION
▲ MEASURED WITH RANGE SWITCH IN LOW-BAND POSITION
■ MEASURED WITH RANGE SWITCH IN HIGH-BAND POSITION
† MEASURED FROM PIN 8 OF V25
# MEASURED FROM PIN 3 OF V22
§ TAKEN WITH VTVM

RESISTANCE READINGS

Item	Tube	Pin 1	Pin 2	Pin 3	Pin 4	Pin 5	Pin 6	Pin 7	Pin 8	Pin 9
V 1	6BC5	30KΩ	0Ω	.1Ω	0Ω	■†3.3KΩ	■†35KΩ	0Ω		
V 2	6CB6	29KΩ	0Ω	.1Ω	0Ω	▲†2.4KΩ	▲†35KΩ	0Ω		
V 3	6J6	■†9KΩ	†4.3KΩ	.1Ω	0Ω	100KΩ	2.7KΩ	0Ω		
V 4	6J6	▲†8KΩ	†4.3KΩ	.1Ω	0Ω	110KΩ	10KΩ	0Ω		
V 5	6BH6	27KΩ	82Ω	.1Ω	0Ω	†2.2KΩ	†5.7KΩ	0Ω		
V 6	6BH6	27KΩ	82Ω	.1Ω	0Ω	†2.2KΩ	†42KΩ	0Ω		
V 7	6BH6	27KΩ	82Ω	.1Ω	0Ω	†2.2KΩ	†42KΩ	0Ω		
V 8	6AH6	.4Ω	220Ω	.1Ω	0Ω	†4.2KΩ	†4.2KΩ	220Ω		
V 9	6AL5	3.4KΩ	3.4KΩ	0Ω	.1Ω	0Ω	0Ω	31Ω		
V 10	6AU6	50KΩ	0Ω	.1Ω	0Ω	27KΩ	†4.2KΩ	0Ω		
V 11	6AG7	0Ω	0Ω	Inf.	3.4KΩ	770Ω	†14KΩ	.1Ω	†6.2KΩ	
V 12	6SN7GT	1Meg	†8.2KΩ	3.9KΩ	0Ω	33KΩ	470KΩ	0Ω	.1Ω	
V 13	6AU6	47KΩ	0Ω	.1Ω	0Ω	†19KΩ	†19KΩ	0Ω		
V 14	6AU6	47KΩ	0Ω	.1Ω	0Ω	†19KΩ	†19KΩ	0Ω		
V 15	6T8	Inf.	44KΩ	Inf.	.1Ω	0Ω	Inf.	0Ω	10Meg	†520KΩ
V 16	6V6GT/G	0Ω	0Ω	†1.7KΩ	†2.2KΩ	470KΩ	Inf.	.1Ω	270Ω	
V 17	6SN7GT	1Meg	#4Meg #10Meg	0Ω	1Meg	47KΩ	0Ω	.1Ω	0Ω	
V 18	6BL7	2.2Meg	†1.2KΩ	0Ω 5KΩ	2.2Meg	†1.2KΩ	0Ω 5KΩ	.1Ω	0Ω	
V 19	6AL5	33Ω	33Ω	0Ω	.1Ω	Inf.	0Ω	Inf.		
V 20	6SN7GT	150KΩ	†270KΩ	1.5KΩ	Inf.	†14KΩ	1.5KΩ	.1Ω	0Ω	
V 21	6BG6G	0Ω	0Ω	0Ω	Inf.	1Meg	Inf.	.1Ω	†12KΩ	TOP CAP #46Ω
V 22	6W4GT	Inf.	Inf.	Inf.	Inf.	†90Ω	Inf.	#.2Ω	#0Ω	
V 23	1X2A	Inf.	Inf.	Inf.	Inf.	Inf.	Inf.	Inf.	Inf.	Inf.
V 24	1X2A	Inf.	Inf.	Inf.	Inf.	Inf.	Inf.	Inf.	Inf.	Inf.
V 25	5U4G	Inf.	32KΩ	Inf.	80Ω	Inf.	80Ω	Inf.	32KΩ	
V 26	17BP4A	0Ω	475KΩ	PIN 10 †90Ω	PIN 11 200KΩ	PIN 12 .1Ω				

TOPCAP #180Ω
TOPCAP #0Ω

ALL MEASUREMENTS ARE TAKEN WITH PICTURE TUBE REMOVED
TV-PHONO SWITCH IN TV POSITION
▲ MEASURED WITH RANGE SWITCH IN LOW-BAND POSITION
■ MEASURED WITH RANGE SWITCH IN HIGH-BAND POSITION
† MEASURED FROM PIN 8 OF V25
# MEASURED FROM PIN 3 OF V22

1. DC Voltage measurements are at 20,000 ohms per volt; AC Voltage measured at 1,000 ohms.
2. Pin numbers are counted in a clockwise direction on bottom of socket.
3. Measured values are from socket pin to common negative unless otherwise stated.
4. Line voltage maintained at 117 volts for voltage readings.
5. Front panels controls set at minimum.
6. Where readings may vary according to the setting of the service controls, both minimum and maximum readings are given.

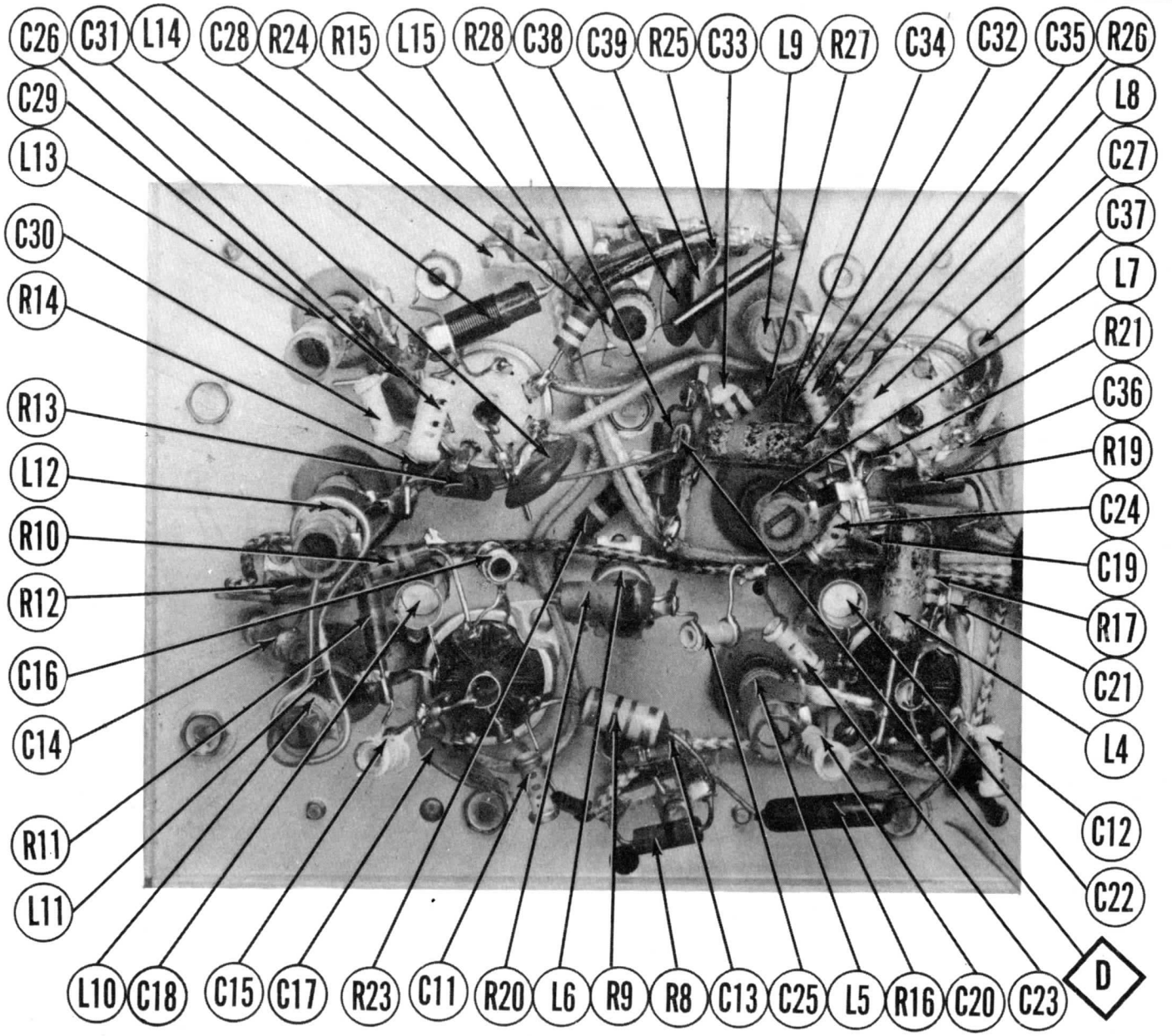

RF TUNER-BOTTOM VIEW

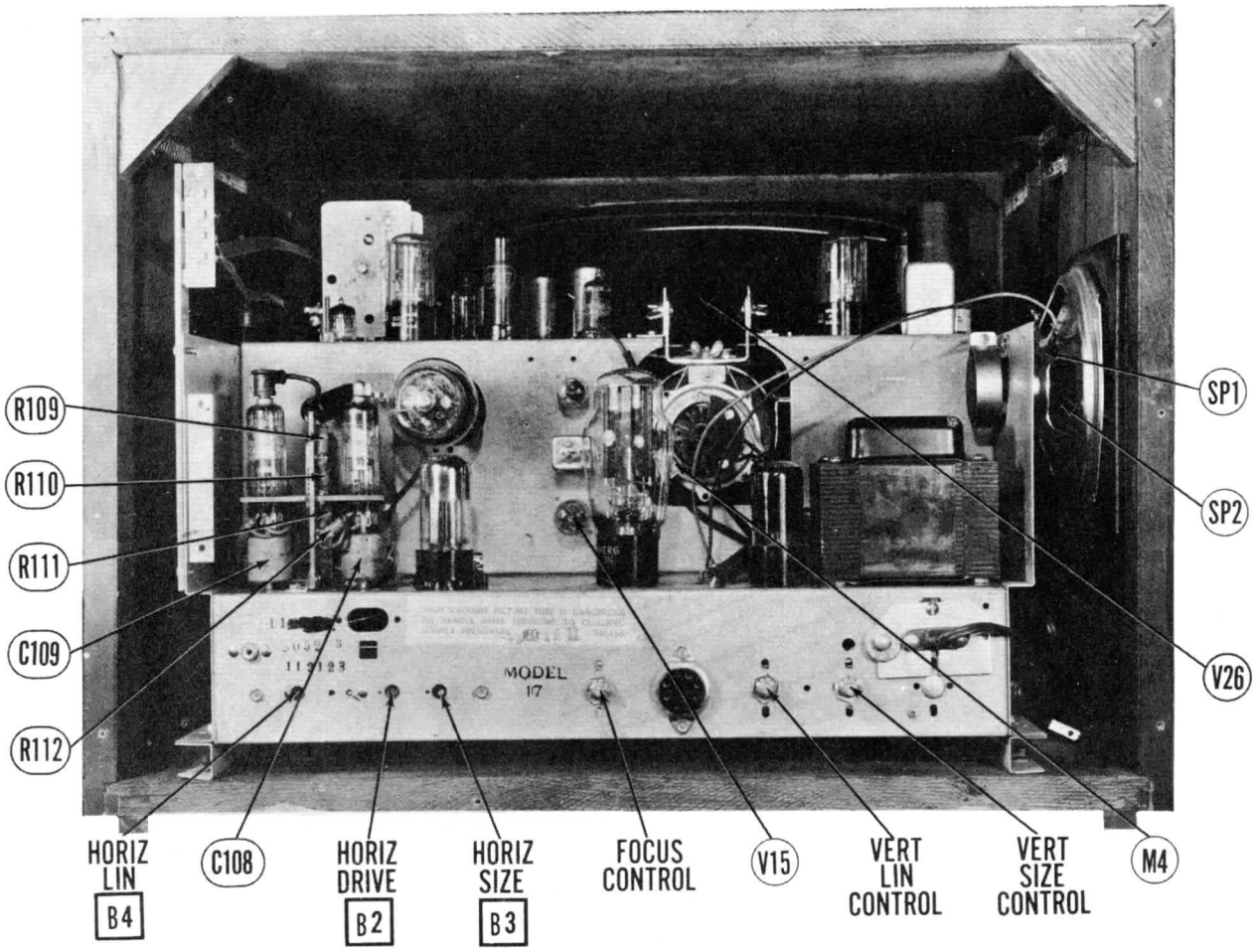

CABINET-REAR VIEW

HORIZONTAL SWEEP CIRCUIT ADJUSTMENTS

Turn the set on and tune in a TV station preferably a test pattern.

Turn the horizontal hold control to the mid-position of its range.

Adjust the horizontal frequency slug, (B1), until the picture synchronizes horizontally.

Adjust the horizontal drive trimmer, (B2), counter-clockwise as far as possible without crowding or vertical lines appearing in the picture.

Adjust the horizontal size slug, (B3), until the picture fills the mask horizontally.

Adjust the horizontal linearity slug, (B4), until the picture is symmetrical from left to right. Slight readjustment of B2 may be required for optimum linearity.

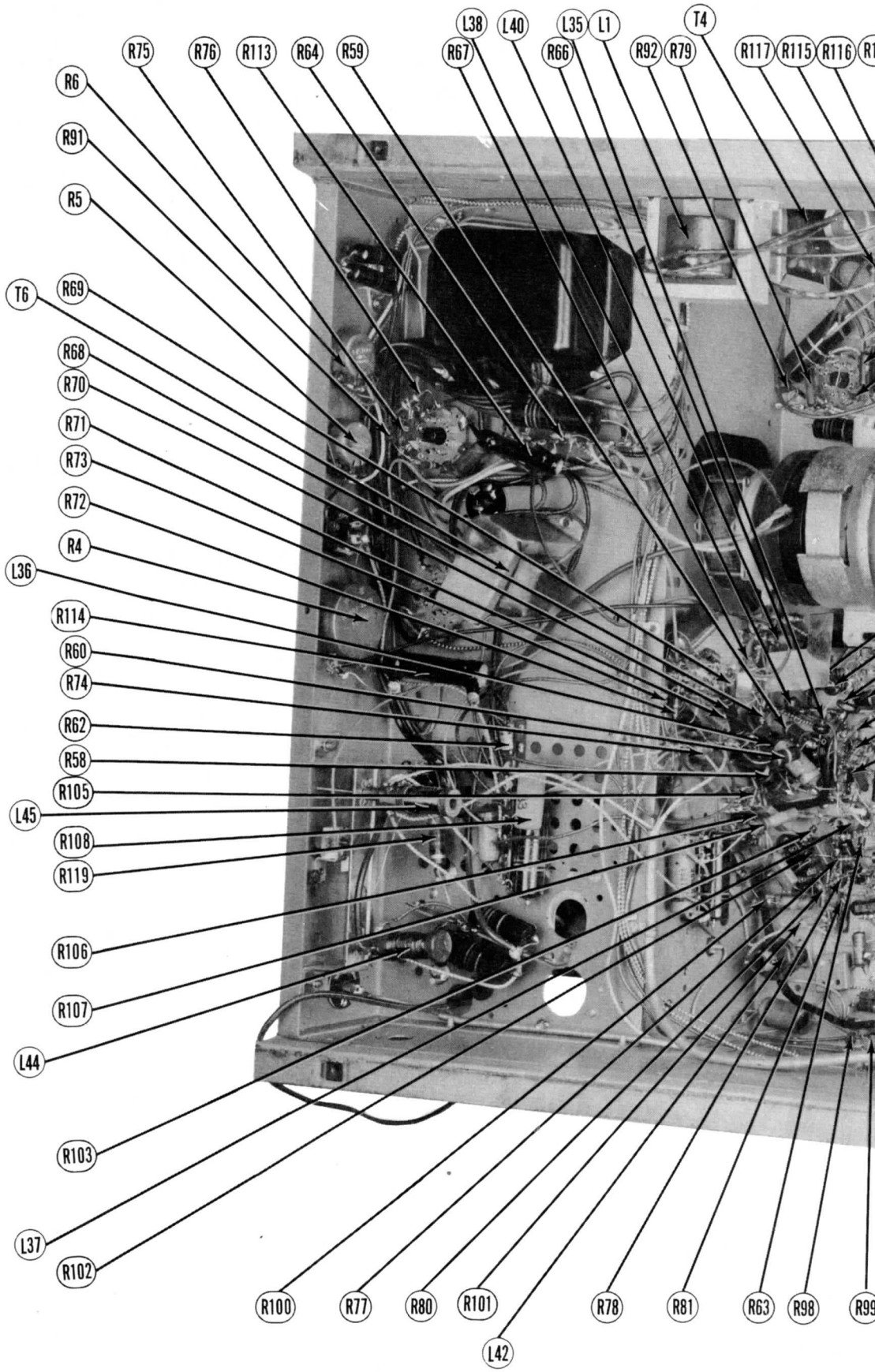

CHASSIS BOTTOM VIEW-RESISTOR A

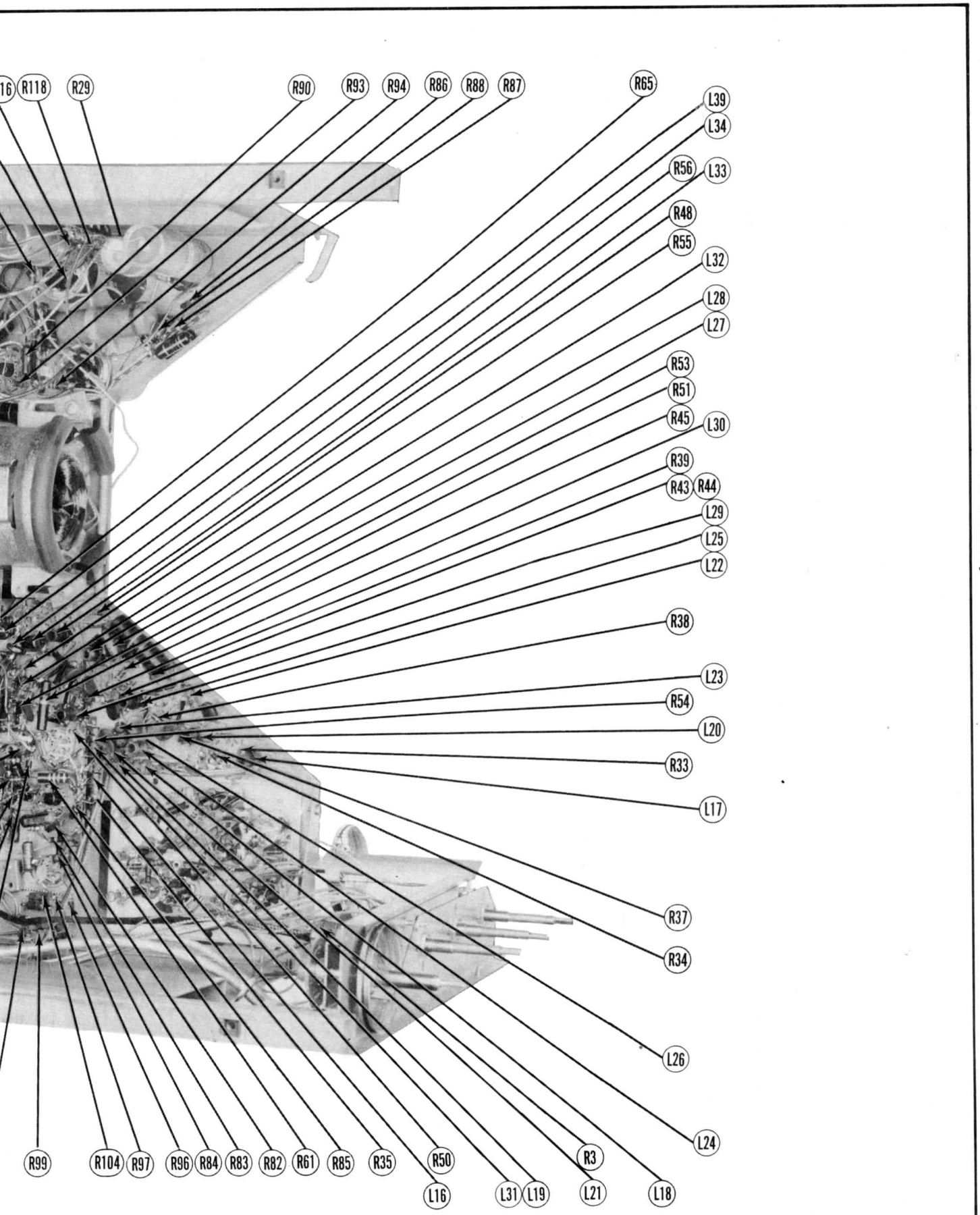

R AND INDUCTOR IDENTIFICATION

PARTS LIST AND DESCRIPTIONS

TUBES (SYLVANIA or Equivalent)

ITEM No.	USE	REPLACEMENT DATA: STROM-CARL PART No.	REPLACEMENT DATA: STANDARD REPLACEMENT	RMA BASE TYPE	NOTES
V1	High band RF Amp.	6BC5	6BC5	7BD	
V2	Low band RF Amp.	6CB6	6CB6	6CK	
V3	High band Conv.	6J6	6J6	7BF	
V4	Low band Conv.	6J6	6J6	7BF	
V5	1st. Video IF Amp.	6BH6	6BH6	7CM	
V6	2nd. Video IF Amp.	6BH6	6BH6	7CM	
V7	3rd. Video IF Amp.	6BH6	6BH6	7CM	
V8	4th. Video IF Amp.	6AH6	6AH6	7CM	
V9	Video Detector-Limiter	6AL5	6AL5	6BT	
V10	AGC Keying	6AU6	6AU6	7BK	
V11A	Video Amplifier	6AG7	6AG7	8Y	
B	Video Amplifier	6AC7	6AC7	8N	
V12A	DC Restorer-1st. Sync. Clipper - Sync. Phase-Inv.-Sync. Clipper	6SN7GT	6SN7GT	8BD	
B	DC Restorer-1st. Sync. Clipper - Sync. Phase Inv.-Sync. Amplifier	12AU7	12AU7	9A	
V13	1st. Sound IF Amp.	6AU6	6AU6	7BK	
V14	2nd. Sound IF Amp.	6AU6	6AU6	7BK	
V15	Ratio Detector-AF Amplifier	6T8	6T8	9E	
V16	Audio Output	6V6GT	6V6GT	7AC	
V17A	2nd. Sync. Clipper Vert. Osillator	6SN7GT	6SN7GT	8BD	
B	2nd. Sync. Clipper Vert. Oscillator	12AU7	12AU7	9A	
V18A	Vert. Amplifier	6BL7	6BL7	8BD	
B	Vert. Amplifier	12AU7	12AU7	9A	
V19	Horiz. Phase Det.	6AL5	6AL5	6BT	
V20	Horiz. Multivib.	6SN7GT	6SN7GT	8BD	
V21	Horiz. Output	6BG6G	6BG6G	5BT	
V22	Damper	6W4GT	6W4GT	4CG	
V23A	HV Rectifier	1X2A	1X2A	7CB	
B	HV Rectifier	1X2	1X2	7CB	
V24A	HV Rectifier	1X2A	1X2A	7CB	
B	HV Rectifier	1X2	1X2	7CB	
V25	LV Rectifier	5U4G	5U4G	5T	
V26A	Picture Tube	17BP4A	17BP4A	12D	
B	Picture Tube	17BP4	17BP4	12D	
C	Picture Tube	17AP4	17AP4	12D	
D	Picture Tube	16GP4	16GP4	12D	
E	Picture Tube	16RP4	16RP4	12D	
F	Picture Tube	16KP4	16KP4	12D	
G	Picture Tube	16TP4	16TP4	12D	

CAPACITORS

Capacity values given in the rating column are in mfd. for Electrolytic and Paper Capacitors, and in mmfd. for Mica and Ceramic Capacitors.

ITEM No.	RATING: CAP.	RATING: VOLT	REPLACEMENT DATA: STROM-CARL PART No.	REPLACEMENT DATA: AEROVOX PART No.	REPLACEMENT DATA: CENTRALAB PART No.	REPLACEMENT DATA: CORNELL-DUBILIER PART No.	REPLACEMENT DATA: ERIE PART No.	REPLACEMENT DATA: SPRAGUE PART No.	IDENTIFICATION CODES AND INSTALLATION NOTES
C1	80	300	111067	PRS450/40-40		UP8030		TVA-1716	Filter
C2	80	300	111067	PRS450/40-40		UP8030		TVA-1716	Filter
C3A	80	300	111064	AFH1616G		UP8830		TVL-2585	▬ Filter
B	80	300							■ Filter
C4A	40	450	111065	AFH832J5A		UPT42245C		TVL-4729	▬ Filter
B	10	450							■ Decoupling
C	10	450							▲ V. Amp. Screen
D	25	25							Output Cathode
C5A	40	450	111083	AFH8J		UPT4145 -		TVL-1725	▬ Filter
B	100	50		PRS50/100		V10		TVA-1310	▲ Vert. Output Cathode
C6	500	12	111082	PRS12/500		BRH125A		TVA-1132	Filter
C7	10	25	111084	PRS25/10		BR102A		TVA-1204	AGC Filter
C8	5	50	111030	PRS150/4		BR550		TVA-1303	STabilizing Cap.
C9	20	300	111085						Vert. Output Dec. §
C10	20	300	111085						Vert. Output Dec. §
C11	220		110462	SI220	D6-221		GP2K-221	19C13	RF Coupling
C12	220		110462	SI220	D6-221		GP2K-221	19C13	RF Coupling
C13	750		110654	SI750	D6-751		GP2L-751	19C1	AGC Filter
C14	75		110483	SI75	D6-750		GP2K-750	19C11	HB RF Amp. Dec.
C15	2000		110652	SI2000	D6-202		GP2-333-202	29C2	HB RF Amp. Plate Dec.
C16	75		110483	SI175	D6-750		GP1K-750	19C11	HB RF Amp. Screen
C17	5000		110586	BPD-005	DD-502		811-005	29C1	HB RF Amp. Fil.
C18	.5-5		110035				532-08-0R5		Variable Trimmer
C19	750		110654	SI750	D6-751		GP2L-751	19C1	LB RF Amp. Dec.
C20	2000		110652	SI2000	D6-202		GP2-333-202	29C2	LB RF Amp. Plate Dec.
C21	750		110654	SI750	D6-751		GP2L-751	19C1	LB RF Amp. Screen
C22	.5-5		110035				532-08-0R5		Variable Trimmer
C23	4.5		110667					*	RF Coupling
C24	4.5		110667						RF Coupling
C25	5.5		110655						Fixed Trimmer
C26	2000		110652	SI2000	D6-202		GP2-333-202	29C2	HB Conv. Grid Filter
C27	2000		110652	SI2000	D6-202		GP2-333-202	29C2	HB Conv. Grid Filter
C28	750		110654	SI750	D6-751		GP2L-751	19C1	HB Osc. Dec.
C29	10		110656	SI10N750	TCN-10		N750K-100	19C4	Fixed Trimmer
C30	22		110653	SI22	D6-220		GP1K-22	19C23	HB Osc. Grid Cap.
C31	5000		110586	BPD-005	DD-502		811-005	29C1	HB Conv. Fil.
C32	1.5		110438	SI1.5NP0	TCZ-1.5		NP0K-1R5		Osc. Coupling
C33	750		110654	SI750	D6-751		GP2L-751	19C1	LB Osc. Dec.
C34	10		110656	SI10N750	TCN-10		N750K-100	19C4	Osc. Feedback
C35	22		110653	SI22	D6-220		GP1K-220	19C23	LB Osc. Grid Cap.
C36	5000		110586	BPD-005	DD-502		811-005	29C1	LB Converter Fil.
C37	10		110656	SI10N750	TCN-10		N750K-100	19C4	Fixed Trimmer
C38	5000		110586	BPD-005	DD-502		811-005	29C1	RF Bypass
C39	5000		110586	BPD-005	DD-502		811-005	29C1	Conv. Plate Dec.
C40	5000		110586	BPD-005	DD-502		811-005	29C1	RF Bypass
C41	5000		110586	BPD-005	DD-502	1D5D5	811-005	29C1	AGC Filter
C42	5000		110586	BPD-005	DD-502	1D5D5	811-005	29C1	1st. V. IF Plate Dec.
C43	5000		110586	BPD-005	DD-502	1D5D5	811-005	29C1	1st. V. IF Screen
C44	5000		110586	BPD-005	DD-502	1D5D5	811-005	29C1	1st. V. IF Fil.
C45	.33	200		P288-33		GT2P5		2TM-P47	AGC Filter *

PARTS LIST AND DESCRI

CAPACITORS (CONT.)

ITEM No.	RATING CAP.	RATING VOLT	REPLACEMENT DATA STROM-CARL PART No.	AEROVOX PART No.	CENTRALAB PART No.	CORNELL-DUBILIER PART No.	ERIE PART No.	SPRAGUE PART No.	IDENTIFICATION CODES AND INSTALLATION NOTES
C46	5000		110586	BPD-005	DD-502	1D5D5	811-005	29C1	AGC Filter
C47	5000		110586	BPD-005	DD-502	1D5D5	811-005	29C1	2nd. V. IF Plate Dec.
C48	470			SI470	D6-471	5W5T5	GP2K-471	19C15	2nd. V. IF Screen
C49	5000		110586	BPD-005	DD-502	1D5D5	811-005	29C1	2nd. V. IF Fil.
C50	2.2		110439		TCZ-2.2				IF Coupling
C51	5000		110586	BPD-005	DD-502	1D5D5	811-005	29C1	AGC Filter
C52	.22	400	110548	P488-22		GT4P25		4TM-P22	RF Bypass
C53	5000		110586	BPD-005	DD-502	1D5D5	811-005	29C1	RF Bypass
C54	5000		110586	BPD-005	DD-502	1D5D5	811-005	29C1	3rd. V. IF Plate Dec.
C55	470		110464	SI470	D6-471	5W5T5	GP2K-471	19C15	3rd. V. IF Screen
C56	5000		110586	BPD-005	DD-502	1D5D5	811-005	29C1	3rd. V. IF Fil.
C57	2.2		110438		TCZ-2.2				IF Coupling
C58	20		110499	SI20NP0	TCZ-20		NP0K-200		Fixed Trimmer
C59	5000		110586	BPD-005	DD-502	1D5D5	811-005	29C1	4th. V. IF Dec.
C60	5000		110586	BPD-005	DD-502	1D5D5	811-005	29C1	4th. V. IF Cathode
C61	5000		110586	BPD-005	DD-502	1D5D5	811-005	29C1	4th. V. IF Fil.
C62	5000		110586	BPD-005	DD-502	1D5D5	811-005	29C1	RF Bypass
C63	5000		110586	BPD-005	DD-502	1D5D5	811-005	29C1	V. Det.-Limiter Fil.
C64	5000		110586	BPD-005	DD-502	1D5D5	811-005	29C1	V. Amp. Screen
C65	.1	400	110546	P488-1	DF-104	PTE4P1		4TM-P1	Video Coupling
C66	68		110459	SI68	D6-680	5R5Q7	GP1K-680	19C10	Fixed Trimmer †
C67	.1	400	110546	P488-1	DF-104	PTE4P1		4TM-P1	Pic. Tube Cathode
C68	2.5		110484		TCZ-2.2				S. IF Coupling
C69	47		110458	SI47	D6-470	5W5Q5	GP1K-470	19C25	S. IF Coupling
C70	.022	400	110542	P488-022	DF-203	PTE4S2		4TM-S22	1st. S. IF Decoupling
C71	68		110459	SI68	D6-680	5R5Q7	GP1K-680	19C10	Fixed Trimmer
C72	47		110458	SI47	D6-470	5W5Q5	GP1K-470	19C25	S. IF Coupling
C73	10000		110672	BPD-01	DD-103	PTE4S1	821-01	36C1	2nd. S. IF Decoupling
C74	330		110454	SI330	D6-331	5W5T3	GP2-333-332	19C14	Diode Load Cap.
C75	.0033	400	110537	P688-0033	D6-332	PTE6D3		6TM-D33	De-emphasis
C76	.047	200	110660	P288-047	DF-503	PTE4S5		2TM-S47	Audio Coupling
C77	.0047	400	110538	P688-0047	D6-472	PTE6D5	GP2-333-472	6TM-D47	Audio Coupling
C78	.1	400	110546	P488-1	DF-104	PTE4P1		4TM-P1	AF Amp. Decoupling
C79	.01	400	110540	P488-01	D6-103	PTE4S1	821-01	4TM-S1	Audio Coupling
C80	.01	600	110555	P688-01	D6-103	PTE6S1	821-01	6TM-S1	Output Plate †
C81	.01	400	110540	P488-01	D6-103	PTE4S1	821-01	4TM-S1	Sync. Coupling
C82	.01	400	110540	P488-01	D6-103	PTE4S1	821-01	4TM-S1	Sync. Coupling
C83	.0022	400	110536	P688-0022	D6-222	PTE6D2	GP2-333-222	6TM-D22	Integrator Net
C84	.0047	400	110538	P688-0047	D6-472	PTE6D5	GP2-333-472	6TM-D47	Integrator Net
C85	.0047	400	110538	P688-0047	D6-472	PTE6D5	GP2-333-472	6TM-D47	Integrator Net
C86	.0047	400	110538	P688-0047	D6-472	PTE6D5	GP2-333-472	6TM-D47	Vert. Osc. Grid
C87	.25	600	110679	684-25		GT6P25		6TM-P25	Vert. Osc. Dec.
C88	.033	600	110558	P688-033		PTE6S3		6TM-S3	Vert. Discharge
C89	.22	400	110548	P488-22		GT4P25		4TM-P22	Vert. Sweep Coupling
C90	.047	1000	110572	P1088-047		GT16S5		MB-S5	Fixed Trimmer
C91	.001	600	110534	P688-001	D6-102	PTE6D1	GP2L-102	6TM-D1	Hor. Sync. Coupling
C92	.001	600	110534	P688-001	D6-102	PTE6D1	GP2L-102	6TM-D1	Hor. Sync. Coupling
C93	.068	1000		P1088-068					Hor. Feedback
C94	.022	600	110542	P688-022	DF-203	PTE6S2		6TM-S22	AFC Filter §
C95	.0047	400	110538	P688-0047	D6-472	PTE6D5	GP2-333-472	6TM-D47	AFC Filter
C96	.047	200	110660	P288-047	DF-503	PTE4S5		2TM-S47	AFC Filter
C97	.1	600	110561	P688-1	DF-104	PTE6P1		6TM-P1	Hor. MV Decoupling
C98	3900	500	110272	1464-004		1DR5D4		MS-24	Fixed Trimmer
C99	270	500	110289	1468-0003	D6-271	5W5T3	GP2K-271	1FM-33	Hor. MV. Feedback
C100	390	500	110216	1469-0004	D6-391	5R5T4	GP2K-391	MS-34	Hor. Descharge
C101	270	500	110289	1468-00025	D6-271	5W5T25	GP2K-271	1FM-325	Hor. Sweep Coupling
C102	.047	400	110544	P488-047	DF-503	PTE4S5		4TM-S47	Hor. Output Screen
C103	3900	500	110272	1464-004		1DR5D4		MS-24	Fixed Trimmer ♦
C104	.033	600	110558	P688-033		PTE653		6TM-S3	Damper Filter
C105	.1	600	110561	P688-1		PTE6P1		6TM-P1	Damper Filter
C106	.047	400	110544	P488-047	DF-503	PTE4S5		4TM-S47	Hor. Sweep Coupling #
C107	.0005	10000	110658	P10088-0005		PTE100T5		TVM-351	Voltage Doubler Cap.
C108	500	20000	110680	HV20A	TV1-502		410-501		H. V. Filter
C109	500	20000	110680	HV20A	TV1-502		410-501		H. V. Filter
C110	.01	1000	110568	P1088-01		PTE16S1		MB-S1	Line Filter
C111	.01	1000	110568	P1088-01		PTE16S1		MB-S1	Line Filter
C112	.0047	600	110538	P688-0047	D6-472	PTE6D5	GP2-333-472	6TM-D47	Tone Comp. ¶
C113	100		110451	SI100	D6-101	5W5T1	GP1K-101	19C11	AF Amp. Plate ¶
C114	470		110464	SI470	D6-471	5W5T5	GP2K-471	19C15	V. Amp. Cathode ¶
C115	5		110598	SI5	TCZ-4.7	5W5V5	GP1K-050	MS-55	V. Diode Filter ¶
C116	5000		110586	BPD-005	DD-502	1D5D5	811-005	29C1	4th. V. IF Plate Dec. ¶
C117	.0022	600	1110551	P688-0022	D6-222	PTE6D2	GP2-333-222	6TM-D22	Bypass **
C118	.22	400	110548	P488-22		GT4P25		4TM-P22	Decoupling ¶
C117	.22	400	110548	P488-22		GT4P25		4TM-P22	Decoupling ¶
C120	470		110464	SI470	D6-471	5W5T5	GP2K-471	19C15	Ant. Coupling ††
C121	470		110464	SI470	D6-471	5W5T5	GP2K-471	19C15	Ant. Coupling ††
C122	220		110462	SI220	D6-221	5W5T25	GP2K-221	19C13	Tone Comp. ‡‡
C123	.0047	600	110530	P688-0047	D6-472	PTE6D5	GP2-333-472	6TM-D47	Fixed Trimmer §
C124	150	3000							Damper Filter §

* Some models use .47MFD in this application and some models do not use this capacitor.
† Not used in series 16.
‡ Some models use .0047MFD in this application.
§ Not used in all models.
♦ Some models use 7500MMF in this application.
Some models use .22MFD in this application.
¶ Used only in series 16 and 116 models.
** Used only in series 16 and 116 models. Series 116 uses .1MFD in this application.
†† Used only in series 116.
‡‡ Used only in model 116RP.

CONTROLS

ITEM No.	RATING RESIST-ANCE	RATING WATTS	REPLACEMENT DATA Strom-Carl. PART No.	IRC PART No.	CLAROSTAT PART No.	CENTRALAB PART No.	INSTALLATION NOTES
R1A	50KΩ	½	145110 ■	Concentrikit B11-123 ø	RTV-31		Horizontal Hold Control - Front
B	2Meg	½		B11-139 ø			Vertical Hold Control - Rear
C	Shaft End			E-202 ø			Attach Per Instruction in "Concentrikit"
R2A	750Ω	½		Concentrikit B11-108 ø	RTV-148		Contrast Control - Front
B	100KΩ	½	145113 ▲	B11-128 ø			Brightness Control - Rear
C	Shaft End			E-202 ø			Attach Per Instructions in "Concentrikit"
R3A	250KΩ	½	145112 ▲	Q13-130	AG-64-Z	B-51-S ▲	Volume Control
B	Shaft		Not req.	RQ	RS-2 ▲	Not req.	Attach to R3A Per Instructions
C	Switch		Not req.	76-1	SWB	Not req.	Attach to R3A Per Instructions
R4	2250	4	145087		RTV-9	SVP-987	Focus Control - Wire Wound

CONTROLS (CO

ITEM No.	RATING RESIST-ANCE	RATING WATTS	REPLACEMENT DATA Strom-Carl. PART No.	IRC PART No.	CLAROSTA PART No.
R5A	5000	½	145079	Q11-114	AG-19-S
B	Shaft		Not req.	Not req.	FKS-1/4
R6A	6Meg	½	145100		AM-86-S
B	Shaft		Not req.		FKS-1/4
R7	500KΩ	½	145107 *		

* 116 series receivers use control with part number 145120.
■ 16 series receivers use control with part number 145102.
ø Additional parts to be used in "Concentrikit".
▲ Fashion shaft to duplicate original.
▲ 16 series receivers use a dual volume and contrast control w of high-low-phono SW. Part number 145108.
Note 1. Not used in 17 series receivers.

RESIST

ITEM No.	RATING RESISTANCE	RATING WATTS	REPLACEMENT DATA STROM-CARL PART No.	IRC PART No.	A
R8	1000Ω 20%	½	149101	BTS-1000	A
R9	2000Ω 5%	½	149103		Hi
R10	33KΩ 20%	½	149110	BTS-33K	Hi
R11	1000Ω 20%	½	149101	BTS-1000	Hi
R12	150Ω 20%	½	149096	BTS-150	Hi
R13	1000Ω 20%	½	149101	BTS-1000	Hi
R14	2700Ω 20%	½	28163	BTS-2700	Hi
R15	4700Ω 20%	½	149105	BTS-4700	Hi
R16	560Ω	½	28155	BTS-560	Lo
R17	33KΩ 20%	½	149110	BTS-33K	Lo
R18	1000Ω	½	149101	BTS-1000	Lo
R19	150Ω 20%	½	149096	BTS-150	Lo
R20	2200Ω	½	149103	BTS-2200	Im
R21	10KΩ 20%	½	149107		Lo
R22	1000Ω	½	149101	BTS-1000	Lo
R23	100KΩ 20%	½	149113		Co
R24	4700Ω 20%	½	149105	BTS-4700	Co
R25	150Ω 20%	½	149096	BTS-150	Co
R26	10KΩ 20%	½	149107		Lo
R27	4700Ω 20%	½	149105	BTS-4700	Lo
R28	150Ω 20%	½	149096	BTS-150	Lo
R29	1000Ω	2	149044	BTB-1000	De
R30	100Ω	½	149095	BTS-100	De
R31	330Ω	½	149098	BTS-330	AG
R32	330Ω	½	149098	BTS-330	AG
R33	10KΩ	½	28170	BTS-10K	1st
R34	82Ω	½	28145	BTS-82	1st
R35	1500Ω	½		BTS-1500	1st
R36	100Ω	½	149095	BTS-100	AG
R37	12KΩ	½			2nd
R38	82Ω	½	28145	BTS-82	2nd
R39	1500Ω	½		BTS-1500	2nd
R40	100Ω	½	149095	BTS-100	1st
R41	100Ω	½	149095	BTS-100	De
R42	100Ω	½	149095	BTS-100	AG
R43	6800Ω	½	28168		3rd
R44	6800Ω	½	28168		3rd
R45	82Ω	½	28145	BTS-82	3rd
R46	100Ω	½	149095	BTS-100	3rd
R47	100Ω	½	149095	BTS-100	De
R48	39KΩ	½	28176	BTS-39K	De
R49	100Ω	½	149095	BTS-100	De
R50	10KΩ 20%	½	149107	BTS-10K	4th
R51	220Ω	1		BTA-220	4th
R52	100Ω	½	149095	BTS-100	4th
R53	47KΩ 20%	½	149111	BTS-47K	Key
R54	27KΩ 20%	½	28174	BTS-27K	AG
R55	3300Ω	½		BTS-3300	Vic
R56	22Ω	2	149027	BW-2-22	Bia
R57	18Ω	1		BW-1-18	Vic
R58	10KΩ	2	149082	BTB-10K	Vic
R59	1200Ω	2		BTB-1200	Vic
R60	2700Ω	2	149356	BTB-2700	Vic
R61	470KΩ	1	149117	BTA-470K	DC
R62	220KΩ 20%	½	149115	BTS-220K	Vol
R63	4700Ω 20%	½	149103	BTS-4700	Pic
R64	100KΩ 20%	½	149113	BTS-100K	Pic
R65	47KΩ	½	149111	BTS-47K	1st
R66	15KΩ	½	149108	BTS-15K	1st
R67	47KΩ	½	149111	BTS-47K	2nd
R68	15KΩ	½	149108	BTS-15K	2nd
R69	22KΩ	½	27407	BTS-22K	Rat
R70	22KΩ	½	27407	BTS-22K	Rat
R71	18KΩ	½	28173	BTS-18K	De
R72	10Meg	½	149125	BTS-10Meg	AF
R73	470KΩ	1	149117	BTA-470K	AF
R74	47KΩ	½	149111	BTS-47K	AF
R75	470KΩ	½	149117	BTS-470K	Out
R76	270Ω	1	149170	BTA-270	Out
R77	33KΩ 20%	½	149110	BTS-33K	Vol
R78	330KΩ 20%	½	149116	BTS-330K	1st
R79	1Meg 20%	½	149119	BTS-1Meg	2nd
R80	100KΩ 20%	½	149113	BTS-100K	2nd
R81	47KΩ 20%	½	149111	BTS-47K	Vol
R82	1Meg 20%	½	149119	BTS-1Meg	Syn
R83	2700Ω	½	28163	BTS-2700	Syn
R84	1200Ω	½	28159	BTS-1200	Syn
R85	3900Ω 5%	½	28165	BTS-3900-5%	Syn
R86	22KΩ	½	149109	BTS-22K	Int
R87	8200Ω	½	28169	BTS-8200	Int
R88	8200Ω	½	28169	BTS-8200	Int
R89	1Meg 20%	½	149119	BTS-1Meg	Ve
R90	1.8Meg	½	28194	BTS-1.8Meg	Ve
R91	2.2Meg 20%	½	28195	BTS-2.2Meg	Ve
R92	10KΩ 20%	½	149107	BTS-10K	Ve
R93	10KΩ 20%	½	149107	BTS-10K	Ve
R94	2.2Meg 20%	½	28195	BTS-2.2Meg	Ve
R95	820Ω	½	28157	BTS-820	Ve
R96	100KΩ	½	28006	BTS-100K	Ho
R97	100KΩ	½	28006	BTS-100K	Ho
R98	100KΩ	½	28006	BTS-100K	Ho

PARTS LIST AND DESCRIPTIONS (Continued)

CONTROLS (CONT.)

ITEM No.	RATING RESISTANCE	RATING WATTS	REPLACEMENT DATA Strom-Carl. PART No.	REPLACEMENT DATA IRC PART No.	REPLACEMENT DATA CLAROSTAT PART No.	REPLACEMENT DATA CENTRALAB PART No.	INSTALLATION NOTES
R5A	5000	½	145079	Q11-114	AG-19-S	AN-10	Vertical Linearity Control
B	Shaft		Not req.	Not req.	FKS-1/4	AK-1	Attach to R5A Per Instructions
R6A	6Meg	½	145100		AM-86-S	AN-87	Vertical Size Control
B	Shaft		Not req.		FKS-1/4	AK-1	Attach to R6A Per Instructions
R7	500KΩ	½	145107 *				Tone Control - See Note 1

* 116 series receivers use control with part number 145120.
■ 16 series receivers use control with part number 145102.
ø Additional parts to be used in "Concentrikit".
▲ Fashion shaft to duplicate original.
▰ 16 series receivers use a dual volume and contrast control with part number 145085: the brightness control mounts on the rear of high-low-phono SW. Part number 145108.
Note 1. Not used in 17 series receivers.

RESISTORS

ITEM No.	RATING RESISTANCE	RATING WATTS	REPLACEMENT DATA STROM-CARL PART No.	REPLACEMENT DATA IRC PART No.	IDENTIFICATION CODES ALL RESISTORS ±10% UNLESS OTHERWISE SPECIFIED
R8	1000Ω 20%	½	149101	BTS-1000	AGC Network
R9	2000Ω 5%	½	149103		High-Band RF Amp. Grid - See Note 4
R10	33KΩ 20%	½	149110	BTS-33K	High-Band RF Amp. Screen
R11	1000Ω 20%	½	149101	BTS-1000	High-Band RF Amp. Plate Decoupling
R12	150Ω 20%	½	149096	BTS-150	High-Band RF Amp. Decoupling
R13	1000Ω 20%	½	149101	BTS-1000	High-Band Converter Grid
R14	2700Ω 20%	½	28163	BTS-2700	High-Band Oscillator Grid
R15	4700Ω 20%	½	149105	BTS-4700	High-Band Oscillator Plate
R16	560Ω	½	28155	BTS-560	Low-Band RF Amp. Grid
R17	33KΩ 20%	½	149110	BTS-33K	Low-Band RF Amp. Screen
R18	1000Ω	½	149101	BTS-1000	Low-Band RF Amp. Plate Decoupling - See Note 3
R19	150Ω 20%	½	149096	BTS-150	Low-Band RF Amp. Decoupling
R20	2200Ω	½	149103	BTS-2200	Image Rejection Trap Shunt
R21	10KΩ 20%	½	149107		Low-Band Converter Grid Coil Shunt
R22	1000Ω	½	149101	BTS-1000	Low-Band Converter Grid - See Note 3
R23	100KΩ 20%	½	149113		Converter Grid
R24	4700Ω 20%	½	149105	BTS-4700	Converter Plate Coil Shunt
R25	150Ω 20%	½	149096	BTS-150	Converter Plate Decoupling
R26	10KΩ 20%	½	149107		Low-Band Oscillator Grid
R27	4700Ω 20%	½	149105	BTS-4700	Low-Band Oscillator Plate
R28	150Ω 20%	½	149096	BTS-150	Low-Band Oscillator Plate Decoupling
R29	1000Ω	2	149044	BTB-1000	Decoupling
R30	100Ω	½	149095	BTS-100	Decoupling - See Note 3
R31	330Ω	½	149098	BTS-330	AGC Network - See Note 3
R32	330Ω	½	149098	BTS-330	AGC Network - See Note 3
R33	10KΩ	½	28170	BTS-10K	1st Video IF Transformer Shunt
R34	82Ω	½	28145	BTS-82	1st Video IF Amp. Cathode
R35	1500Ω	½		BTS-1500	1st Video IF Amp. Screen - See Note 5
R36	100Ω	½	149095	BTS-100	AGC Network - See Note 3
R37	12KΩ	½			2nd Video IF Transformer Shunt - See Note 6
R38	82Ω	½	28145	BTS-82	2nd Video IF Amp. Cathode
R39	1500Ω	½		BTS-1500	2nd Video IF Amp. Screen - See Note 5
R40	100Ω	½	149095	BTS-100	1st Video IF Amp. Plate Decoupling - See Note 3
R41	100Ω	½	149095	BTS-100	Decoupling - See Note 3
R42	100Ω	½	149095	BTS-100	AGC Network - See Note 3
R43	6800Ω	½	28168		3rd Video IF Transformer Shunt - See Note 14
R44	6800Ω	½	28168		3rd Video IF Transformer Shunt - See Note 14
R45	82Ω	½	28145	BTS-82	3rd Video IF Amp. Cathode
R46	100Ω	½	149095	BTS-100	3rd Video IF Amp. Plate Decoupling - See Note 3
R47	100Ω	½	149095	BTS-100	Decoupling - See Note 3
R48	39KΩ	½	28176	BTS-39K	Decoupling
R49	100Ω	½	149095	BTS-100	Decoupling - See Note 3
R50	10KΩ 20%	½	149107	BTS-10K	4th Video IF Transformer Shunt - See Note 6
R51	220Ω	1		BTA-220	4th Video IF Amp. Cathode - See Note 7
R52	100Ω	½	149095	BTS-100	4th Video IF Amp. Decoupling - See Note 3
R53	47KΩ 20%	½	149111	BTS-47K	Keyed AGC Grid
R54	27KΩ 20%	½	28174	BTS-27K	AGC Network
R55	3300Ω	½		BTS-3300	Video Det. Diode Load - See Note 8
R56	22Ω	2	149027	BW-2-22	Bias Network - See Note 9
R57	18Ω	1		BW-1-18	Video Amp. Cathode - Wire Wound - See Note 9 and 10
R58	10KΩ	2	149082	BTB-10K	Video Amp. Screen
R59	1200Ω	2		BTB-1200	Video Amp. Plate - See Note 2 and 4
R60	2700Ω	2	149356	BTB-2700	Video Amp. Plate - See Note 11
R61	470KΩ	1	149117	BTA-470K	DC Restorer Diode Load
R62	220KΩ 20%	½	149115	BTS-220K	Voltage Divider - See Note 2
R63	4700Ω 20%	½	149103	BTS-4700	Picture Tube Grid - See Note 4
R64	100KΩ 20%	½	149113	BTS-100K	Picture Tube Cathode
R65	47KΩ	½	149111	BTS-47K	1st Sound IF Amp. Grid
R66	15KΩ	½	149108	BTS-15K	1st Sound IF Amp. Decoupling
R67	47KΩ	½	149111	BTS-47K	2nd Sound IF Amp. Grid
R68	15KΩ	½	149108	BTS-15K	2nd Sound IF Amp. Decoupling
R69	22KΩ	½	27407	BTS-22K	Ratio Det. Diode Load
R70	22KΩ	½	27407	BTS-22K	Ratio Det. Diode Load
R71	18KΩ	½	28173	BTS-18K	De-emphasis
R72	10Meg	½	149125	BTS-10Meg	AF Amp. Grid
R73	470KΩ	1	149117	BTA-470K	AF Amp. Plate
R74	47KΩ	½	149111	BTS-47K	AF Amp. Plate Decoupling
R75	470KΩ	½	149117	BTS-470K	Output Grid - See Note 16
R76	270Ω	1	149170	BTA-270	Output Cathode
R77	33KΩ 20%	½	149110	BTS-33K	Voltage Divider
R78	330KΩ 20%	½	149116	BTS-330K	1st Sync. Clipper Plate
R79	1Meg 20%	½	149119	BTS-1Meg	2nd Sync. Clipper Grid
R80	100KΩ 20%	½	149113	BTS-100K	2nd Sync. Clipper Plate
R81	47KΩ 20%	½	149111	BTS-47K	Voltage Divider
R82	1Meg 20%	½	149119	BTS-1Meg	Sync. Amp. Phase Inv. Grid
R83	2700Ω	½	28163	BTS-2700	Sync. Amp.-Phase Inv. Cathode
R84	1200Ω	½	28159	BTS-1200	Sync. Amp. - Phase Inv. Cathode
R85	3900Ω 5%	½	28165	BTS-3900-5%	Sync. Amp.-Phase Inv. Plate
R86	22KΩ	½	149109	BTS-22K	Integrator
R87	8200Ω	½	28169	BTS-8200	Integrator
R88	8200Ω	½	28169	BTS-8200	Integrator
R89	1Meg 20%	½	149119	BTS-1Meg	Vert. Osc. Grid
R90	1.8Meg	½	28194	BTS-1.8Meg	Vertical Oscillator Plate
R91	2.2Meg 20%	½	28195	BTS-2.2Meg	Vertical Oscillator Plate Decoupling
R92	10KΩ 20%	½	149107	BTS-10K	Vertical Peaking
R93	10KΩ 20%	½	149107	BTS-10K	Vertical Osc. Transformer Shunt - See Note 2
R94	2.2Meg 20%	½	28195	BTS-2.2Meg	Vertical Amp. Grid
R95	820Ω	½	28157	BTS-820	Vertical Amp. Cathode - See Note 2
R96	100KΩ	½	28006	BTS-100K	Horizontal Phase Det. Diode Load
R97	100KΩ	½	28006	BTS-100K	Horizontal Phase Det. Diode Load
R98	100KΩ	½	28006	BTS-100K	Horizontal AFC Filter - See Note 15

ITEM No.	RATING RESISTANCE	RATING WATTS	R STROM PART
R99	330KΩ	½	149116
R100	1500Ω	½	149102
R101	5600Ω 20%	½	149184
R102	100KΩ 20%	½	149113
R103	270KΩ	½	28184
R104	8200Ω 20%	1	
R105	68Ω	½	149094
R106	1Meg 20%	½	149119
R107	12KΩ	2	149055
R108	33Ω	2	149029
R109	680KΩ	1	149368
R110	680KΩ	1	149368
R111	680KΩ	1	149368
R112	680KΩ	1	149368
R113	3000Ω	10	149365
R114	1200Ω	20	149366
R115	100KΩ 20%	½	149113
R116	100KΩ 20%	½	149113
R117	100KΩ 20%	½	149113
R118	100KΩ 20%	½	149113
R119	33Ω	2	149029
R120	220Ω	2	149072
R121	330KΩ	½	28185
R122	8200Ω	1	37200
R123	120Ω	½	28147
R124	1000Ω	½	149101
R125	27KΩ	½	28174
R126	4.7Meg	½	149123
R127	330KΩ	1	28185
R128	6.8Meg	½	149124
R129	1Meg	½	149119
R130	100KΩ	½	149113
R131	100KΩ	½	149113
R132	470Ω	1	149136
R133	4.7Ω	1	149282
R134	470KΩ	½	149117

Note 2. Not used in all models.
Note 3. Some models use 2.2 mi
Note 4. Some models use 2200Ω
Note 5. Some models use 1000Ω
Note 6. Some models use 6800Ω
Note 7. Some models use 150Ω re
Note 8. Some models use 4700Ω
Note 9. Some models use 12Ω res
Note 10. Some models use 22Ω re
Note 11. Some models use 1800Ω
Note 12. Some models use 68Ω re
Note 13. Some models use 18KΩ r
Note 14. Some models use single
Note 15. Some models use single
Note 16. Some models use series
Note 17. Some models use 100KΩ

ITEM No.	RATING PRI.	RATING SEC. 1	RATING SEC. 2
T1	117VAC @ 2.3A	880VCT .250ADC	5VAC @ 3A

T

ITEM No.	RATING DC RESISTANCE PRI.	RATING DC RESISTANCE SEC.	STROM PART
T2	170Ω	950Ω	114658
T3	113Ω	63Ω	161029
	Tap 40Ω	Taps ⑥ 50Ω and 59Ω	161040
	SEC. 2	SEC. 3	
	2.1Ω	0Ω	
		SEC. 4	
		0Ω	
T4	1.1KΩ		161252
	Tap 10.5Ω		
T5A	19Ω		
B	46Ω		
T6	1.4KΩ		114683
			114687

③ Drill one new mounting hole.
④ Used with 16RP4 and 16TP4 tube
⑤ Used with 16KP4 tube.
⑥ Used in some models.

ITEM No.	RATING IMPEDANCE PRI.	RATING IMPEDANCE SEC.	RATING DC RES. PRI.	RATING DC RES. SEC.
T7	5.5KΩ	2.7Ω	450Ω	.3Ω

ITEM No.	RATINGS FIELD RES.	RATINGS V. C. IMP.
SP1A	PM	2.7Ω
B	PM	2.7Ω
	CONE DIA.	V. C. DIA.
SP2A	5 1/2"	9/16"
	12"	1"

SPRAGUE PART No.	IDENTIFICATION CODES AND INSTALLATION NOTES
29C1	AGC Filter
29C1	2nd. V. IF Plate Dec.
9C15	2nd. V. IF Screen
29C1	2nd. V. IF Fil.
	IF Coupling
29C1	AGC Filter
4TM-P22	RF Bypass
29C1	RF Bypass
29C1	3rd. V. IF Plate Dec.
9C15	3rd. V. IF Screen
29C1	3rd. V. IF Fil.
	IF Coupling
	Fixed Trimmer
29C1	4th. V. IF Dec.
29C1	4th. V. IF Cathode
29C1	4th. V. IF Fil.
29C1	RF Bypass
29C1	V. Det.-Limiter Fil.
29C1	V. Amp. Screen
4TM-P1	Video Coupling
9C10	Fixed Trimmer †
4TM-P1	Pic. Tube Cathode
	S. IF Coupling
9C25	S. IF Coupling
4TM-S22	1st. S. IF Decoupling
9C10	Fixed Trimmer
9C25	S. IF Coupling
6C1	2nd. S. IF Decoupling
9C14	Diode Load Cap.
5TM-D33	De-emphasis
2TM-S47	Audio Coupling
5TM-D47	Audio Coupling
4TM-P1	AF Amp. Decoupling
4TM-S1	Audio Coupling
6TM-S1	Output Plate ‡
4TM-S1	Sync. Coupling
4TM-S1	Sync. Coupling
6TM-D22	Integrator Net
6TM-D47	Integrator Net
6TM-D47	Integrator Net
6TM-D47	Vert. Osc. Grid
6TM-P25	Vert. Osc. Dec.
6TM-S3	Vert. Discharge
4TM-P22	Vert. Sweep Coupling
MB-S5	Fixed Trimmer
6TM-D1	Hor. Sync. Coupling
5TM-D1	Hor. Sync. Coupling
	Hor. Feedback
6TM-S22	AFC Filter §
5TM-D47	AFC Filter
2TM-S47	AFC Filter
5TM-P1	Hor. MV Decoupling
MS-24	Fixed Trimmer
FM-33	Hor. MV. Feedback
MS-34	Hor. Descharge
FM-325	Hor. Sweep Coupling
4TM-S47	Hor. Output Screen
MS-24	Fixed Trimmer ♦
5TM-S3	Damper Filter
5TM-P1	Damper Filter
4TM-S47	Hor. Sweep Coupling #
TVM-351	Voltage Doubler Cap.
	H. V. Filter
	H. V. Filter
MB-S1	Line Filter
MB-S1	Line Filter
5TM-D47	Tone Comp. ¶
9C11	AF Amp. Plate ¶
9C15	V. Amp. Cathode ¶
MS-55	V. Diode Filter ¶
9C1	4th. V. IF Plate Dec. ¶
TM-D22	Bypass **
4TM-P22	Decoupling ¶
4TM-P22	Decoupling ¶
19C15	Ant. Coupling ††
19C15	Ant. Coupling ††
19C13	Tone Comp. ††
6TM-D47	Fixed Trimmer §
	Damper Filter §

eitor.

LATION NOTES
ntal Hold Control - Front
l Hold Control - Rear
Per Instruction in "Concentrikit"
st Control - Front
ness Control - Rear
Per Instructions in "Concentrikit"
Control
to R3A Per Instructions
to R3A Per Instructions
Control - Wire Wound

IPTIONS (Continued)

ONT.)

AT o.	CENTRALAB PART No.	INSTALLATION NOTES
	AN-10	Vertical Linearity Control
	AK-1	Attach to R5A Per Instructions
	AN-87	Vertical Size Control
	AK-1	Attach to R6A Per Instructions
		Tone Control - See Note 1

with part number 145085: the brightness control mounts on the rear

TORS

IDENTIFICATION CODES
ALL RESISTORS ±10% UNLESS OTHERWISE SPECIFIED

AGC Network
High-Band RF Amp. Grid - See Note 4
High-Band RF Amp. Screen
High-Band RF Amp. Plate Decoupling
High-Band RF Amp. Decoupling
High-Band Converter Grid
High-Band Oscillator Grid
High-Band Oscillator Plate
Low-Band RF Amp. Grid
Low-Band RF Amp. Screen
Low-Band RF Amp. Plate Decoupling - See Note 3
Low-Band RF Amp. Decoupling
Image Rejection Trap Shunt
Low-Band Converter Grid Coil Shunt
Low-Band Converter Grid - See Note 3
Converter Grid
Converter Plate Coil Shunt
Converter Plate Decoupling
Low-Band Oscillator Grid
Low-Band Oscillator Plate
Low-Band Oscillator Plate Decoupling
Decoupling
Decoupling - See Note 3
AGC Network - See Note 3
AGC Network - See Note 3
1st Video IF Transformer Shunt
1st Video IF Amp. Cathode
1st Video IF Amp. Screen - See Note 5
AGC Network - See Note 3
2nd Video IF Transformer Shunt - See Note 6
2nd Video IF Amp. Cathode
2nd Video IF Amp. Screen - See Note 5
1st Video IF Amp. Plate Decoupling - See Note 3
Decoupling - See Note 3
AGC Network - See Note 3
3rd Video IF Transformer Shunt - See Note 14
3rd Video IF Transformer Shunt - See Note 14
3rd Video IF Amp. Cathode
3rd Video IF Amp. Plate Decoupling - See Note 3
Decoupling - See Note 3
Decoupling
Decoupling - See Note 3
4th Video IF Transformer Shunt - See Note 6
4th Video IF Amp. Cathode - See Note 7
4th Video IF Amp. Decoupling - See Note 3
Keyed AGC Grid
AGC Network
Video Det. Diode Load - See Note 8
Bias Network - See Note 9
Video Amp. Cathode - Wire Wound - See Note 9 and 10
Video Amp. Screen
Video Amp. Plate - See Note 2 and 4
Video Amp. Plate - See Note 11
DC Restorer Diode Load
Voltage Divider - See Note 2
Picture Tube Grid - See Note 4
Picture Tube Cathode
1st Sound IF Amp. Grid
1st Sound IF Amp. Decoupling
2nd Sound IF Amp. Grid
2nd Sound IF Amp. Decoupling
Ratio Det. Diode Load
Ratio Det. Diode Load
De-emphasis
AF Amp. Grid
AF Amp. Plate
AF Amp. Plate Decoupling
Output Grid - See Note 16
Output Cathode
Voltage Divider
1st Sync. Clipper Plate
2nd Sync. Clipper Grid
2nd Sync. Clipper Plate
Voltage Divider
Sync. Amp. Phase Inv. Grid
Sync. Amp.-Phase Inv. Cathode
Sync. Amp. - Phase Inv. Cathode
Sync. Amp.-Phase Inv. Plate
Integrator
Integrator
Integrator
Vert. Osc. Grid
Vertical Oscillator Plate
Vertical Oscillator Plate Decoupling
Vertical Peaking
Vertical Osc. Transformer Shunt - See Note 2
Vertical Amp. Grid
Vertical Amp. Cathode - See Note 2
Horizontal Phase Det. Diode Load
Horizontal Phase Det. Diode Load
Horizontal AFC Filter - See Note 15

RESISTORS (CONT.)

ITEM No.	RATING RESISTANCE	RATING WATTS	REPLACEMENT DATA STROM-CARL PART No.	REPLACEMENT DATA IRC PART No.	IDENTIFICATION CODES
R99	330KΩ	½	149116	BTS-330K	Horizontal AFC Filter - See Note 15
R100	1500Ω	½	149102	BTS-1500	Horizontal MV Cathode
R101	5600Ω 20%	½	149184	BTS-5600	Horizontal MV Plate
R102	100KΩ 20%	½	149113	BTS-100K	Horizontal MV Grid
R103	270KΩ	½	28184	BTS-270K	Horizontal MV Plate
R104	8200Ω 20%	1		BTA-8200	Horizontal MV Decoupling - See Note 4
R105	68Ω	½	149094		Parasitic Suppressor
R106	1Meg 20%	½	149119	BTS-1Meg	Horizontal Output Grid
R107	12KΩ	2	149055	BTB-12K	Horizontal Output Screen
R108	33Ω	2	149029	BW-2-33	Horizontal Feedback - Wire Wound - See Note 2
R109	680KΩ	1	149368	BTA-680K	HV Rectifier Load
R110	680KΩ	1	149368	BTA-680K	HV Rectifier Load
R111	680KΩ	1	149368	BTA-680K	HV Rectifier Load
R112	680KΩ	1	149368	BTA-680K	HV Rectifier Load
R113	3000Ω	10	149365	1 3/4A-3000	Decoupling - Wire Wound
R114	1200Ω	20	149366	2D-1200	Voltage Divider - Wire Wound
R115	100KΩ 20%	½	149113	BTS-100K	Filter
R116	100KΩ 20%	½	149113	BTS-100K	Filter
R117	100KΩ 20%	½	149113	BTS-100K	Filter
R118	100KΩ 20%	½	149113	BTS-100K	Filter
R119	33Ω	2	149029	BW-2-33	Damping
R120	220Ω	2	149072	BW-2-220	Focus Coil Shunt - See Notes 2 and 12
R121	330KΩ	½	28185	BTS-330K	Trap Coil Shunt - See Note 2
R122	8200Ω	1	37200	BTA-8200	4th Video IF Amp. Plate Decoupling - See Note 2
R123	120Ω	½	28147		Parasitic Suppressor - See Note 2
R124	1000Ω	½	149101	BTS-1000	Acc. Anode Load - See Note 2
R125	27KΩ	½	28174	BTS-27K	Voltage Divider - See Notes 2 and 13
R126	4.7Meg	½	149123	BTS-4.7Meg	Horizontal Phase Det. Diode Load - See Note 2
R127	330KΩ	1	28185	BTA-330K	Horizontal Output Screen - See Note 2
R128	6.8Meg	½	149124	BTS-6.8Meg	Voltage Divider - See Note 2
R129	1Meg	½	149119	BTS-1Meg	Voltage Divider - See Note 17.
R130	100KΩ	½	149113	BTS-100K	Bleeder - See Note 2
R131	100KΩ	½	149113	BTS-100K	Bleeder - See Note 2
R132	470Ω	1	149136	BTA-470	Vertical Amp. Decoupling - See Note 2
R133	4.7Ω	1	149282		Horizontal Feedback Transformer Shunt - See Note 2
R134	470KΩ	½	149117	BTS-470K	Series Phono Input - See Note 2

Note 2. Not used in all models.
Note 3. Some models use 2.2 microhenries choke in this application.
Note 4. Some models use 2200Ω resistors in this application.
Note 5. Some models use 1000Ω resistor in this application.
Note 6. Some models use 6800Ω resistor in this application.
Note 7. Some models use 150Ω resistor in this application.
Note 8. Some models use 4700Ω resistor in this application.
Note 9. Some models use 12Ω resistor in this application.
Note 10. Some models use 22Ω resistor in this application.
Note 11. Some models use 1800Ω resistor in this application.
Note 12. Some models use 68Ω resistor in this application.
Note 13. Some models use 18KΩ resistor in this application.
Note 14. Some models use single 3300Ω resistor in place of R43 and R44.
Note 15. Some models use single 470KΩ resistor in place of R98 and R99.
Note 16. Some models use series resistor in this application to obtain desired value.
Note 17. Some models use 100KΩ resistor in this application.

TRANSFORMER (POWER)

ITEM No.	RATING PRI.	RATING SEC. 1	RATING SEC. 2	RATING SEC. 3	REPLACEMENT DATA STROM-CARL PART No.	STANCOR PART No.	MERIT PART No.	CHICAGO PART No.
T 1	117VAC @ 2.3A	880VCT .250ADC	5VAC @ 3A	6.3VAC @ 1.2A SEC. 4 6.3VAC @ 9.4A	161423			

TRANSFORMER (SWEEP CIRCUITS)

ITEM No.	RATING DC RESISTANCE PRI.	RATING DC RESISTANCE SEC.	REPLACEMENT DATA STROM-CARL PART No.	STANCOR PART No.	MERIT PART No.	CHICAGO PART No.	NOTES
T2	170Ω	950Ω	114658	A-8122	A-4000 ③	TB0-2	Vertical Block Osc. Trans
T3	113Ω	63Ω	161029				Horizontal Output Trans.
	Tap 40Ω	Taps @ 50Ω and 59Ω	161040 ⑥				
	SEC. 2	SEC. 3					
	2.1Ω	0Ω					
		SEC. 4					
		0Ω					
T4	1.1KΩ		161252	A-8123	A-3037	TS0-5 ③	Vertical Output Trans.
	Tap 10.5Ω						
T5A	19Ω				MDF-70		Horizontal Deflection Coil
B	46Ω						Vertical Deflection Coil
T6	1.4KΩ		114683 ④ 114687 ⑤				Focus Coil

③ Drill one new mounting hole.
④ Used with 16RP4 and 16TP4 tubes.
⑤ Used with 16KP4 tube.
⑥ Used in some models.

TRANSFORMER (AUDIO OUTPUT)

ITEM No.	RATING IMPEDANCE PRI.	RATING IMPEDANCE SEC.	RATING DC RES. PRI.	RATING DC RES. SEC.	REPLACEMENT DATA STROM-CARL PART No.	STANCOR PART No.	MERIT PART No.	CHICAGO PART No.	INSTALLATION NOTES
T7	5.5KΩ	2.7Ω	450Ω	.3Ω	161249	A-3877 ③	A-3019 ③	R0-9 ③	③ Drill one new mounting hole.

SPEAKER

ITEM No.	RATINGS FIELD RES.	RATINGS V. C. IMP.	REPLACEMENT DATA STROM-CARL PART No.	VIKING PART No.	QUAM PART No.	NOTES
SP1A	PM	2.7Ω	155168 ①	525J4		① All chassis carrying "T" suffix in its model number use 5 1/2" speaker with one of the following part numbers 155168 or 155121.
B	PM	2.7Ω	155181 ②	12J12	12A4A	② All chassis carrying "C" or "RP" suffix in its models number use 12" speaker with one of the following part numbers 155181, 155169 or 155154.
	CONE DIA.	V. C. DIA.				
SP2A	5 1/2"	9/16"				
	12"	1"				

PARTS LIST AND DESCRIPTIONS (Continued)

FILTER CHOKE

ITEM No.	RATINGS: TOTAL DIRECT CURRENT	RATINGS: D. C. RESISTANCE	RATINGS: INDUCTANCE (0 CURRENT 1000 ∿)	REPLACEMENT DATA: Strom-Carl. PART No.	REPLACEMENT DATA: STANCOR PART No.	REPLACEMENT DATA: MERIT PART No.	REPLACEMENT DATA: CHICAGO PART No.	INSTALLATION NOTES
L1	.250	87Ω	2.3 Henries	161020		C-2991 ③	TR3300 ③	③ Drill one new mounting hole.

COILS (RF-IF)

ITEM No.	USE	DC RES. PRI.	DC RES. SEC.	REPLACEMENT DATA: STROM-CARL PART No.	REPLACEMENT DATA: MEISSNER PART No.	REPLACEMENT DATA: IRC PART No.	NOTES
L2	Low-Band Ant. Trans.	0Ω	.1Ω	114057			
L3	High-Band Ant. Trans.	0Ω	0Ω	114676			
L4	RF Choke	1.8Ω		114693		CLA	2.2 Microhenries
L5	Low-Band RF Primary	.1Ω		114065			
L6	Low-Band Image Trap	0Ω		114642			
L7	Low-Band RF Secondary	.1Ω		114065			
L8	RF Choke	1.8Ω		114693		CLA	2.2 Microhenries (Some models use 1KΩ resistor)
L9	Low-Band Osc. Coil	.2Ω		114065			
L10	High-Band RF Primary	0Ω		114066			
L11	High-Band RF Coil Link	0Ω		20608			
L12	High-Band RF Secondary	0Ω		114066			
L13	High-Band Osc. Coil	0Ω		114066			
L14	RF Choke	.1Ω		114060			
L15	Conv. Plate Coil	.1Ω		114061			
L16	RF Choke	1.8Ω		114693		CLA	2.2 Microhenries (Some models use 330Ω resistor.
L17	1st Video IF	.1Ω	1.2Ω	114377			
L18	RF Choke	1.8Ω		114693		CLA	2.2 Microhenries (Some models use 330Ω resistor)
L19	RF Choke	1.8Ω		114693		CLA	2.2 Microhenries (Some models use 100Ω resistor)
L20	2nd Video IF	1Ω	1Ω	114376			
L21	RF Choke	1.8Ω		114693		CLA	2.2 Microhenries (Some models use 100Ω resistor
L22	RF Choke	1.8Ω		114693		CLA	2.2 Microhenries (Some models use 100Ω resistor)
L23	RF Choke	1.8Ω		114693		CLA	2.2 Microhenries (Some models use 100Ω resistor)
L24	Sound Trap	2Ω		114384			
L25	3rd Video IF	1Ω	1Ω	114376			
L26	RF Choke	1.8Ω		114693		CLA	2.2 Microhenries (Some models use 100Ω resistor)
L27	RF Choke	1.8Ω		114693		CLA	2.2 Microhenries (Some models use 100Ω resistor)
L28	Sound Trap	.1Ω		114394			
L29	4th Video IF	.4Ω	.4Ω	114382			
L30	RF Choke	1.8Ω		114693		CLA	2.2 Microhenries (Some models use 100Ω resistor)
L31	RF Choke	1.8Ω		114693		CLA	2.2 Microhenries (Some models use 100Ω resistor)
L32	RF Choke	1.8Ω		114693		CLA	2.2 Microhenries (Some models use 100Ω resistor)
L33	5th Video IF	1Ω	1Ω	114376			
L34	Peaking	22Ω		114714			Yellow Dot (17 series only)
L35A	Peaking	12Ω		114715			Wound on 15K resistor (series 17)
B	Peaking			114669			75 Microhenries (16 and 116 series)
L36	Peaking	14Ω		114714			17 series only
L37A	4.5MC Trap	1.9Ω		114392			17 series
B	Peaking			114704			Wound on 8.2KΩ resistor
L38A	Peaking	9Ω		114713			17 series only
B	Peaking			114705			400 Microhenries (16 and 116 series)
L39	1st Sound IF	5.8Ω		114374			
L40	2nd Sound IF	1.9Ω		114383			
L41	Ratio Det. Trans.	5.5Ω	.8Ω	114375			
L42	Horiz. Osc. Trans.	115Ω		114069			
L43	Horiz. AFC Coil			114090			Not used in all models
L44	Horiz. Lin.	5.8Ω		114084			Tap@ 1.7Ω
L45	Horiz. Size	2.3Ω		114105			
L46	Line Choke			114696			Models 116 series.

FUSES

ITEM No.	TYPE	RATING	REPLACEMENT DATA: STROM-CARL PART No. FUSE	REPLACEMENT DATA: STROM-CARL PART No. HOLDER	REPLACEMENT DATA: LITTELFUSE PART No. FUSE	REPLACEMENT DATA: LITTELFUSE PART No. HOLDER	REMARKS
M1	3AG	.250			312.250	357001	

MISCELLANEOUS

ITEM No.	PART NAME	STROM-CARL PART No.	NOTES
M2	RF Tuner		
M3	Switch		Function (High Band-Low Band-Phono)
M4	Ion Trap	114645	
B2	Trimmer	110047	Horizontal Drive (30-273MMF)

DISASSEMBLY INSTRUCTIONS

1. Remove eight push-on type control knobs.
2. Remove eight wood screws holding rear cover in place. Remove rear cover.
3. Disconnect speaker.
4. Remove four metal screws from chassis. Remove chassis.

NOTE: FOR PICTURE TUBE REMOVAL, IT IS NECESSARY TO REMOVE THE CHASSIS AS OUTLINED ABOVE.

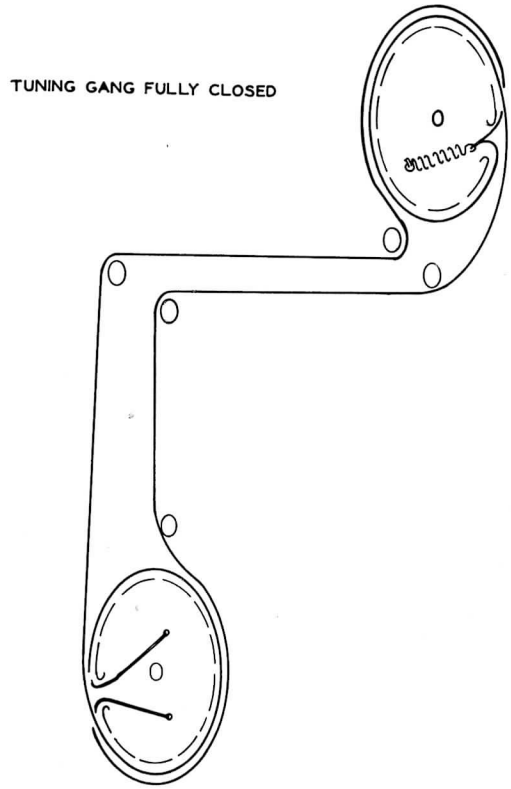

DIAL CORD STRINGING